Booklet available in English on
Heft in deutscher Sprache erhältlich auf
Livret disponible en français sur
Libretto disponibile in italiano su
Folleto en español disponible en
如需中文版手册，请访问

FR

DONNEZ
OU
RECYCLEZ

ASSOCIATION
OU
MAGASIN
OU
DÉCHÈTERIE

Adresses sur quefairedemesdechets.fr

LEGO.com/sustainable-packaging

LEGO® VIP

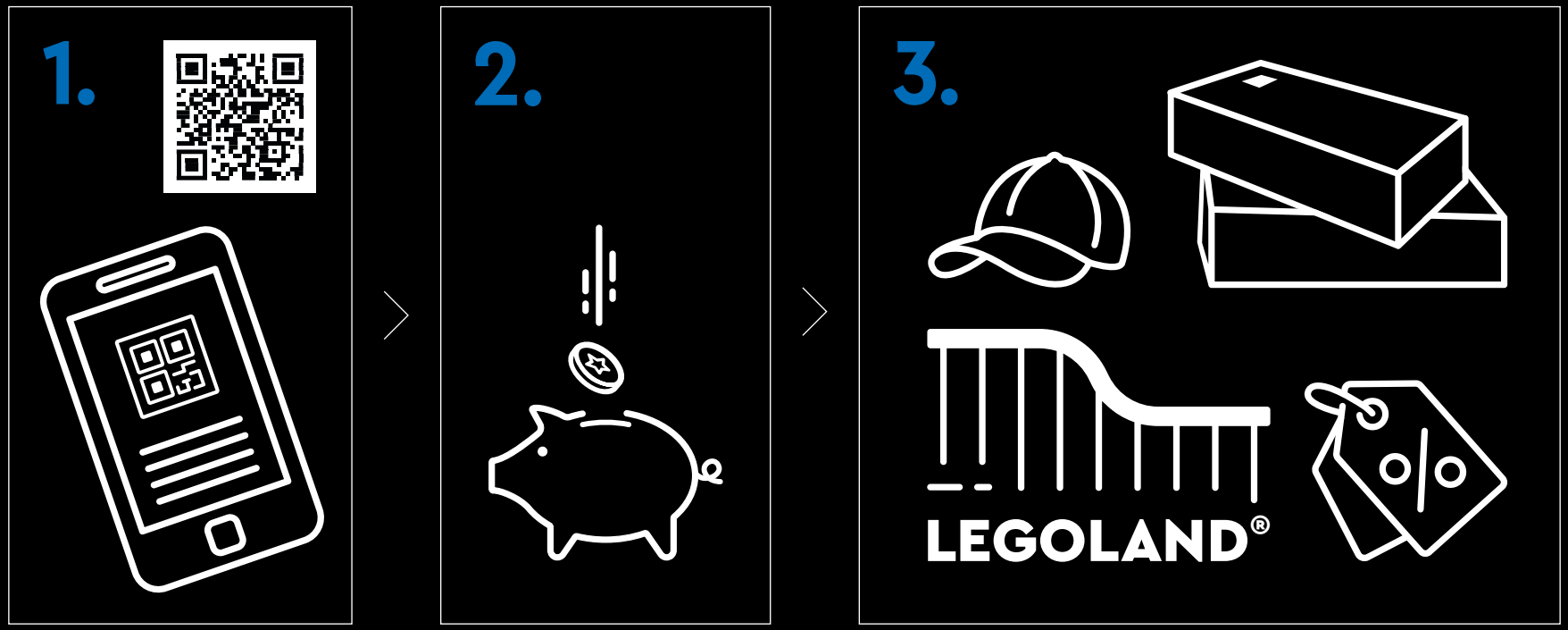

1. Sign up **2.** Earn points for purchases **3.** Redeem points for rewards, experiences, discounts & more | **1.** Melde dich an **2.** Sammle Punkte bei jedem Kauf **3.** Löse die Punkte für Belohnungen, Erlebnisse, Rabatte und Ähnliches ein | **1.** Inscrivez-vous **2.** Gagnez des points lors de vos achats **3.** Échangez vos points contre des récompenses, des expériences, des remises et bien plus encore | **1.** Iscriviti **2.** Guadagna punti con i tuoi acquisti **3.** Riscatta punti per premi, esperienze, sconti e altro ancora | **1.** Regístrate **2.** Gana puntos por tus compras **3.** Canjea puntos por recompensas, experiencias, descuentos y mucho más | **1.** Registe-se **2.** Ganhe pontos em compras **3.** Troque os pontos para prémios, experiências, descontos e muito mais | **1.** 注册 **2.** 购物赚积分 **3.** 用积分兑换奖励、体验、折扣等 | **1.** Zarejestruj się **2.** Zdobywaj punkty za zakupy **3.** Wymieniaj punkty na rabaty, przygody i inne nagrody | **1.** Zaregistrujte se **2.** Sbírejte body za nákupy **3.** Vyměňujte body za odměny, zážitky, slevy a spoustu dalšího | **1.** Zaregistrujte sa **2.** Získavajte body za nákupy **3.** Uplatnite si body a získajte odmeny, rôzne zážitky, zľavy a ešte viac | **1.** Regisztrálj **2.** Szerezz pontokat minden vásárlással **3.** Váltsd be pontjaidat jutalmakra, élményekre, kedvezményekre és egyebekre | **1.** Înscrie-te **2.** Câştigă puncte pentru achiziții **3.** Valorifică puncte pentru recompense, experiențe, reduceri și multe altele | **1.** Регистрирайте се **2.** Получавайте точки за покупки **3.** Използвайте точките за награди, услуги, отстъпки и т.н. | **1.** Reģistrējies **2.** Pelni punktus par pirkumiem **3.** Izmanto punktus, lai saņemtu balvas, izklaides iespējas, atlaides un daudz ko citu | **1.** Registreeru **2.** Teeni ostude eest punkte **3.** Lunasta punktide eest preemiad, elamused, allahindlused ja muu | **1.** Užsiregistruokite **2.** Pelnykite taškų už pirkinius **3.** Panaudokite taškus atlygiui, funkcijoms, nuolaidoms ir ne tik

FROM THE DESIGN TEAM

'We designed the 1:10 scale model based on the real car. It was a great pleasure to work so closely with the PEUGEOT Sport team, while they were in the middle of their development, too. We even went to a private test session at the Magny-Cours racetrack. We first created a concept version, then added details and functions as the real car evolved, like the unique suspension, electric "wiring" and glow-in-the-dark effects for 24-hour racing.'

-Kasper René Hansen, LEGO® Technic designer

KASPER HANSEN
Designer
LEGO® Technic

A NEW ERA FOR PEUGEOT RACING

'I am very impressed by the high resemblance between the LEGO® Technic PEUGEOT 9X8 and our racing car! The LEGO design team has worked very closely with our engineers and designers while the racing car was still in its development process, too. Together, we have worked on representing the engine and hybrid system, the interior and exterior design, and our suspension technology in the most realistic way. We are all very proud of this cooperation and the possibility that through this LEGO Technic project, such a global audience is exposed to our PEUGEOT 9X8 Hypercar.'

-Olivier Jansonnie, Technical Director, PEUGEOT Sport

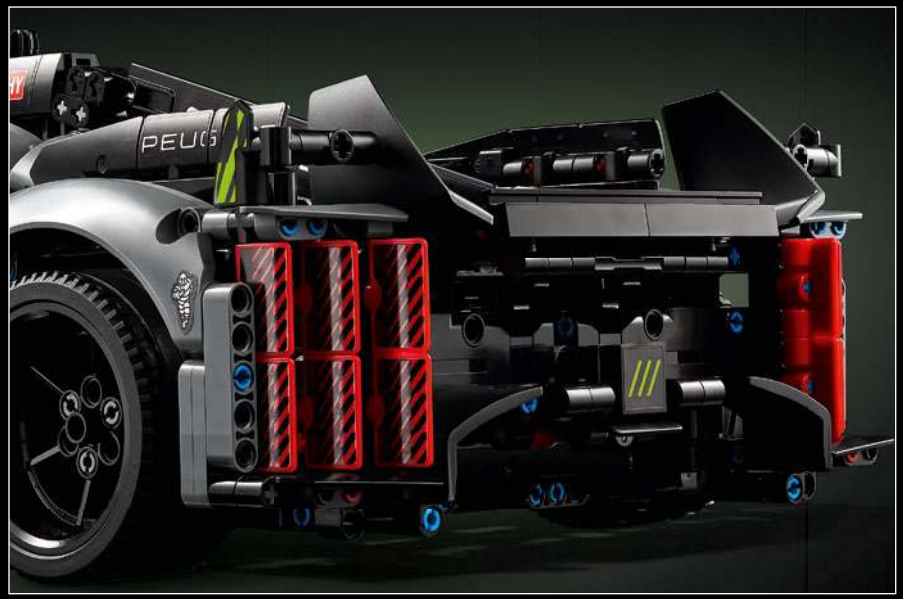

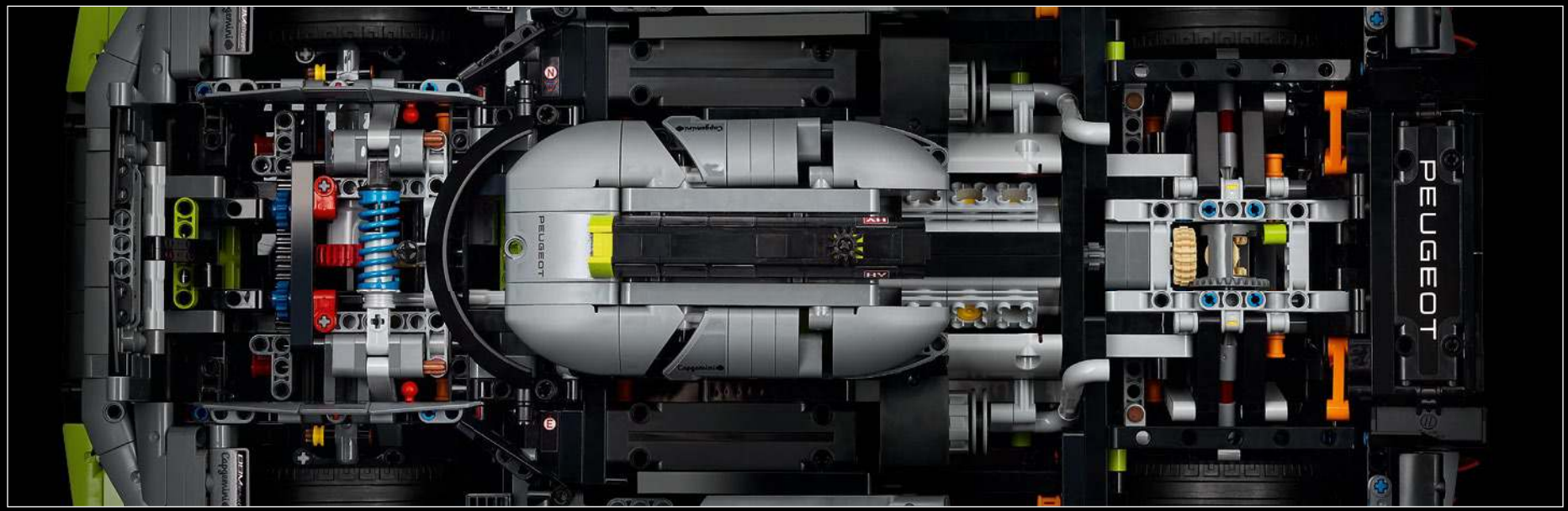
PEUGEOT

STRIKING DESIGNS. PASSION FOR MOTORSPORT. TECHNOLOGICAL EXCELLENCE.

This 1:10 scale model of the PEUGEOT 9X8 was designed to authentically mimic the ground-breaking Hypercar, from its iconic silhouette to technological expertise in the hybridisation of the V6 internal combustion engine.

302 AND 402 DARL'MAT

1937-1938

The 302 and 402 Darl'mat make remarkable debuts in the 24 Hours of Le Mans endurance race. In 1938, the team finishes first in the 2L category and fifth overall.

PEUGEOT 908 HDI FAP

2007-2010

The PEUGEOT 908 HDI FAP, the V12 engine car, returns the PEUGEOT Sport team to the 24 Hours of Le Mans, securing second place in both 2007 and 2008, and a double win in 2009.

1937 **1991** **2007** **2011**

PEUGEOT 905

1991-1993

The PEUGEOT 905 enters in the 24 Hours of Le Mans from 1991 to 1993, giving PEUGEOT its first win in the race in 1992, following up with a historic triple win in 1993.

PEUGEOT 908

2011

PEUGEOT 908, the V8 engine car, won five victories in seven races. At the 2011 24 Hours of Le Mans, the team was only 13 seconds from victory, finishing in 2nd, 3rd and 4th places.

HIGHLIGHTS FROM PEUGEOT HISTORY IN 24 HOURS OF LE MANS

PEUGEOT 9X8 HYPERCAR

As 24 Hours of Le Mans celebrates 100 years of endurance racing, PEUGEOT enters the 9X8 Hypercar in the new Le Mans Hybrid class race.

PEUGEOT
93
PEUGEOT
9X8
PEUGEOT

PEUGEOT
93
PEUGEOT
PEUGEOT
Capgemini
MICHELIN
PEUGEOT
93

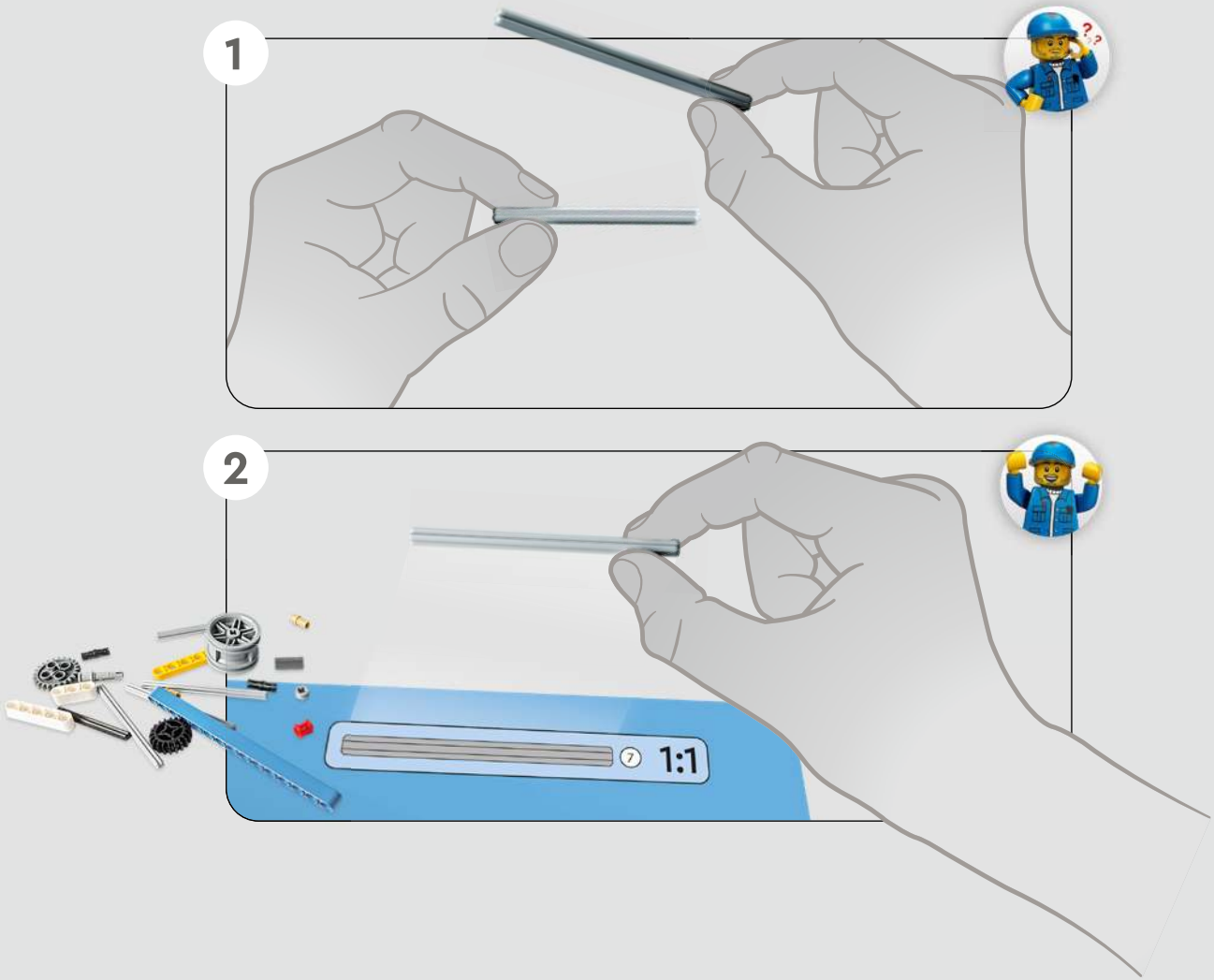
1
2
1:1

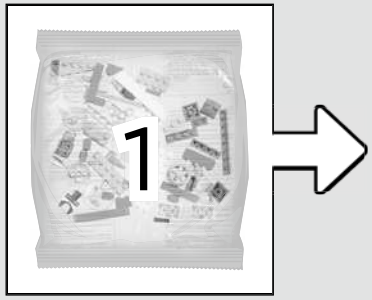
1

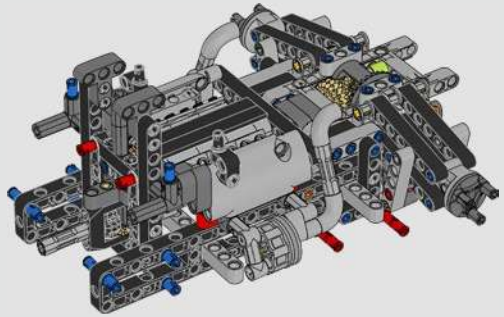

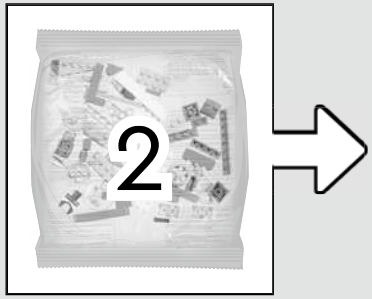
2

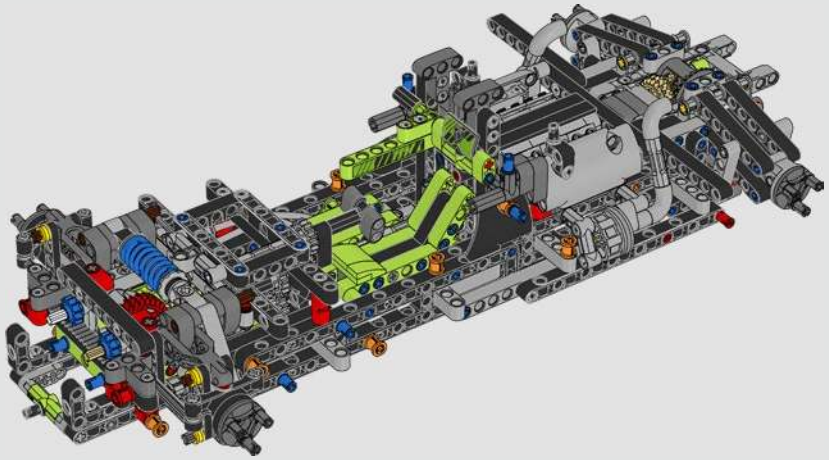

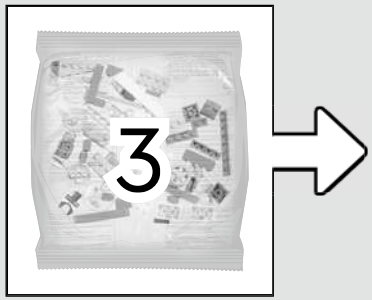
3

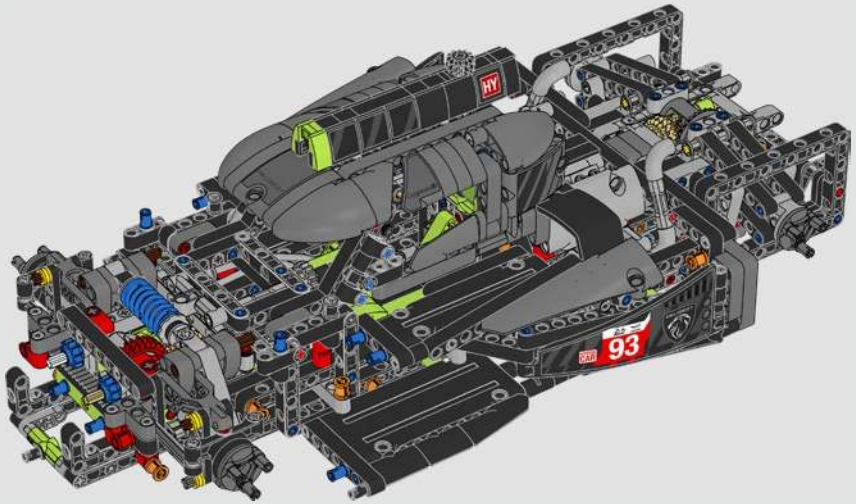
HY
93

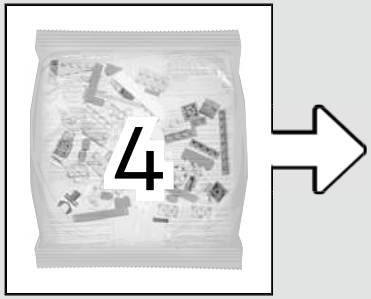
4

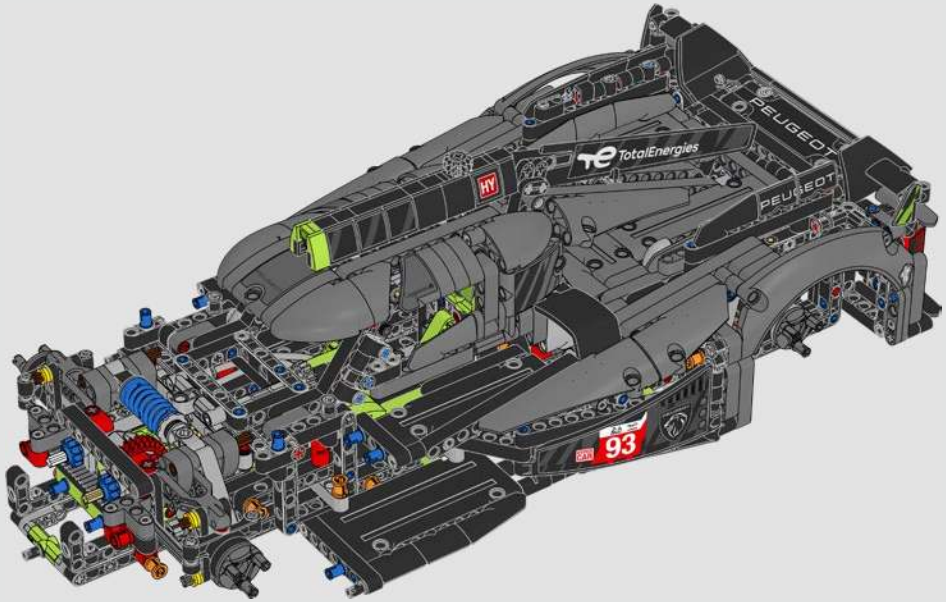
TotalEnergies
PEUGEOT
PEUGEOT
HY
93

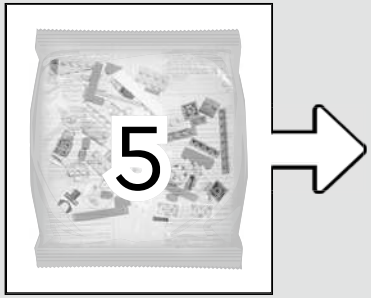
5

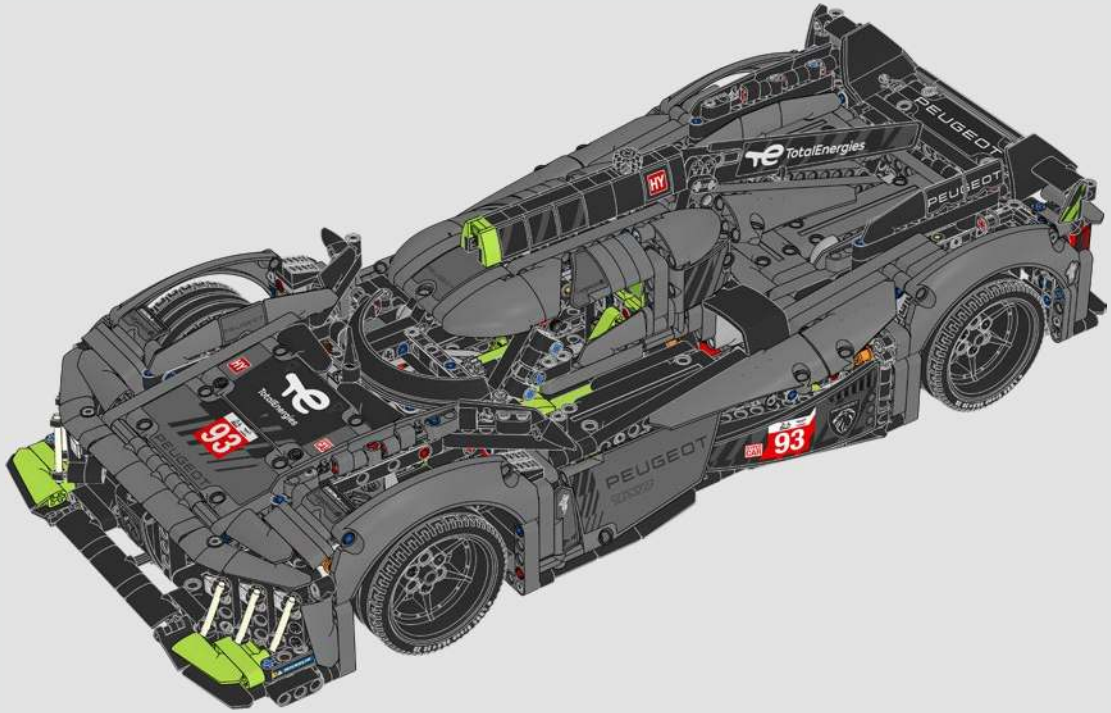
TotalEnergies
PEUGEOT
PEUGEOT
HY
93
PEUGEOT
93

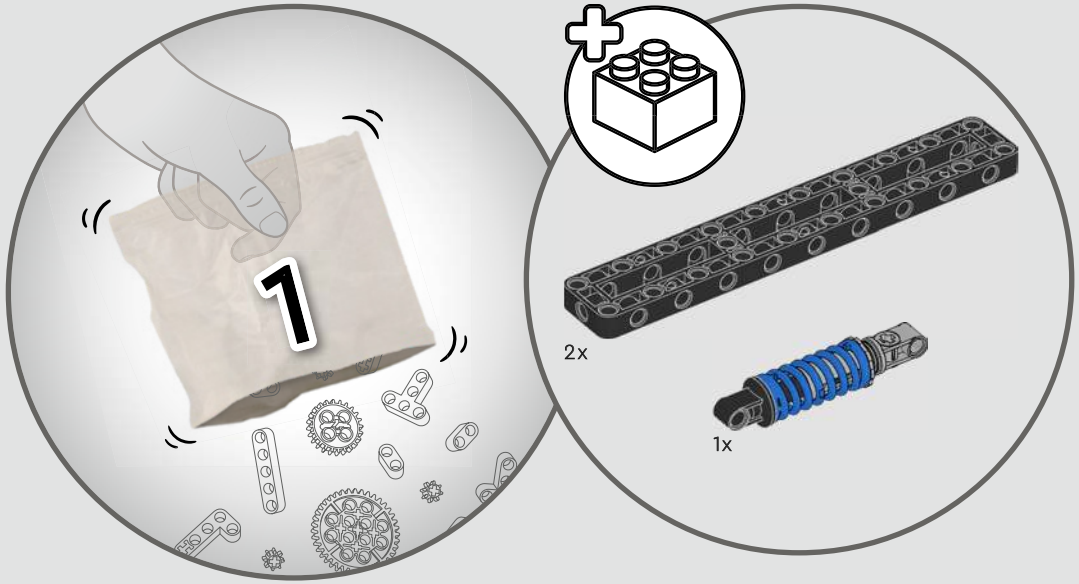

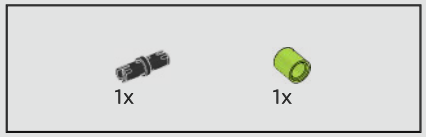

1

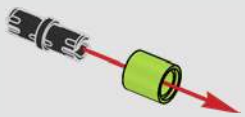

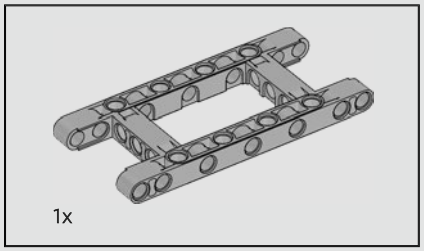

2

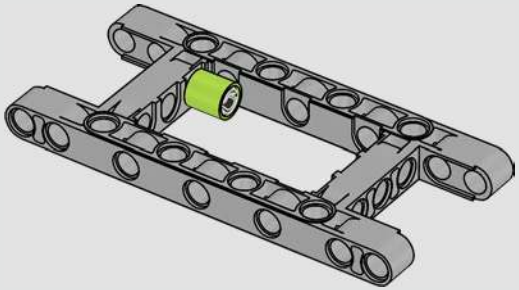

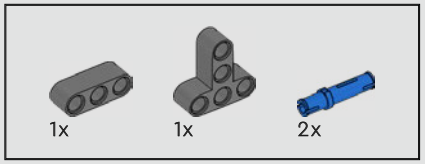

3

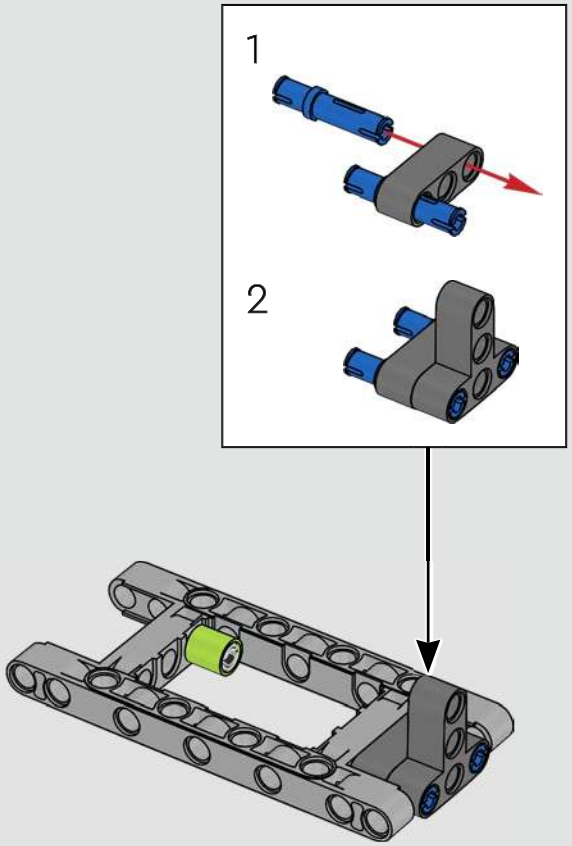

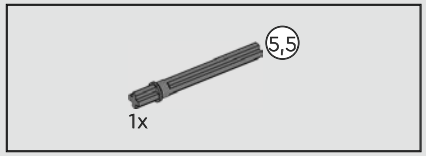

4

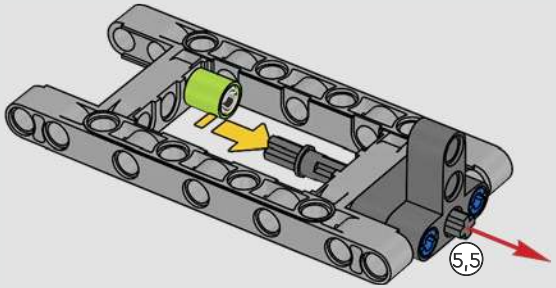

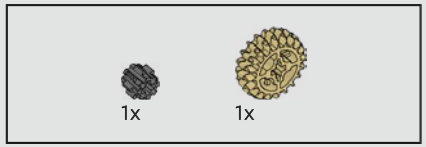

5

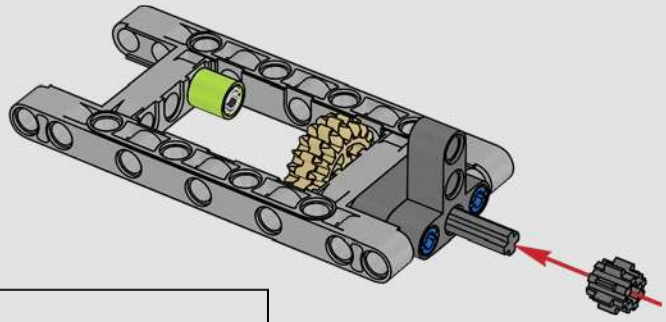

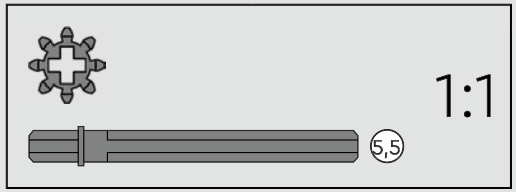

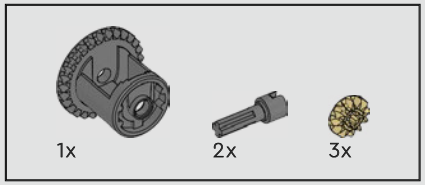

6

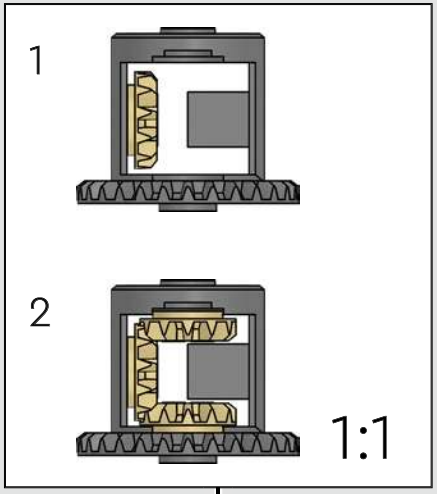

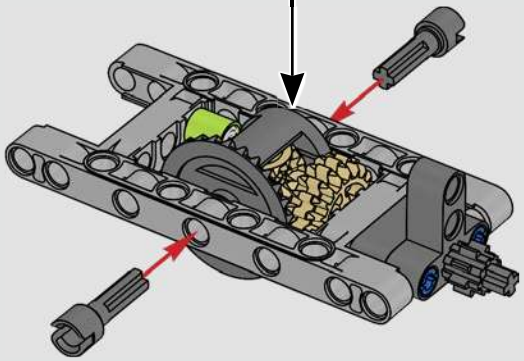

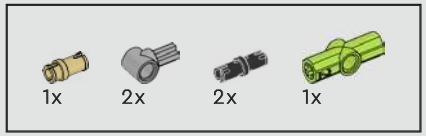

7

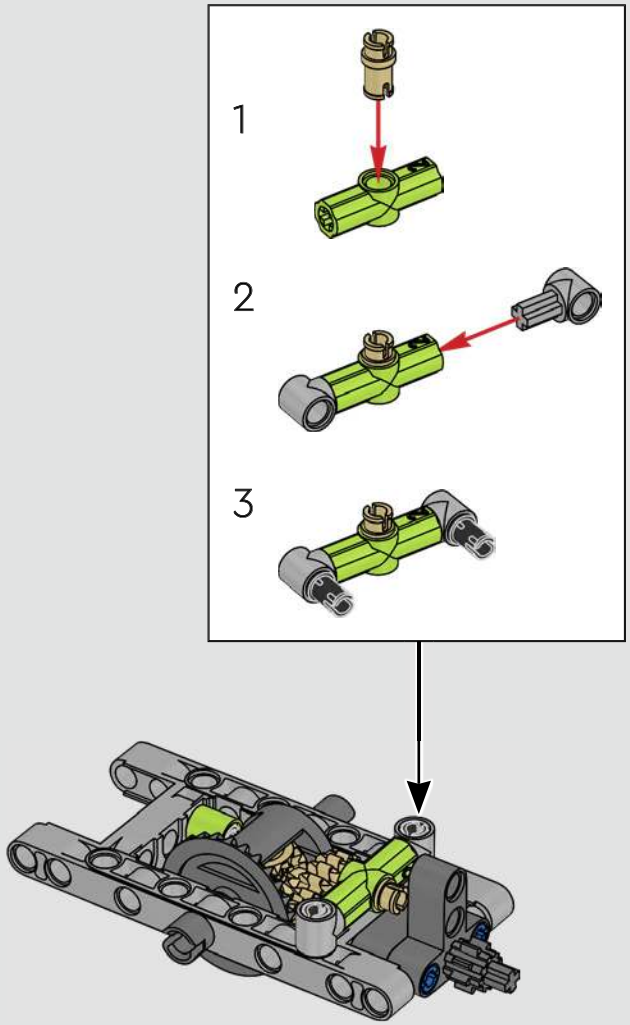

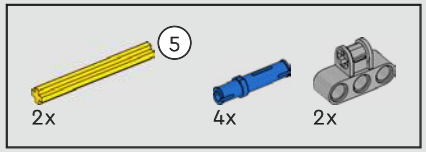

8

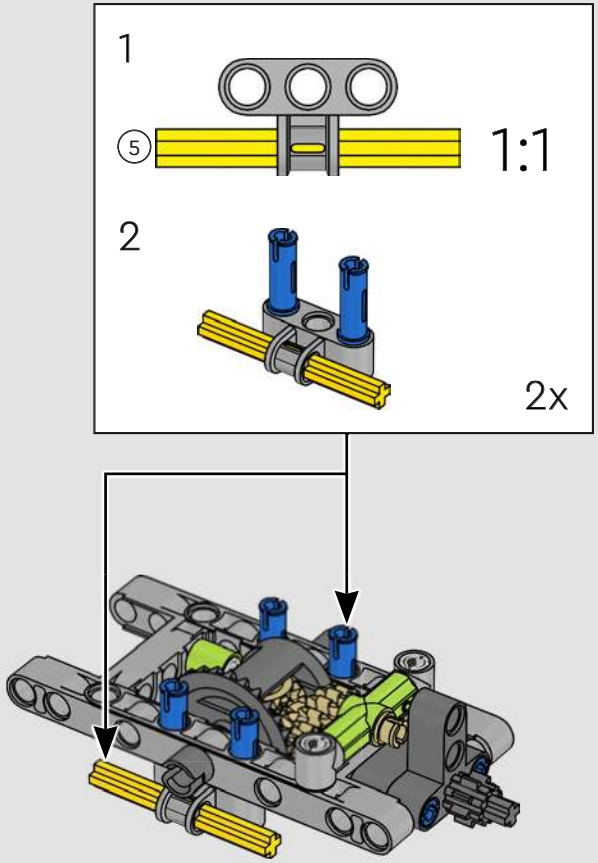

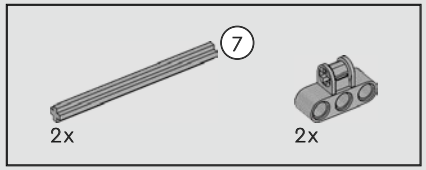

9

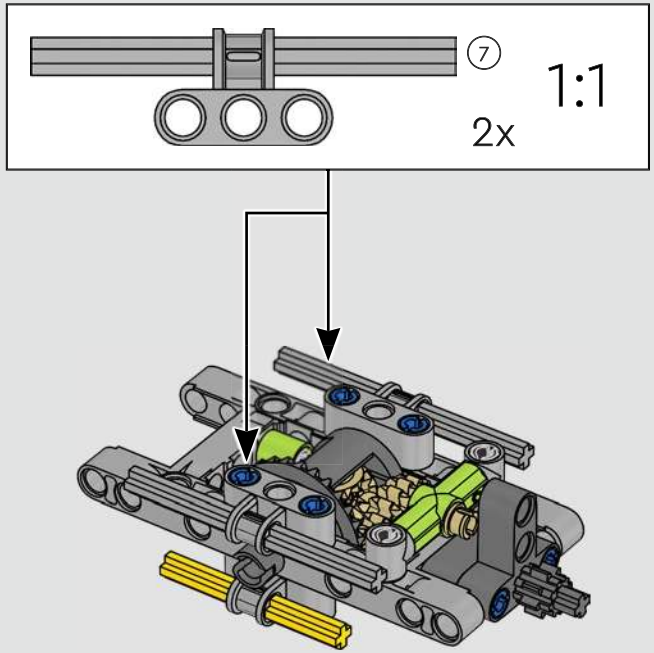

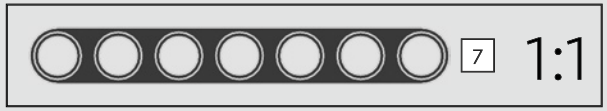

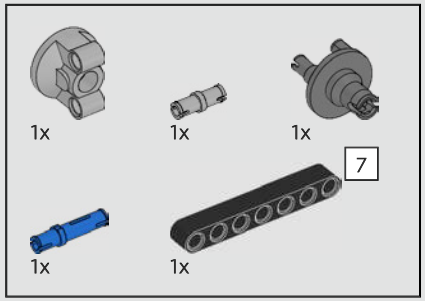

10

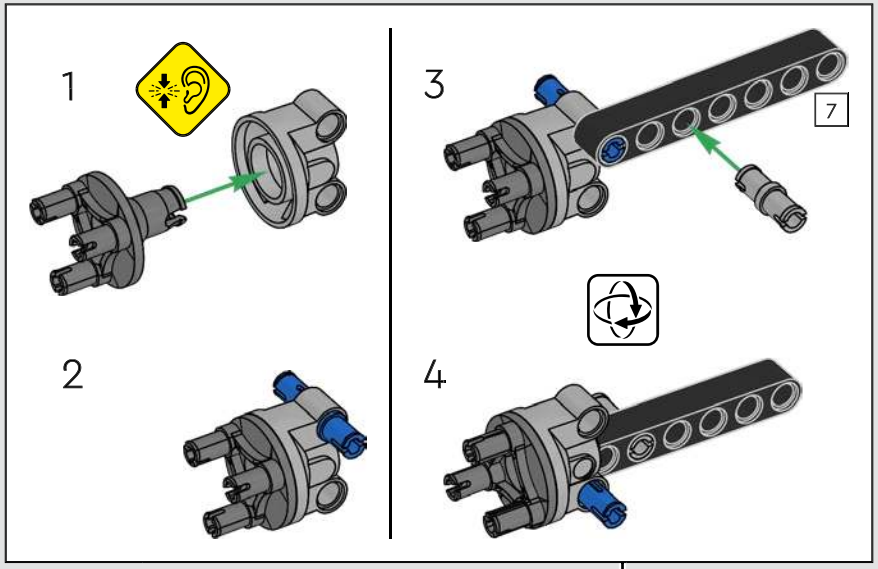

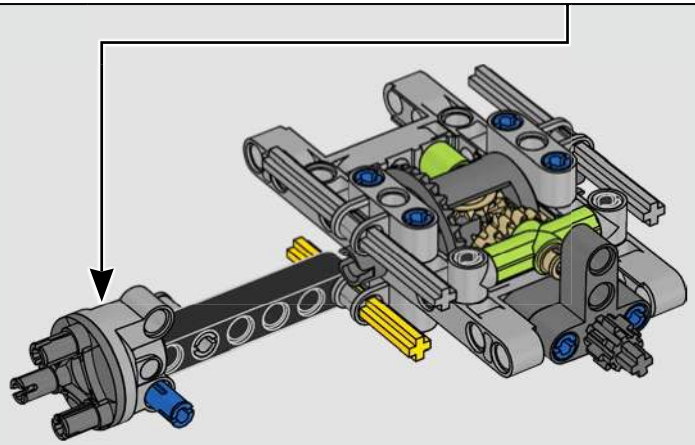

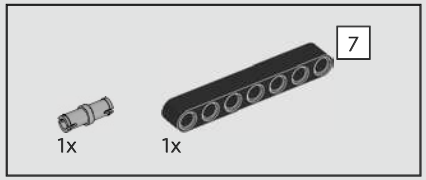

11

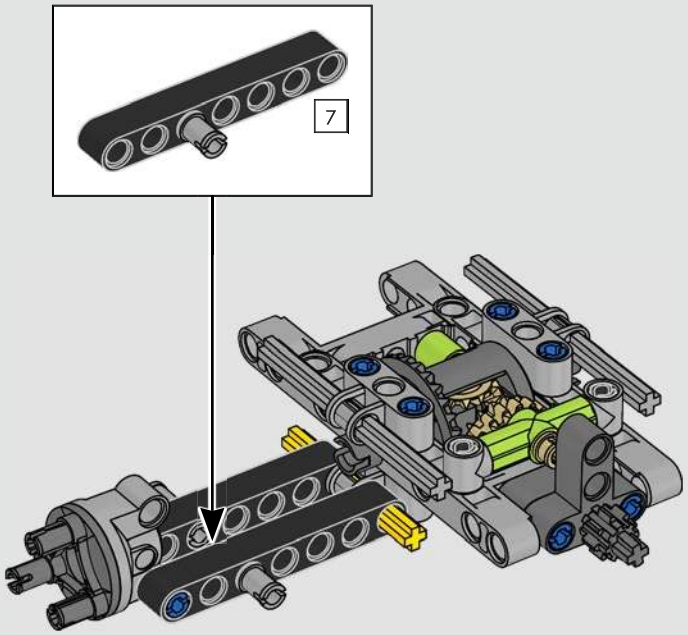

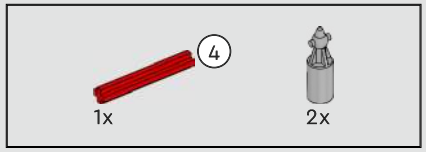

12

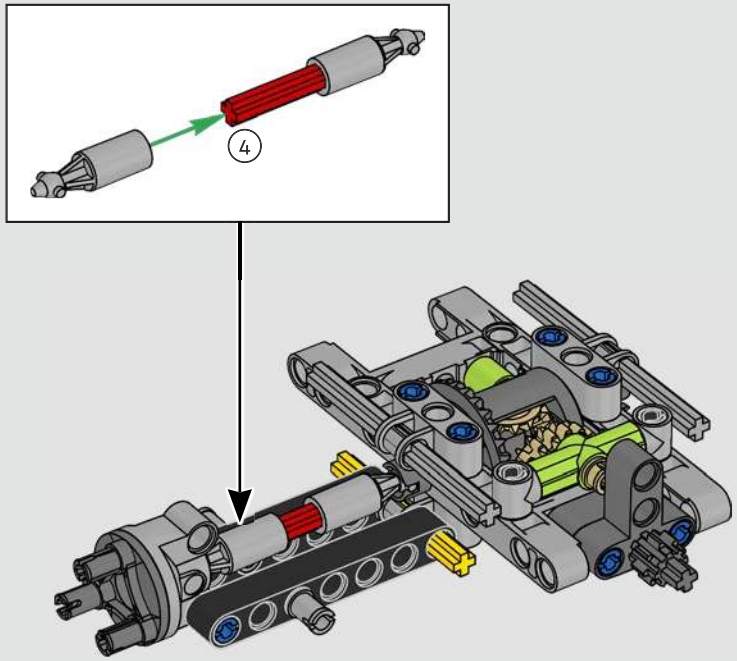

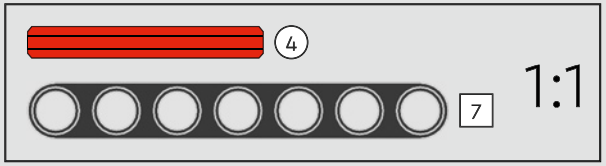

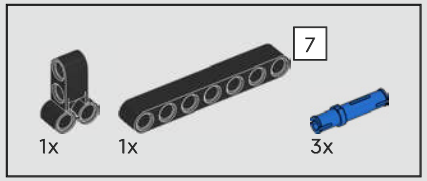

13

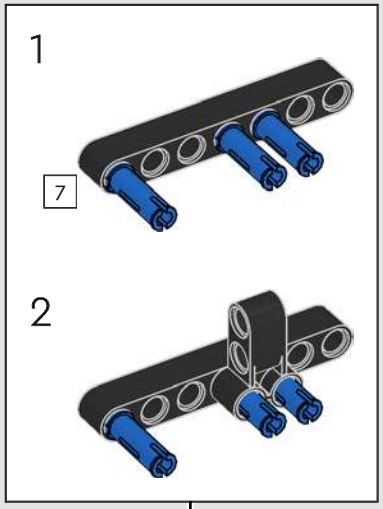

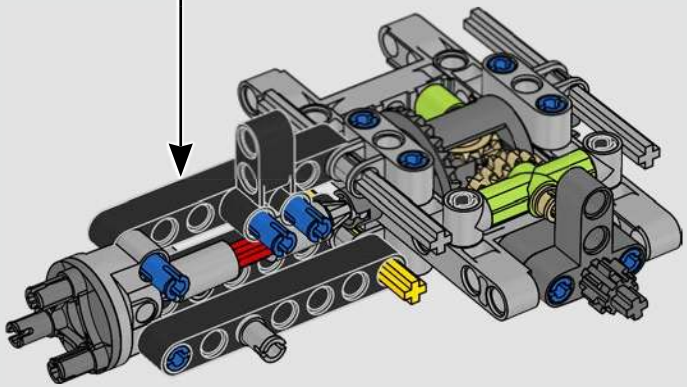

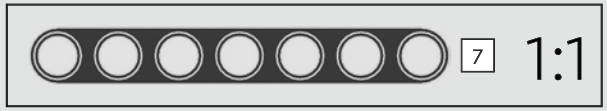

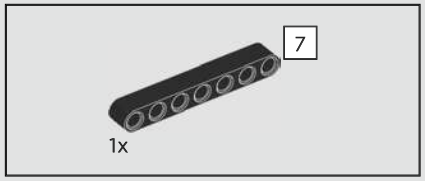

14

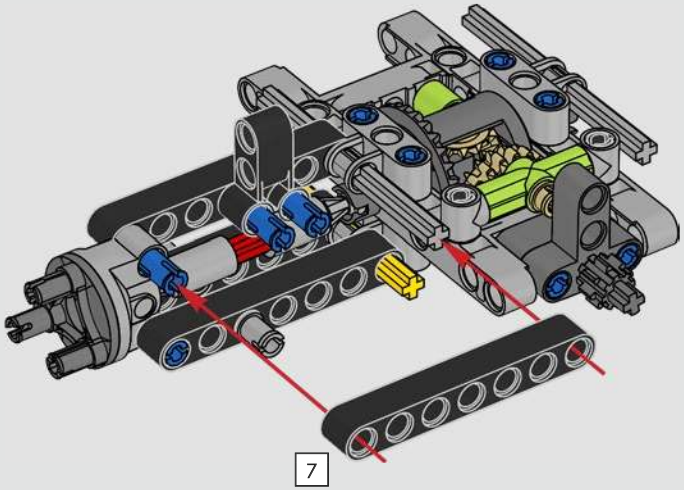

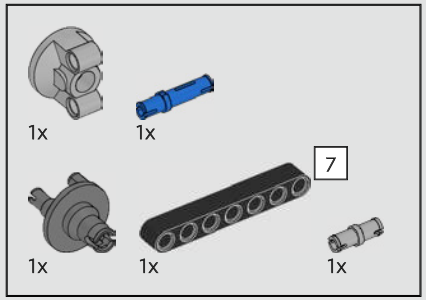

15

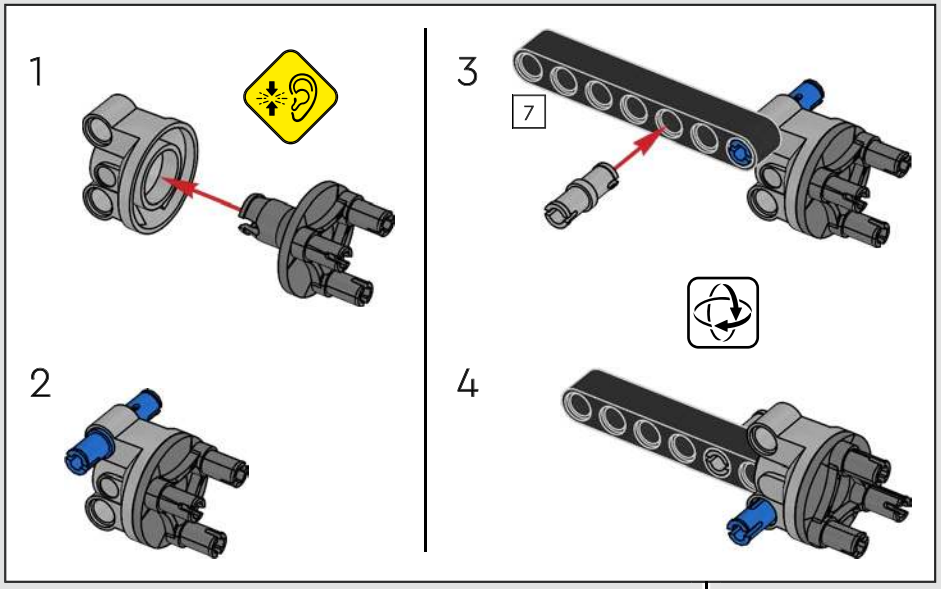

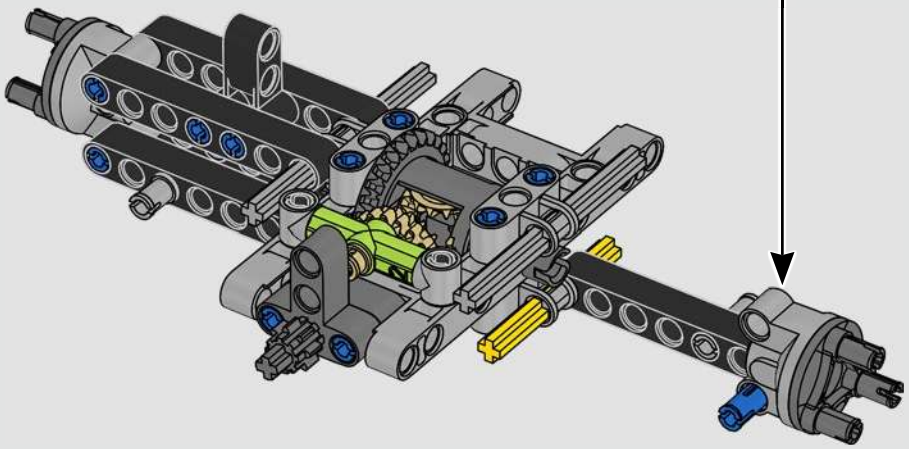

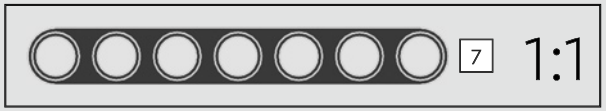

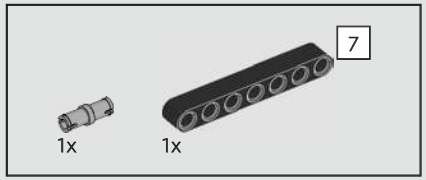

16

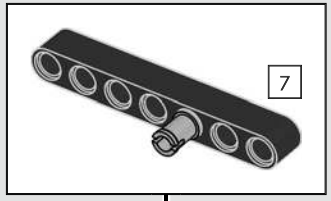

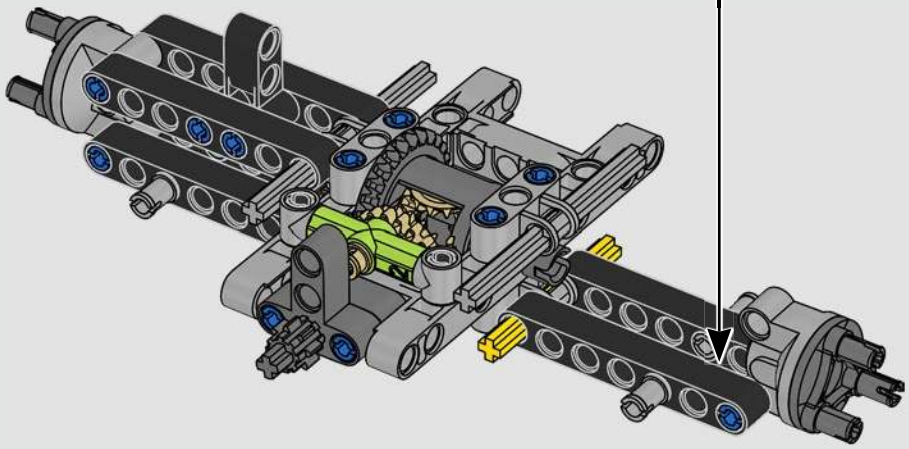

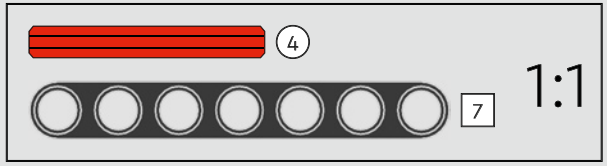

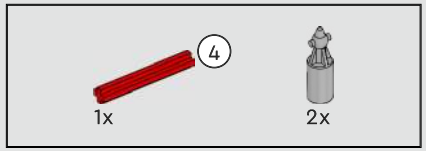

17

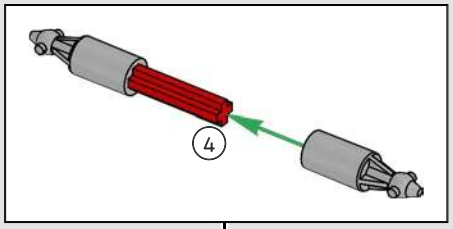

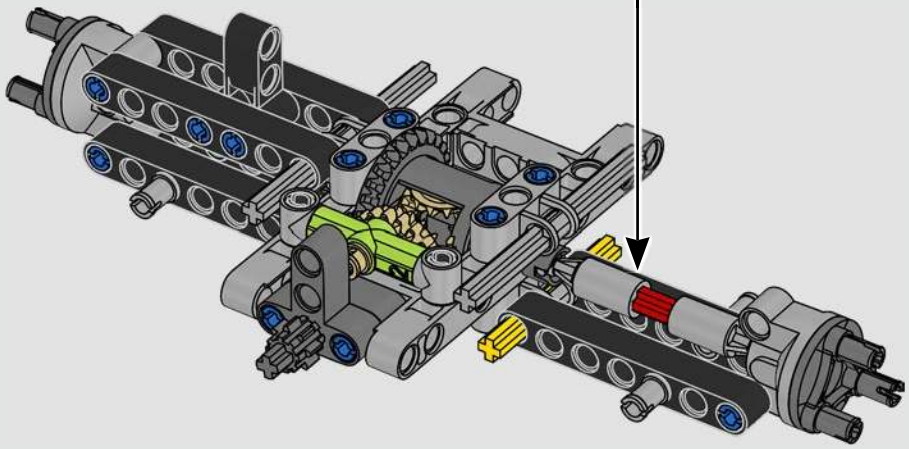

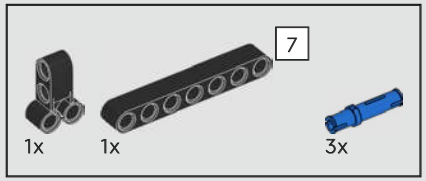

18

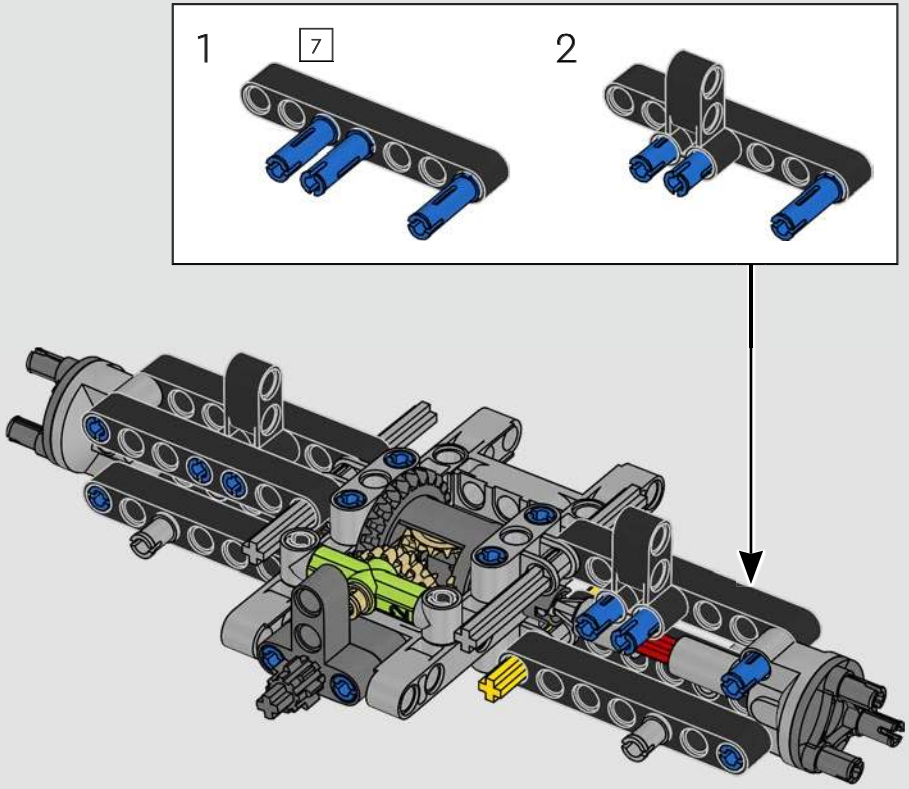

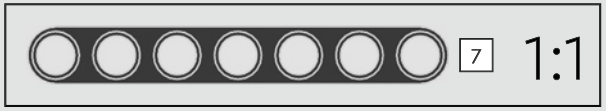

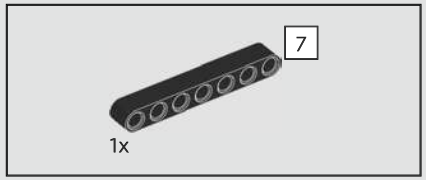

19

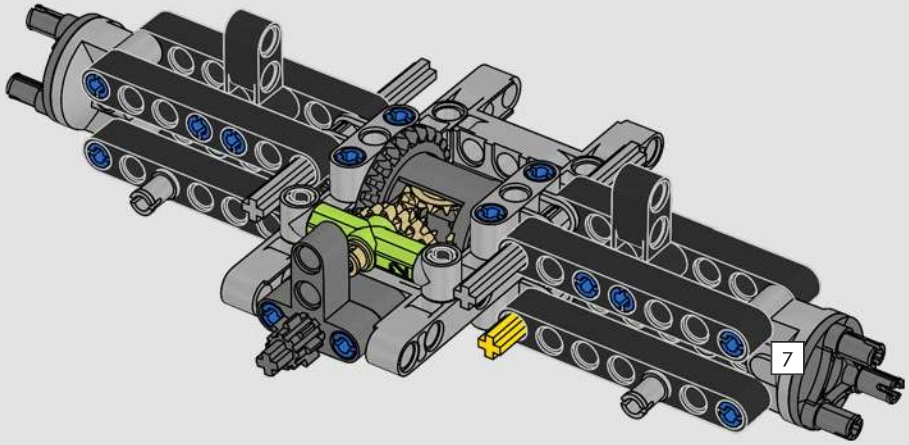

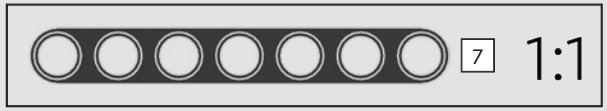

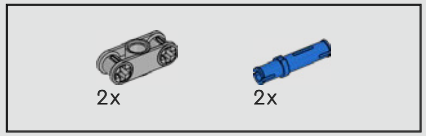

20

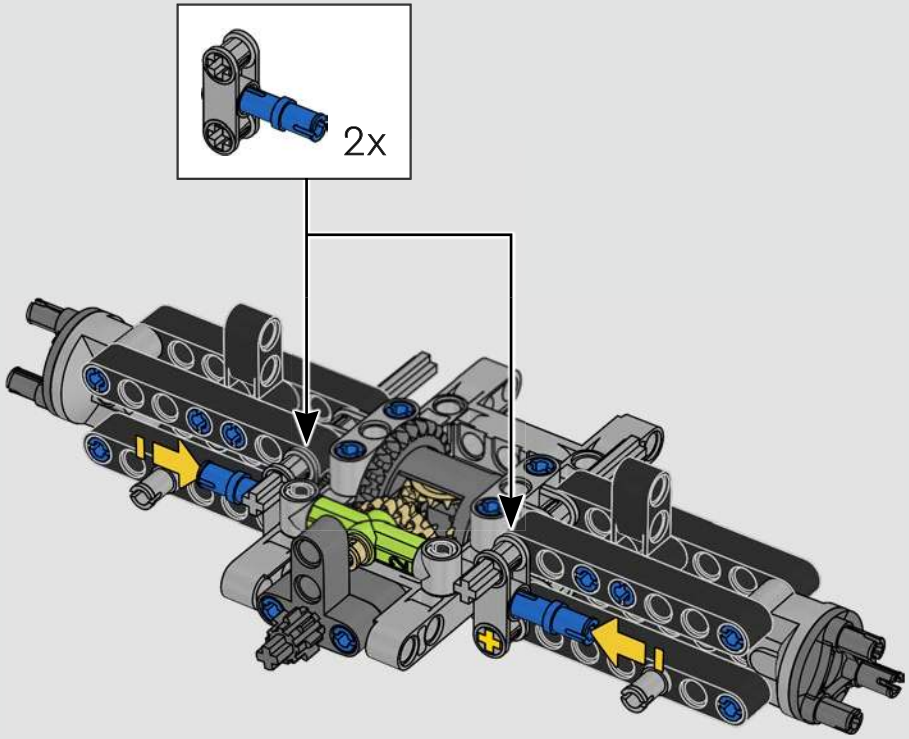

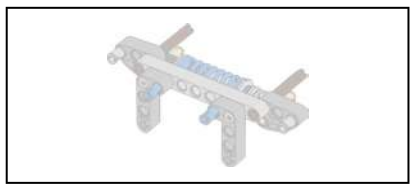

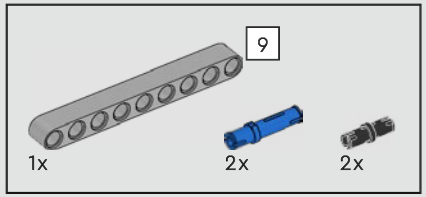

21

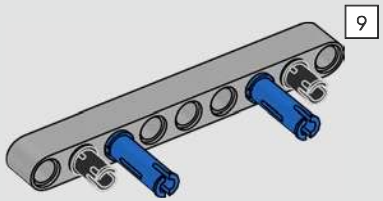

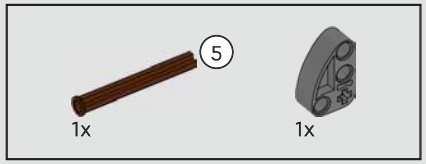

22

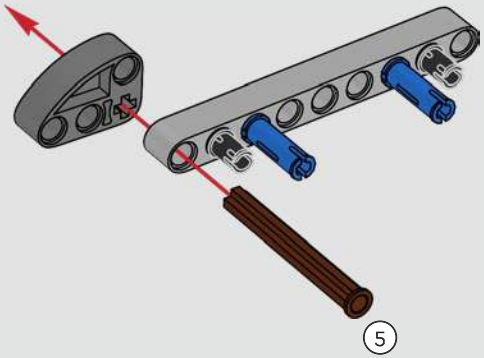

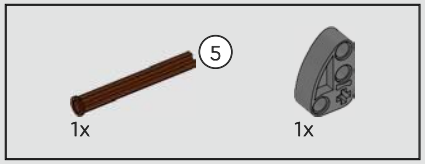

23

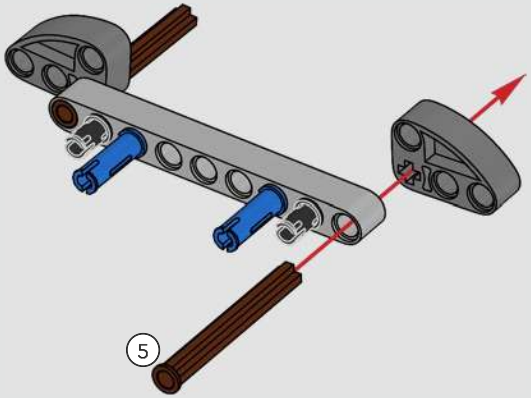

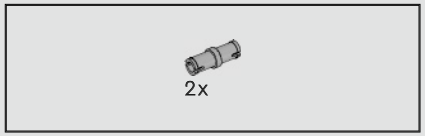

24

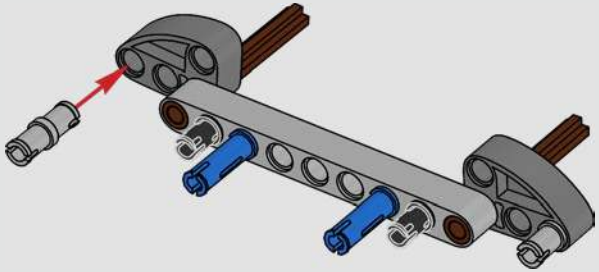

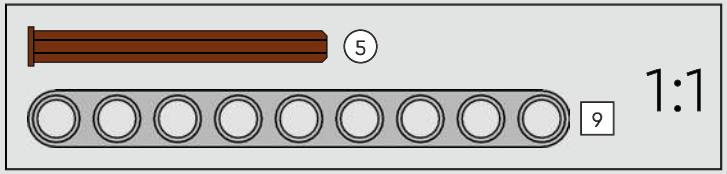

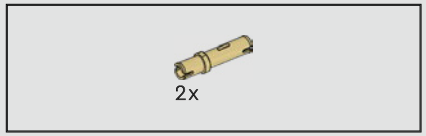

25

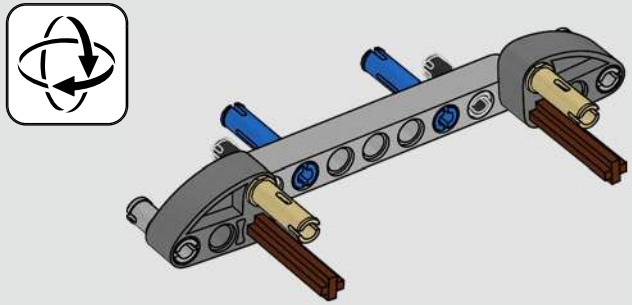

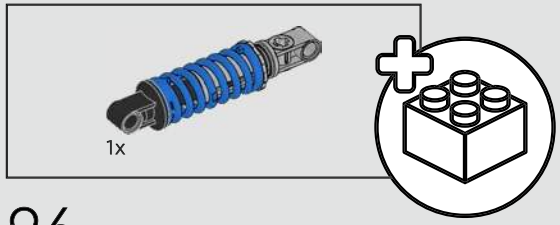

26

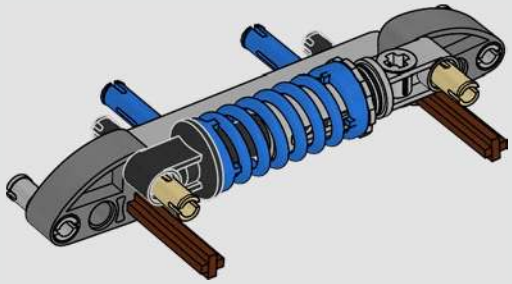

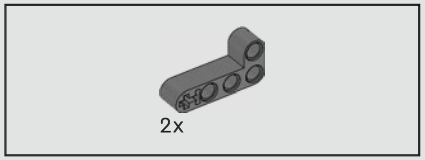

27

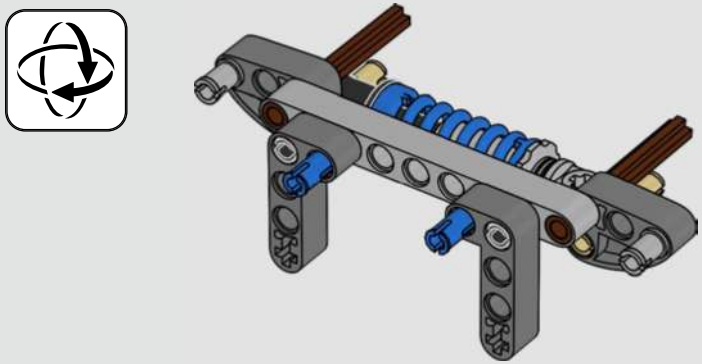

28

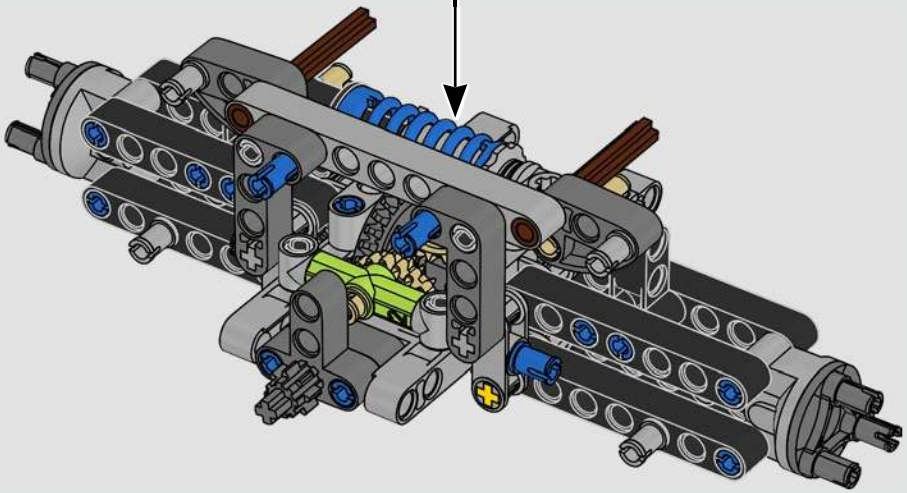

29

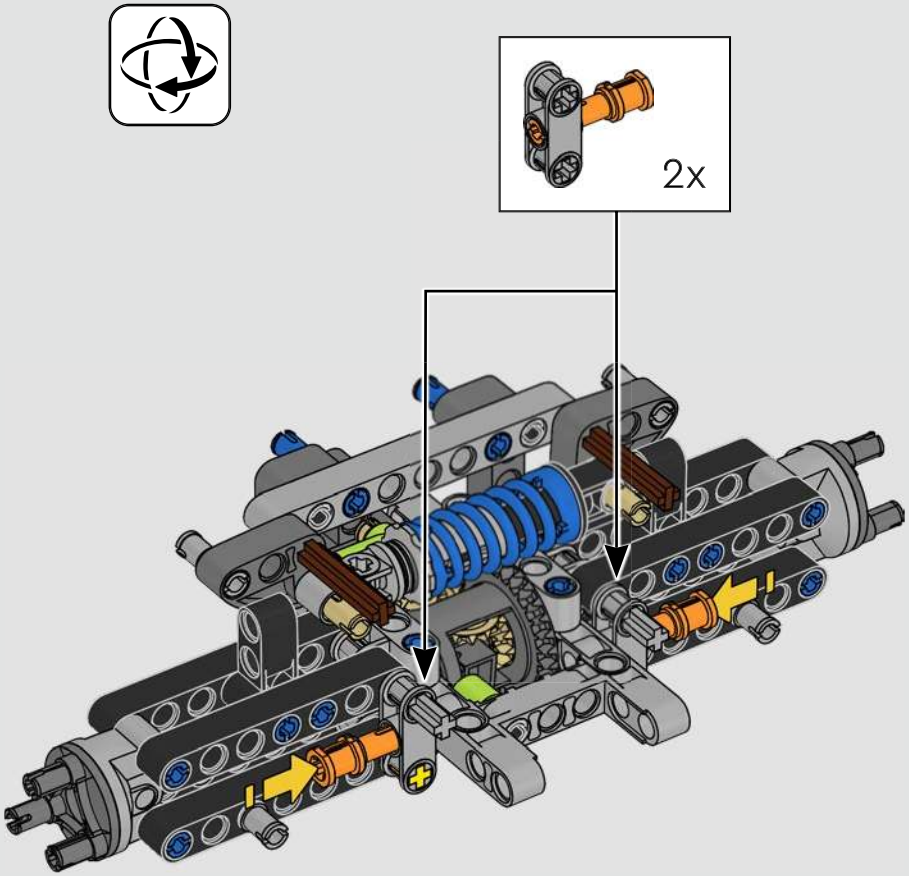

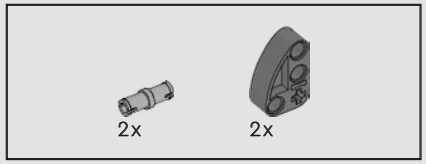

30

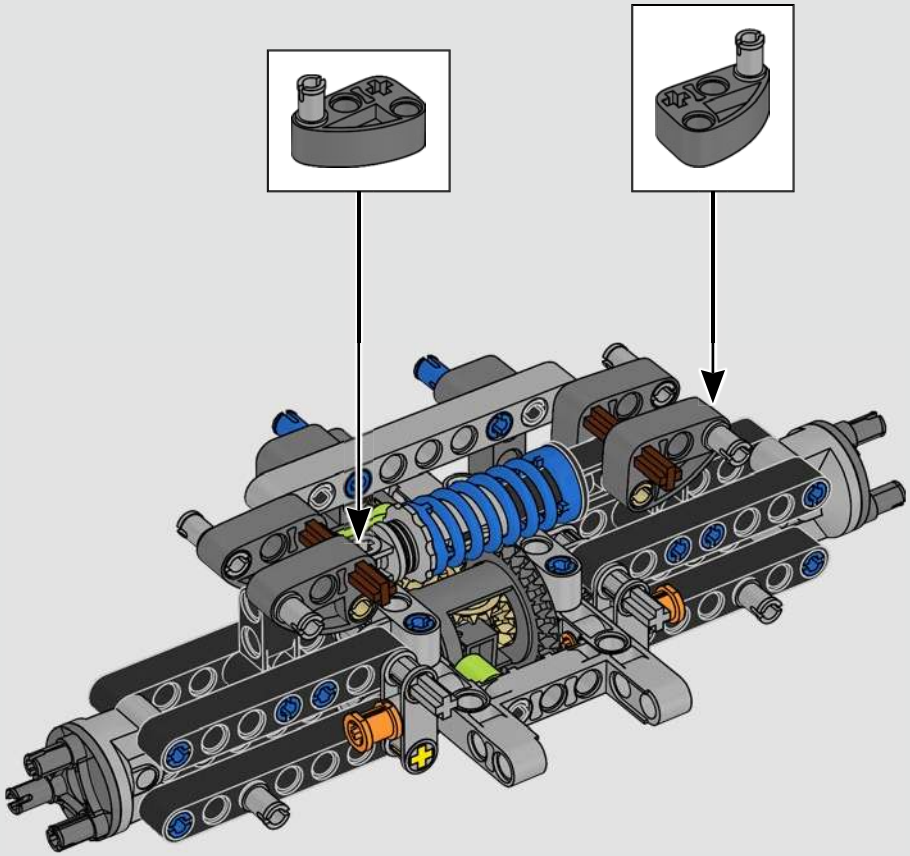

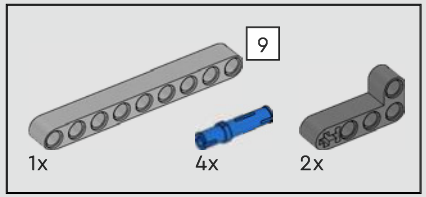

31

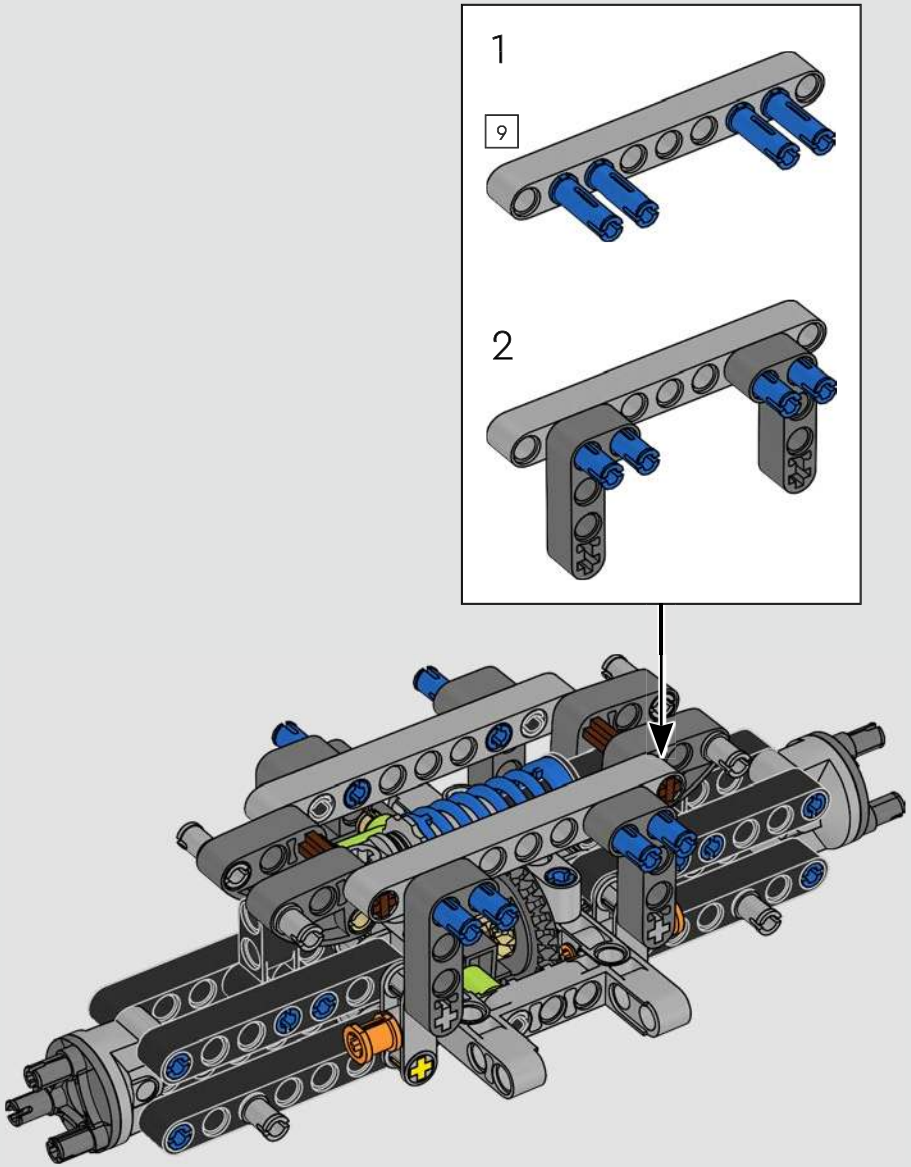

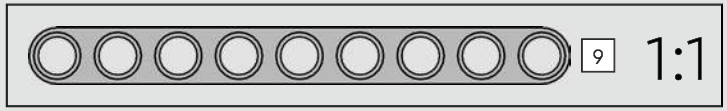

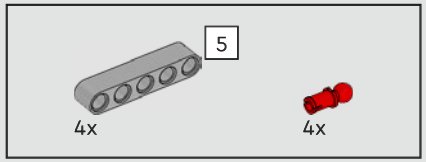

32

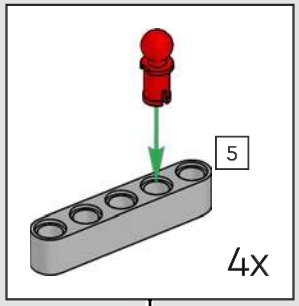

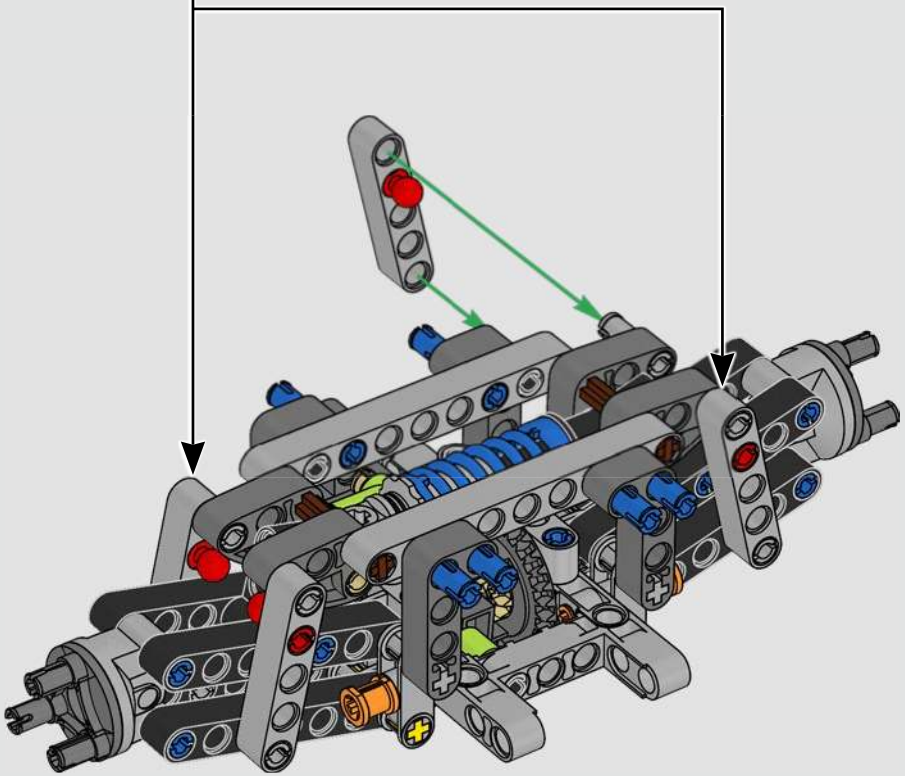

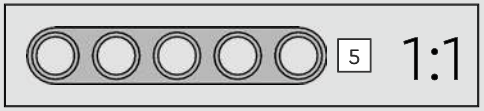

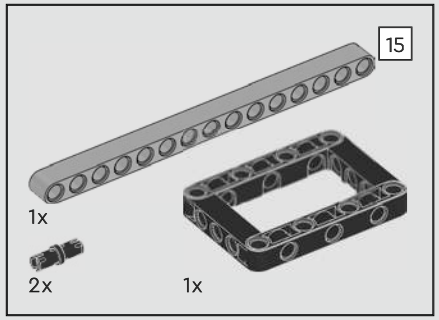

33

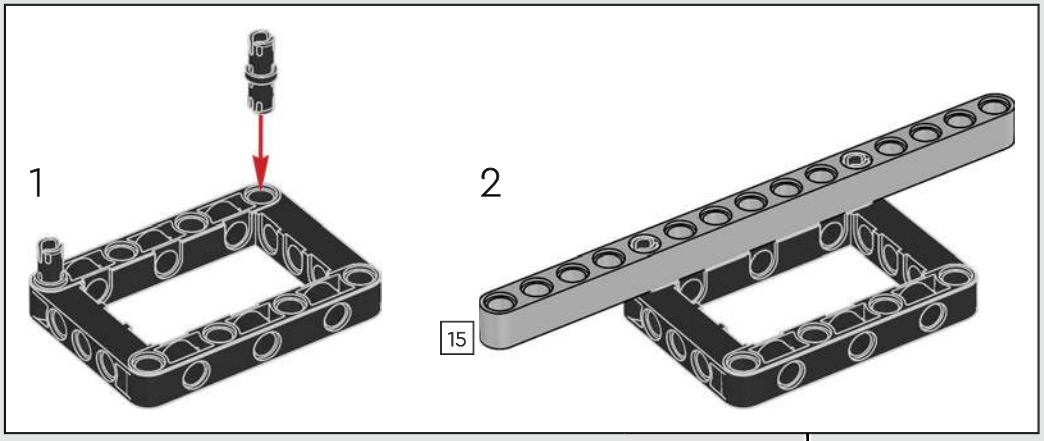

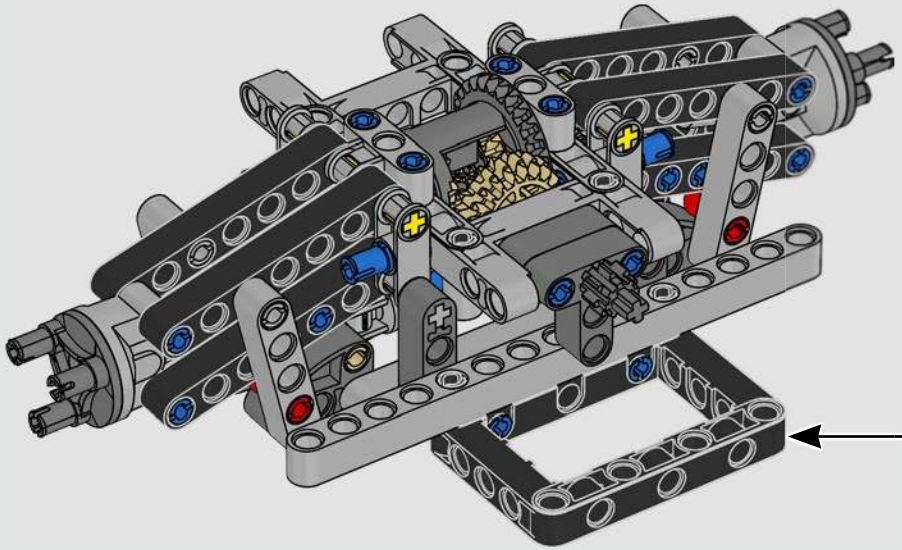

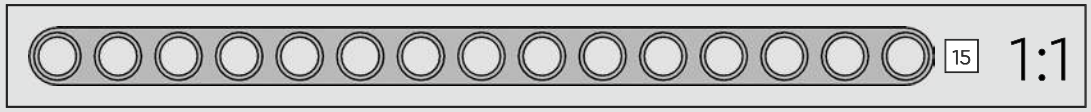

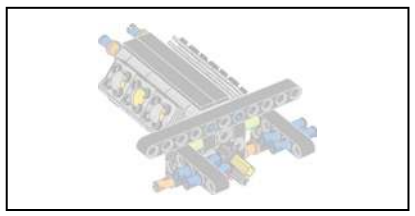

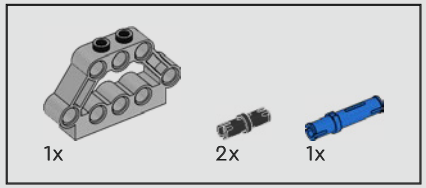

34

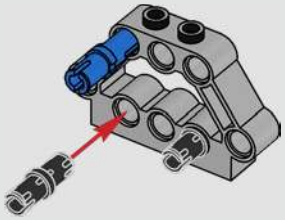

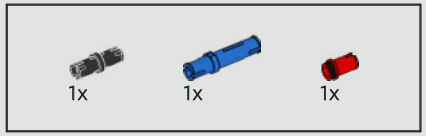

35

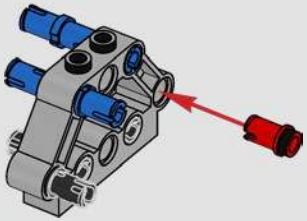

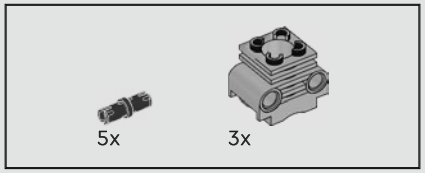

36

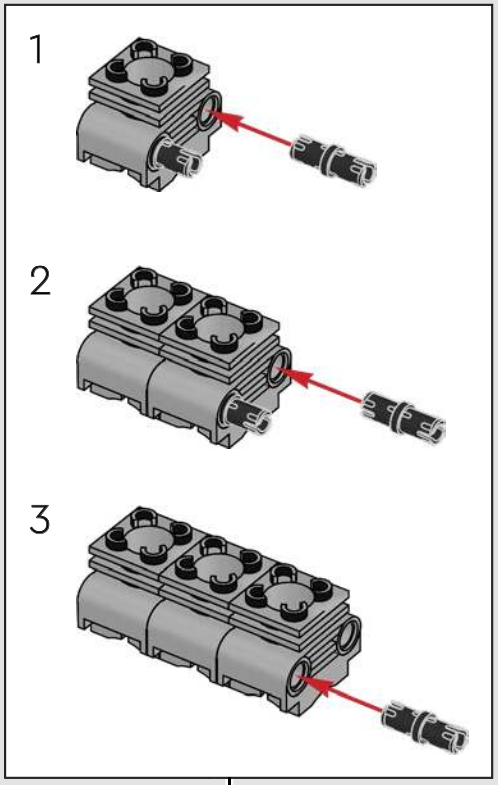

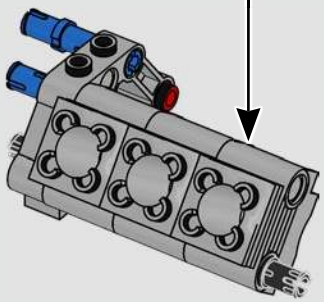

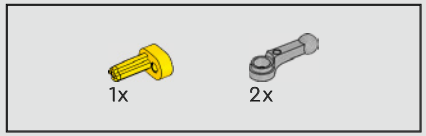

37

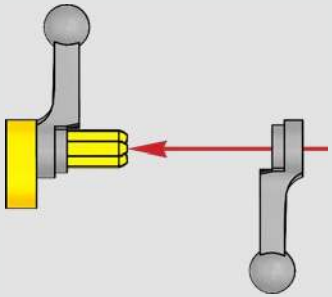

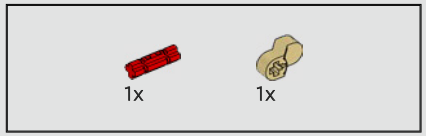

38

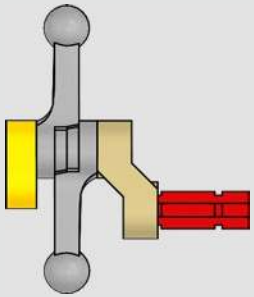

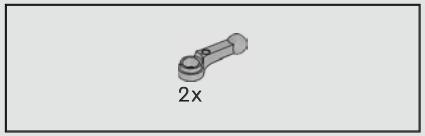

39

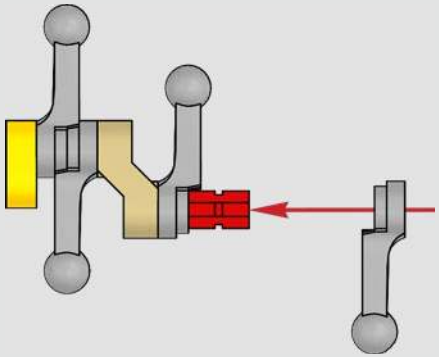

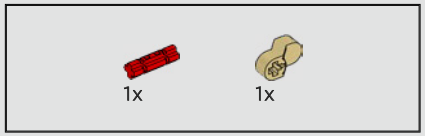

40

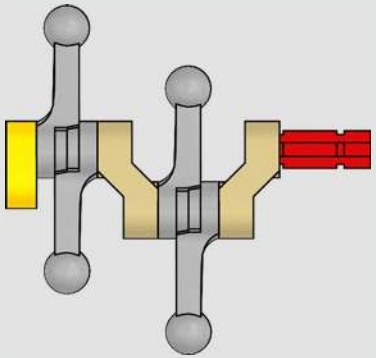

41

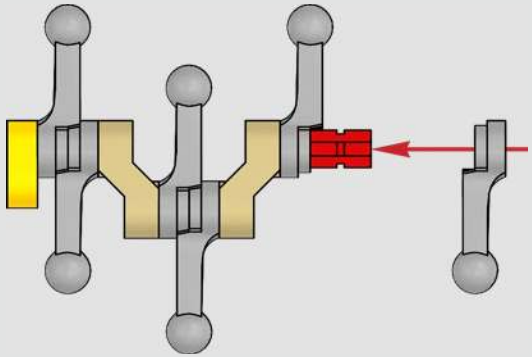

42

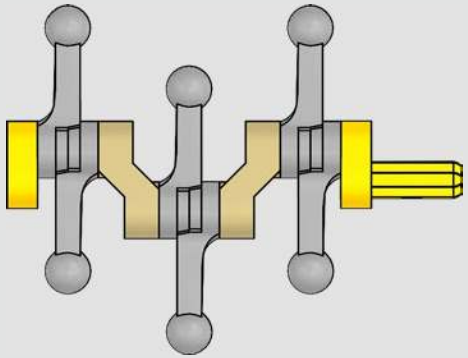

43

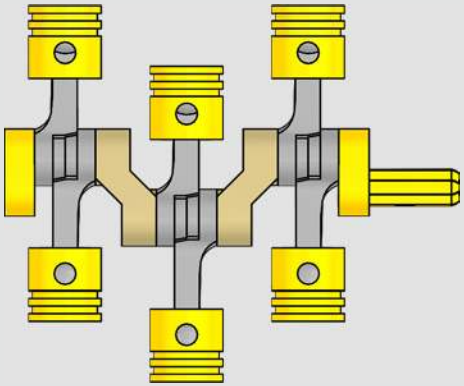

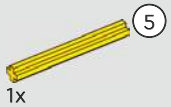

44

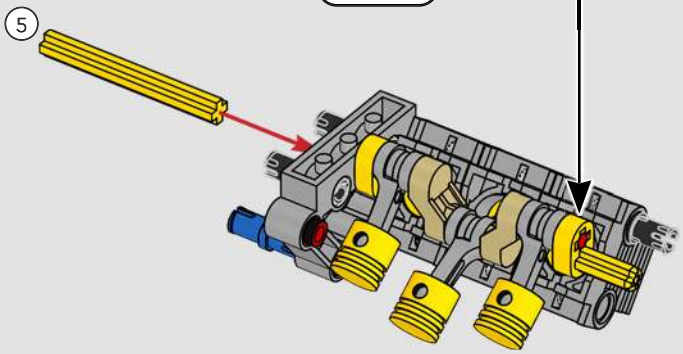

1:1

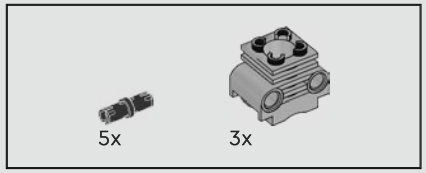

45

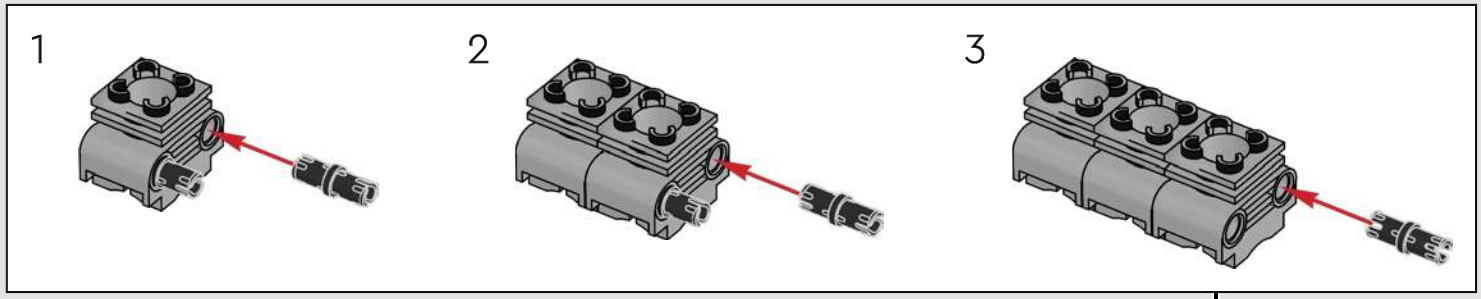

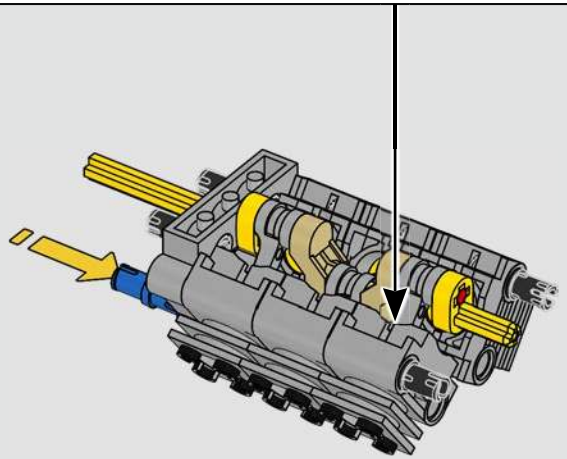

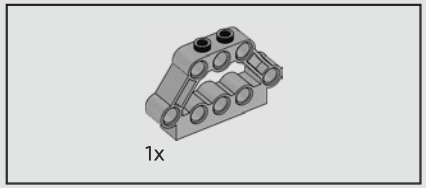

46

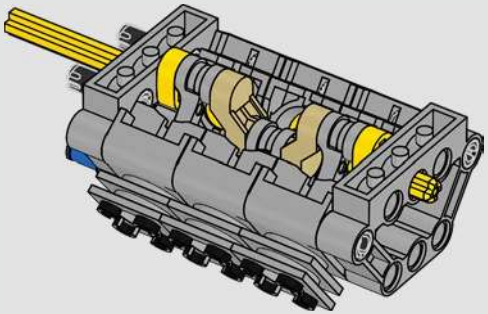

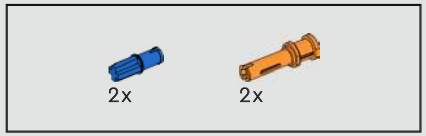

47

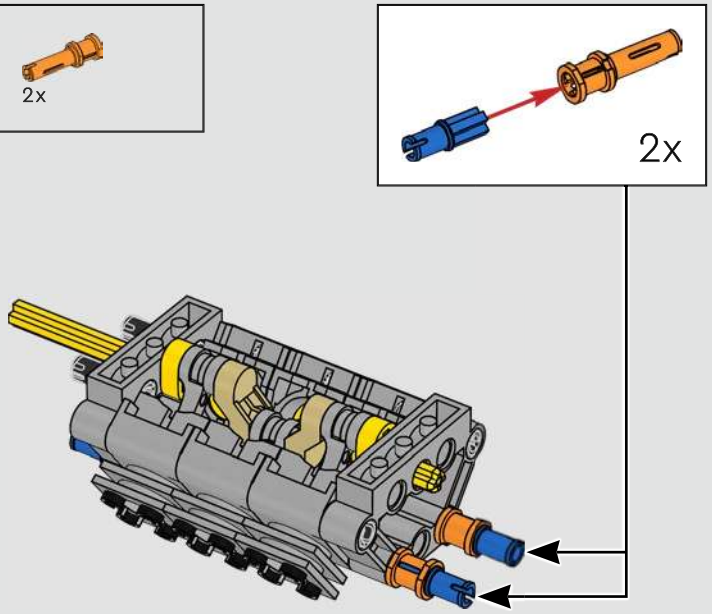

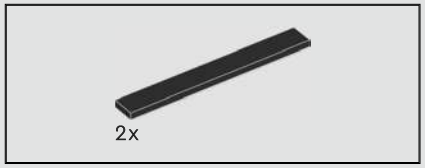

48

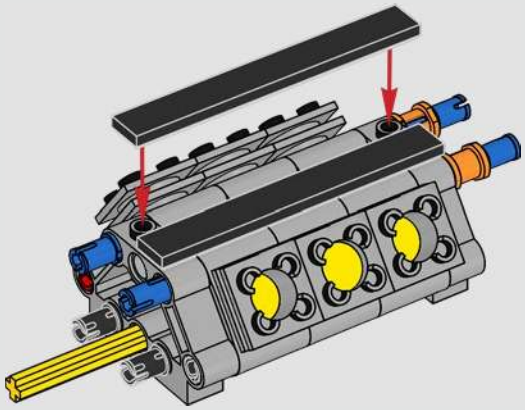

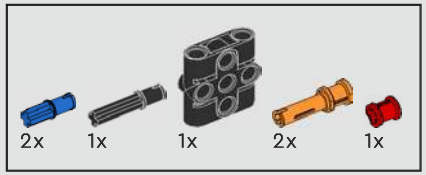

49

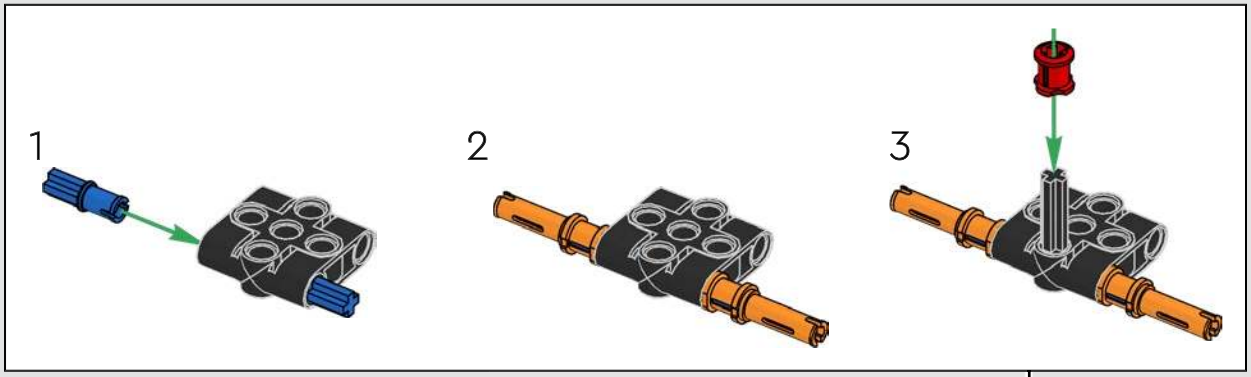

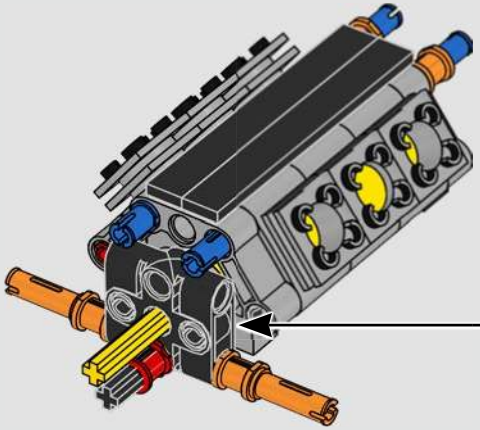

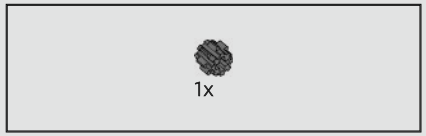

50

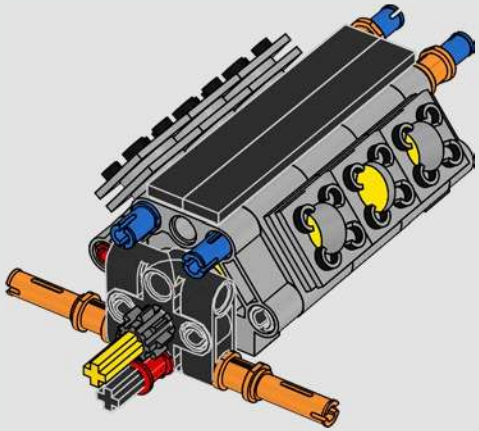

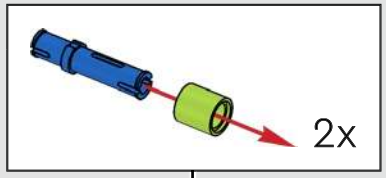

51

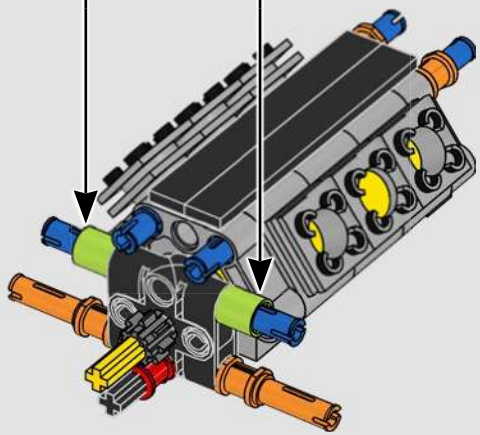

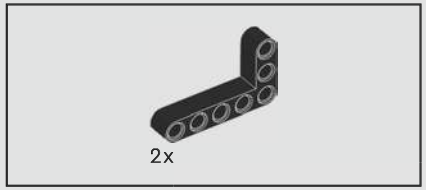

52

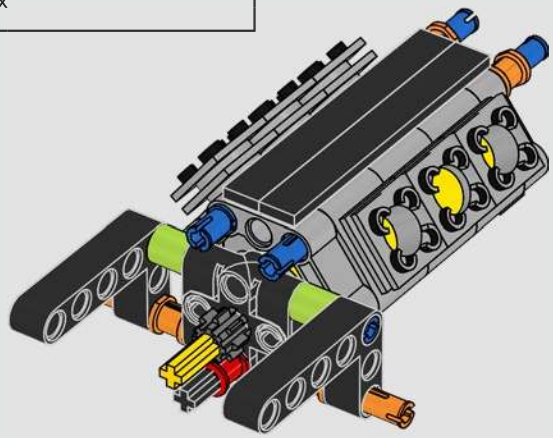

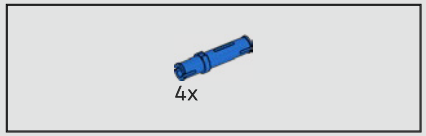

53

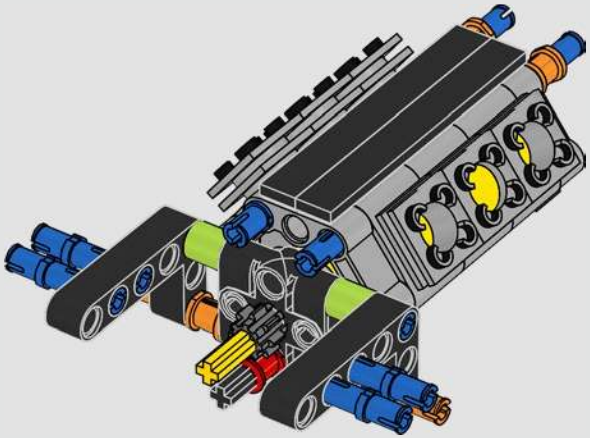

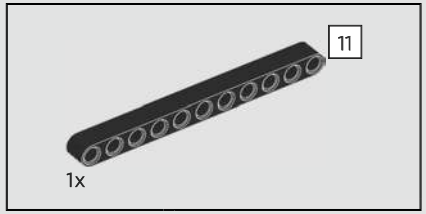

54

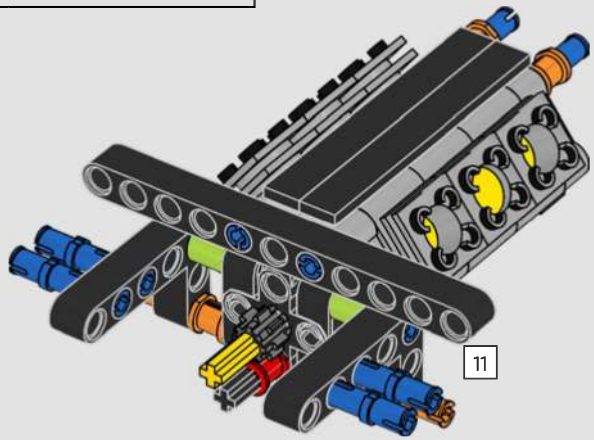

55

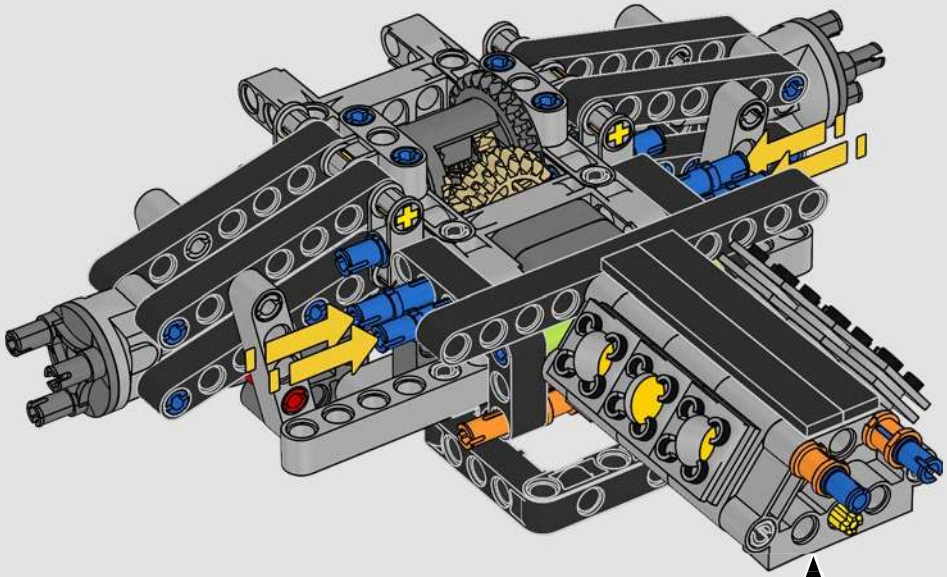

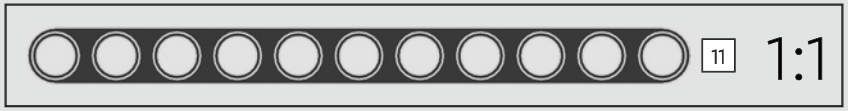

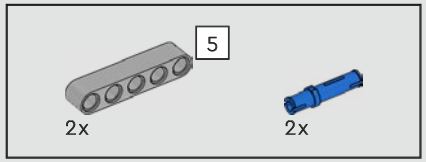

56

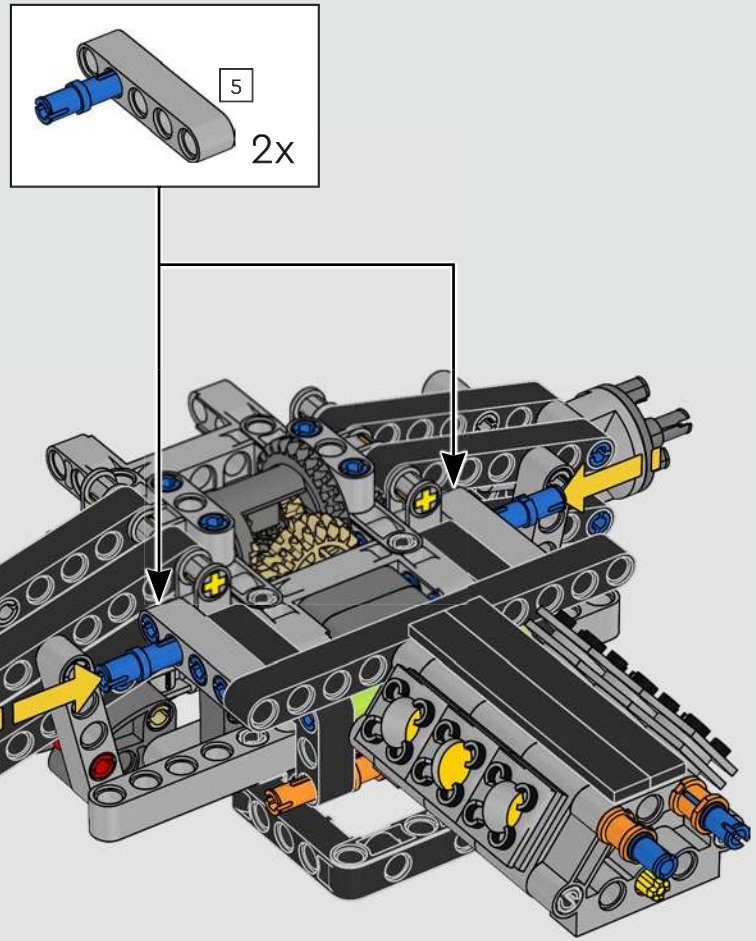

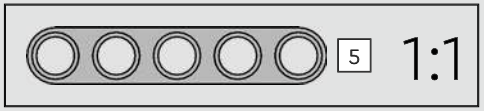

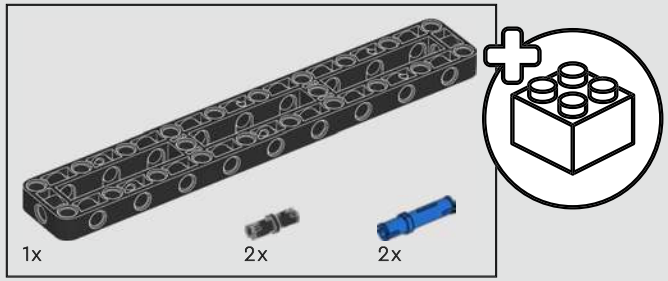

57

1

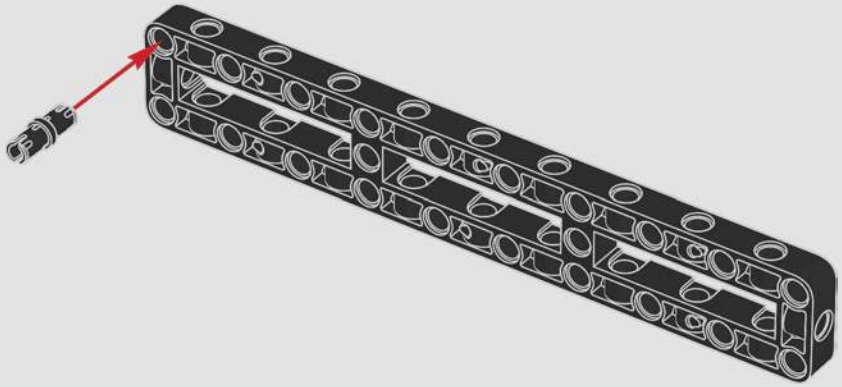

2

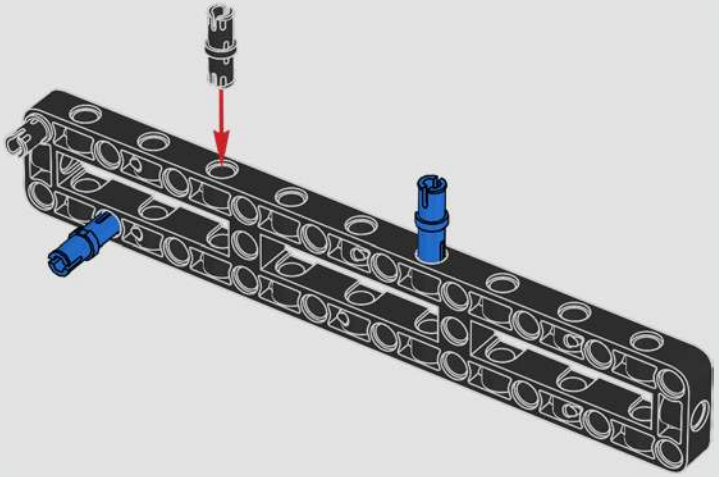

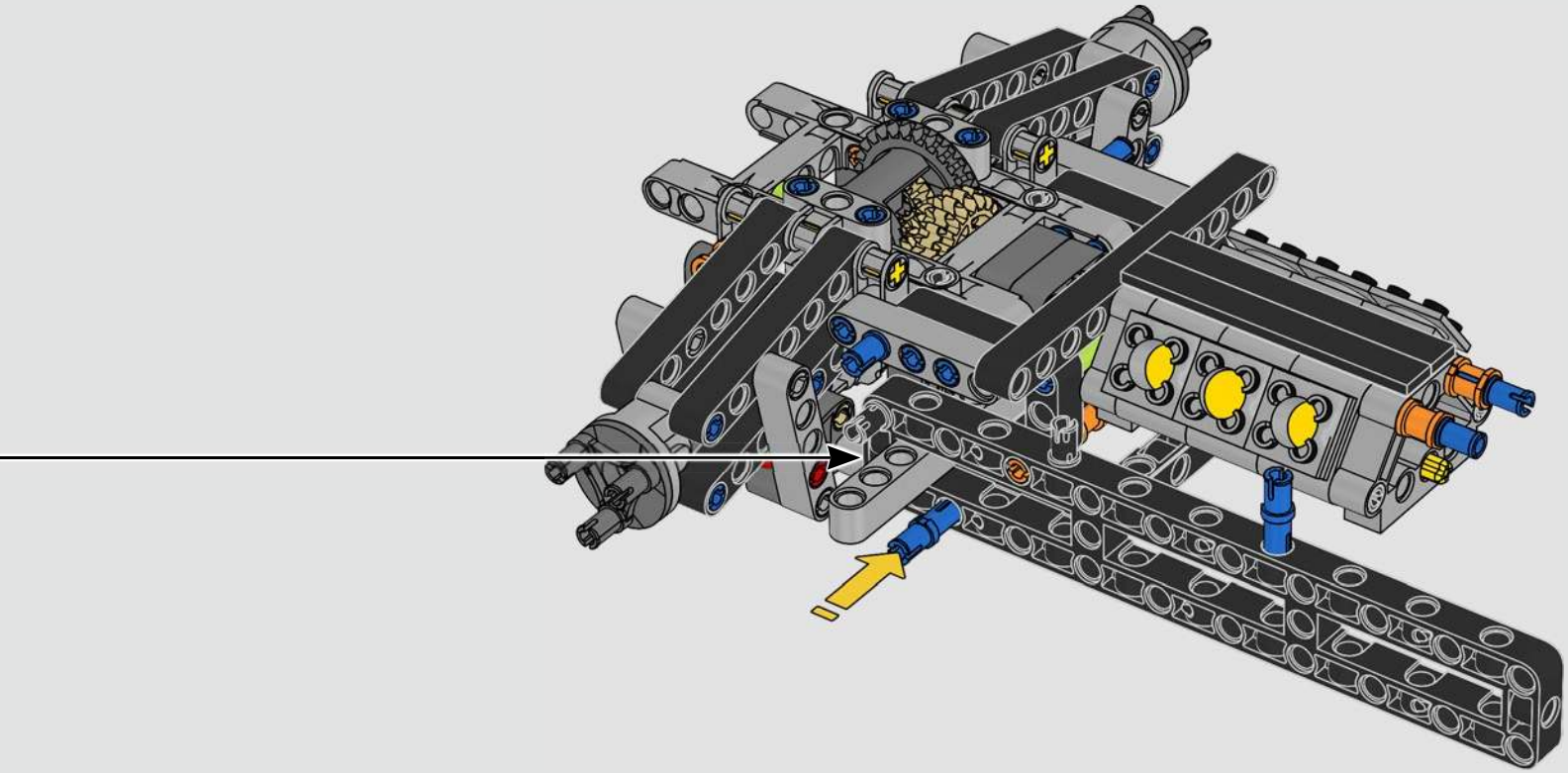

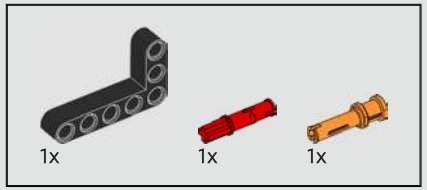

58

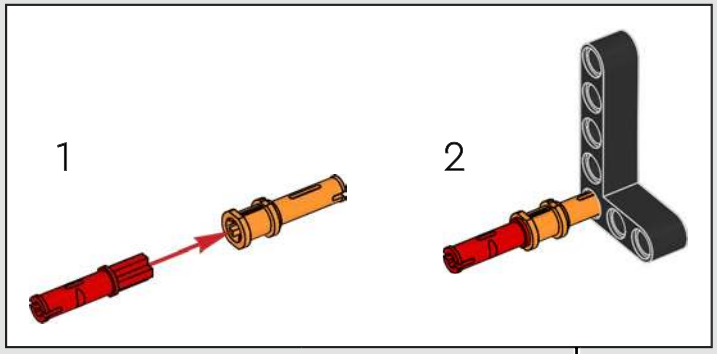

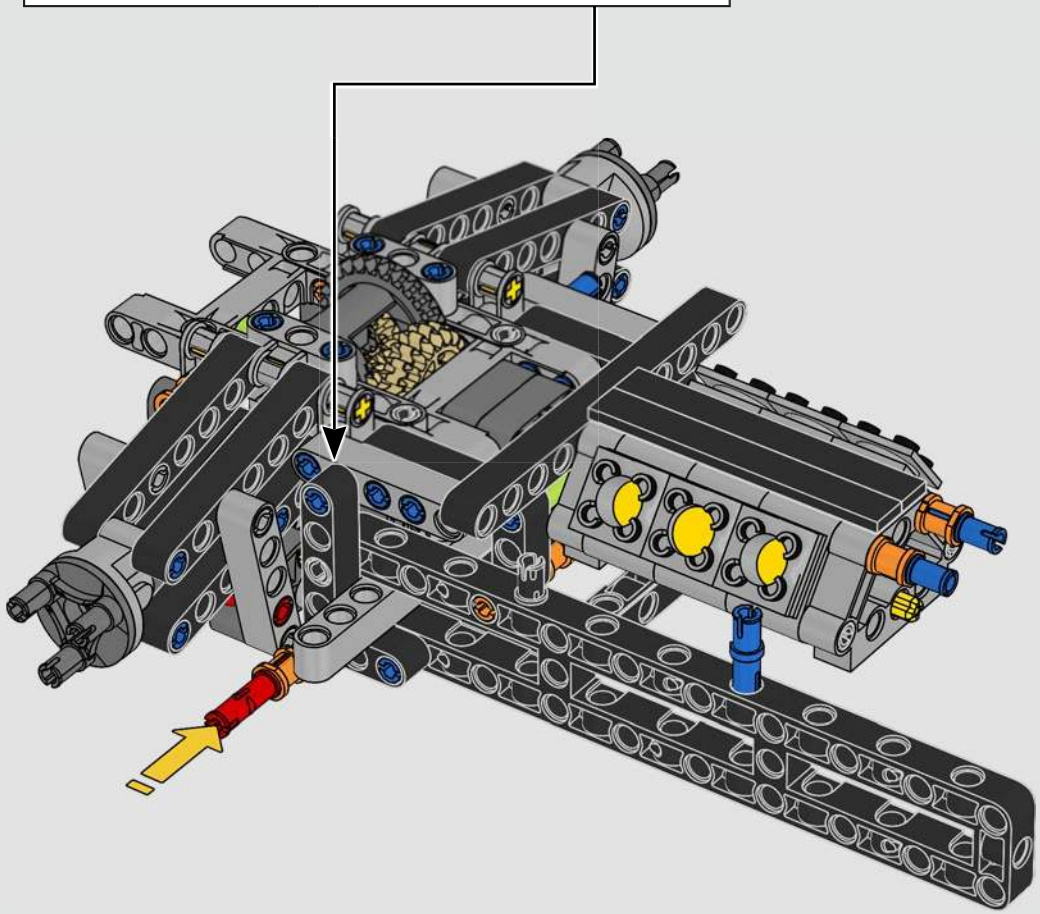

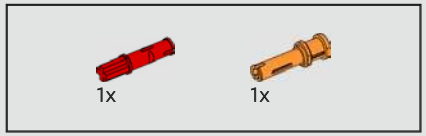

59

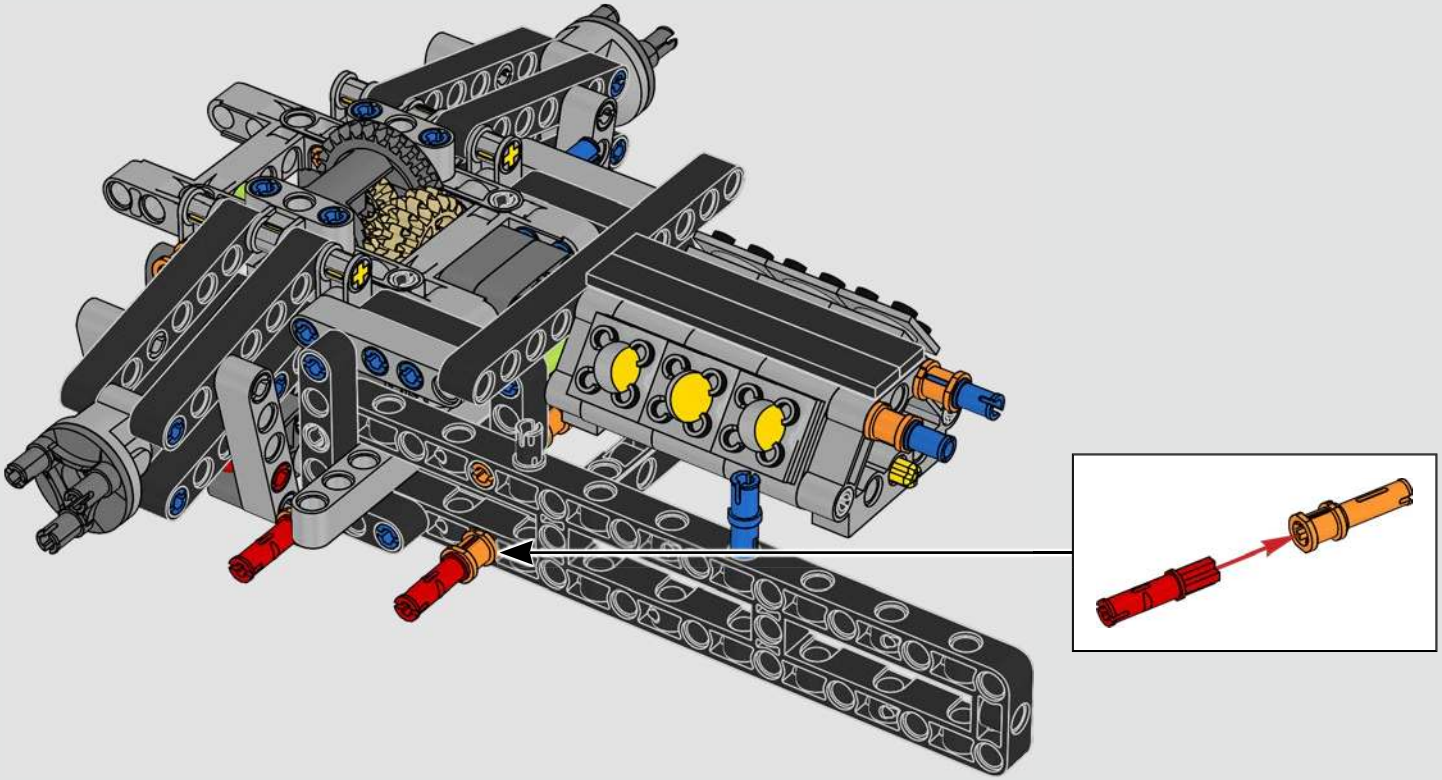

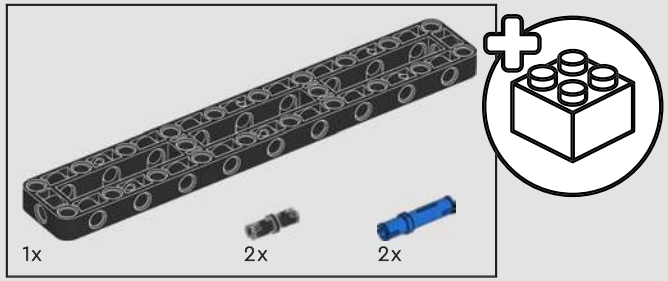

60

1

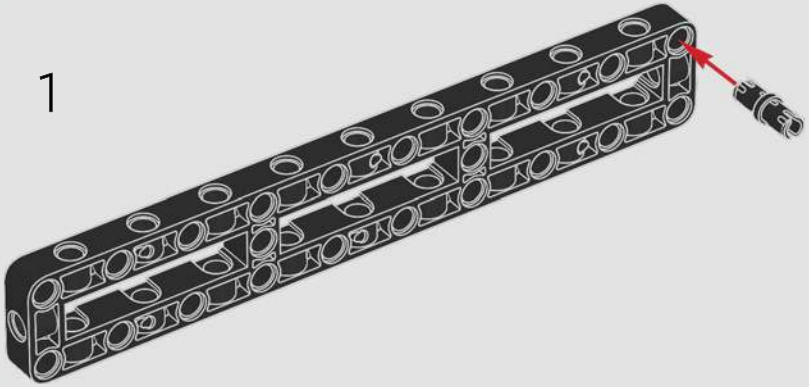

2

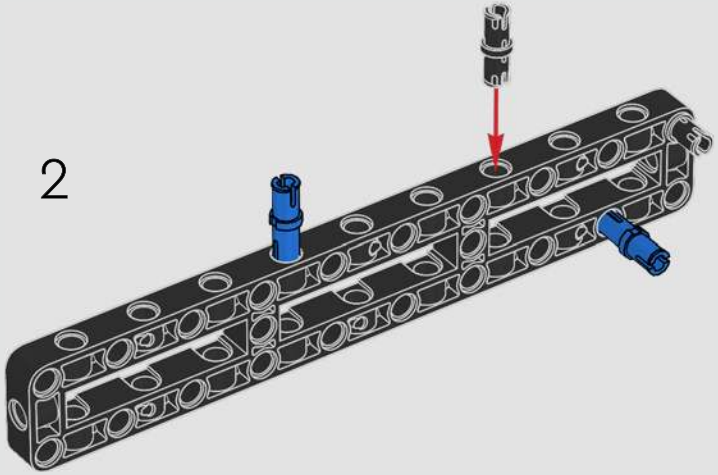

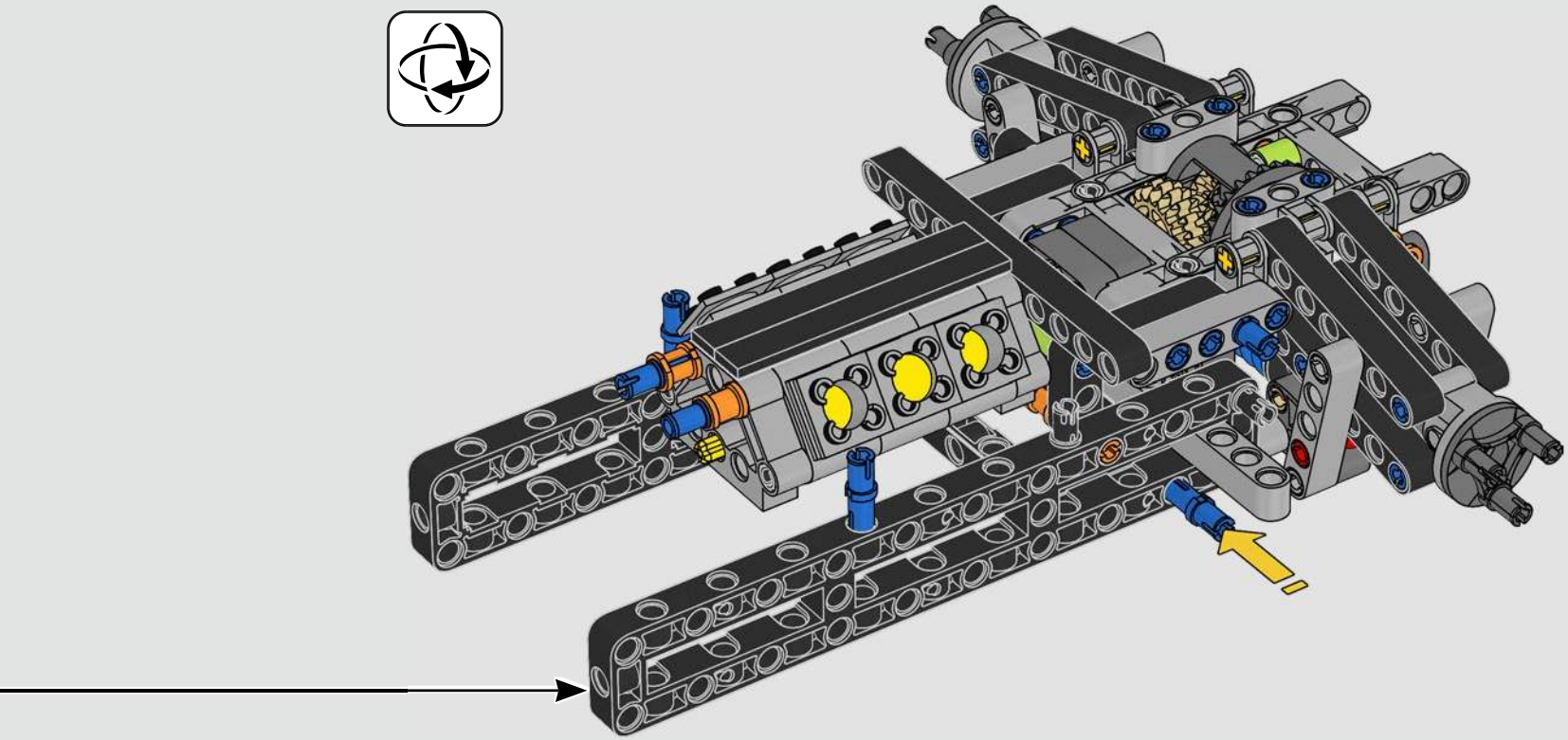

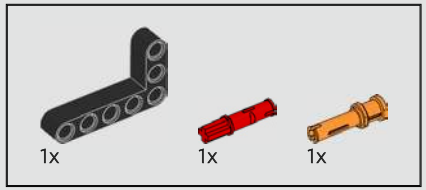

61

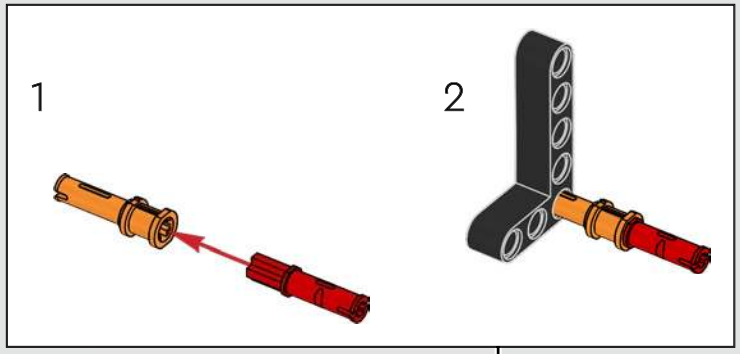

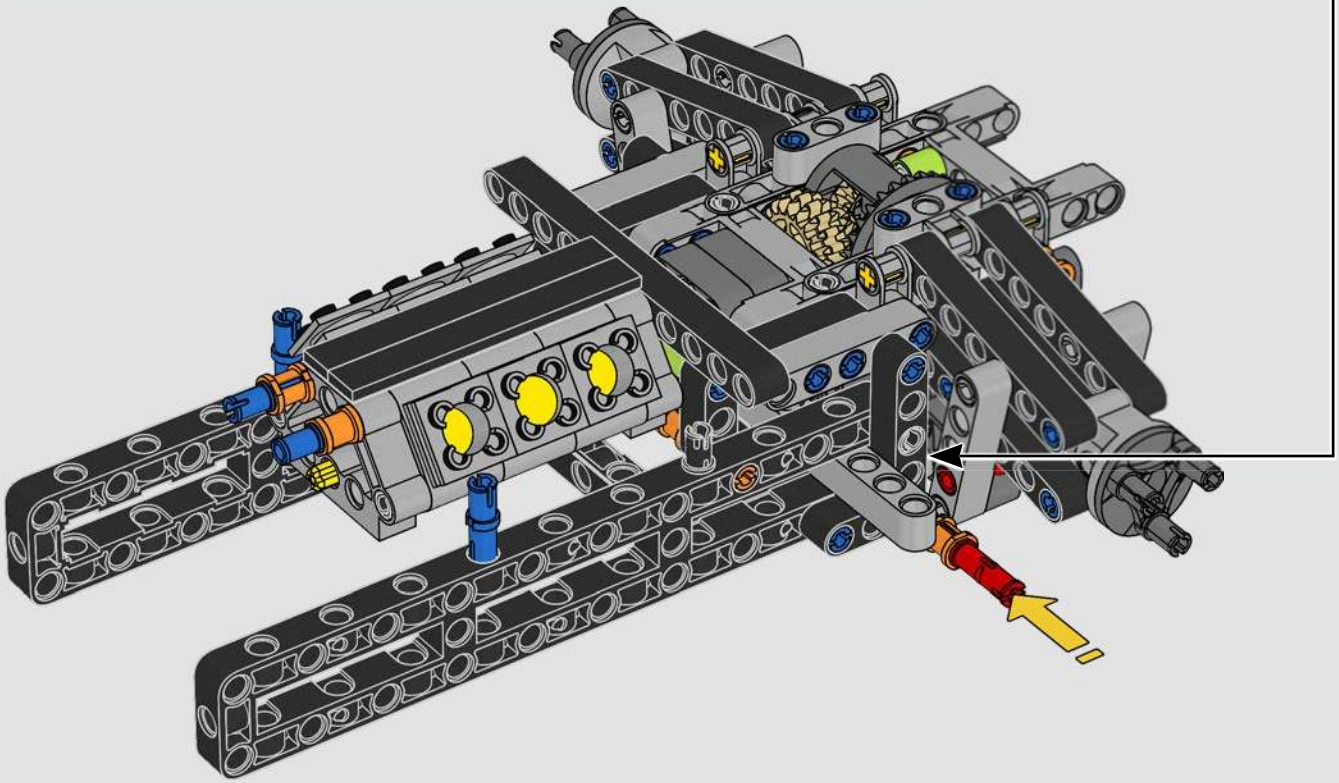

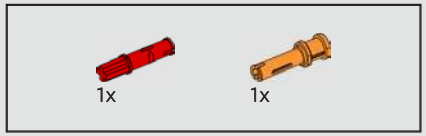

62

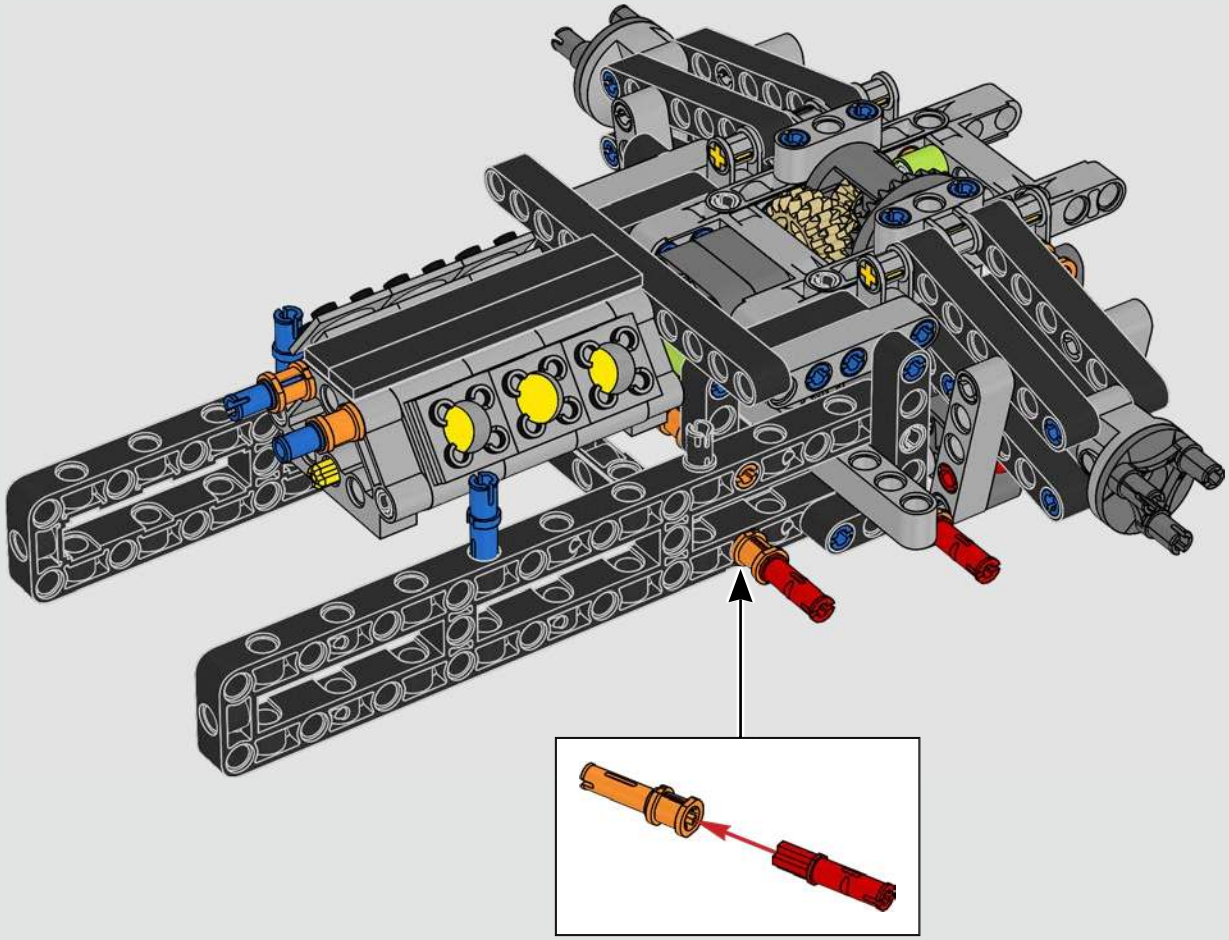

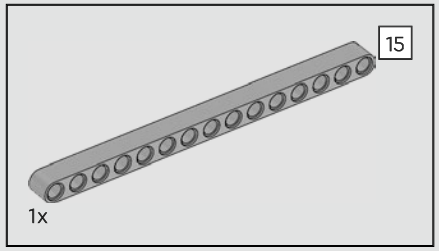

63

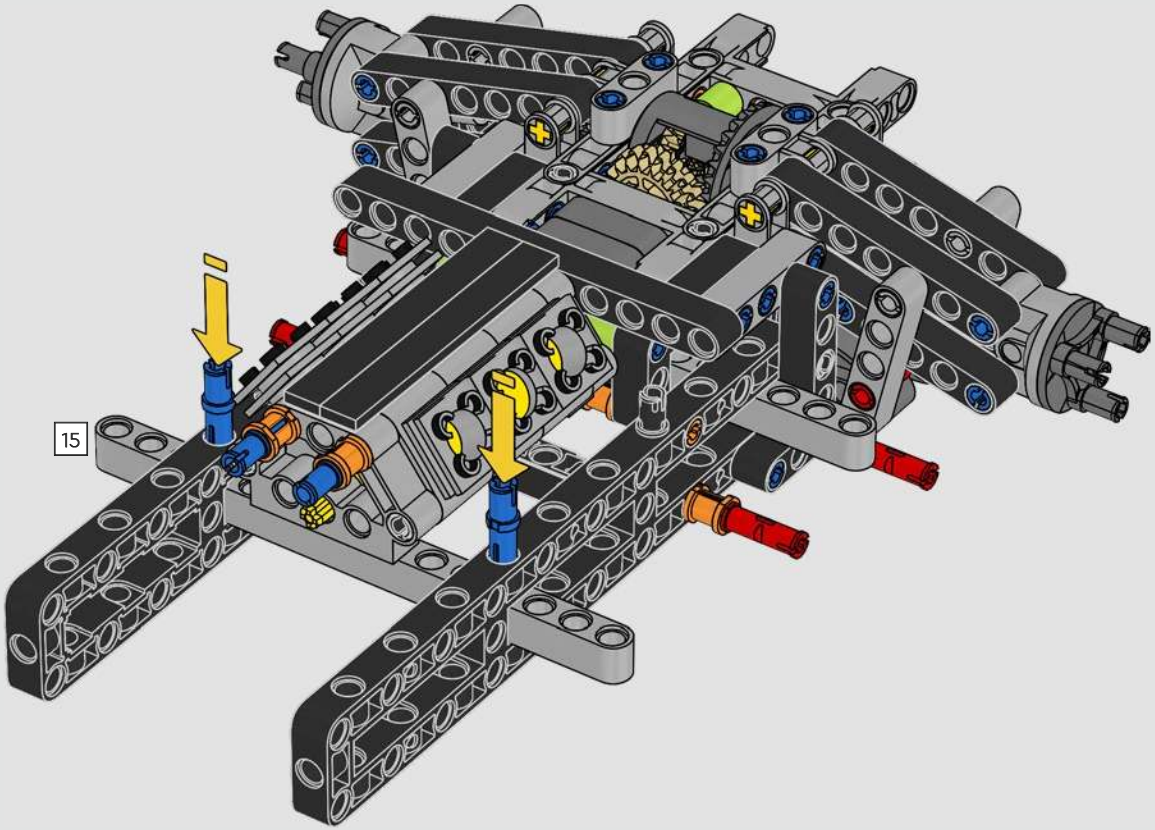

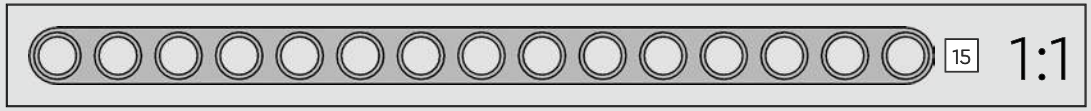

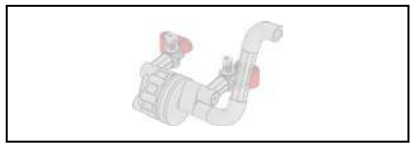

64

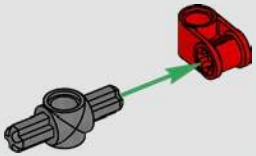

65

66

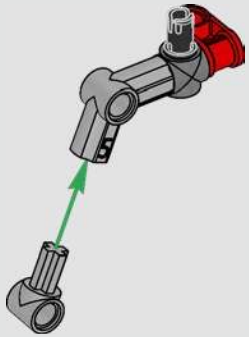

67

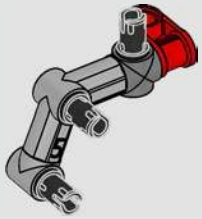

68

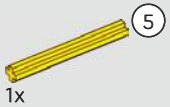

69

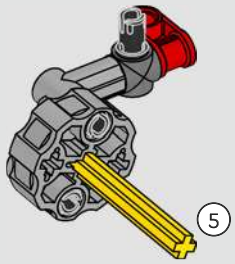

1:1

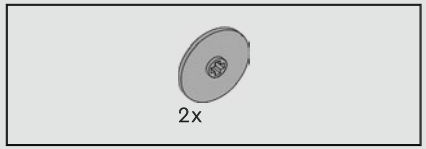

70

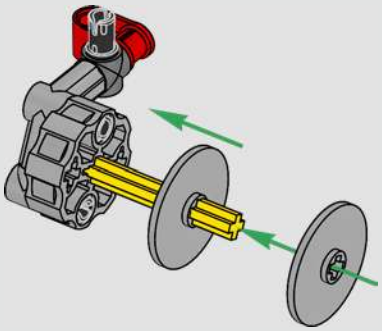

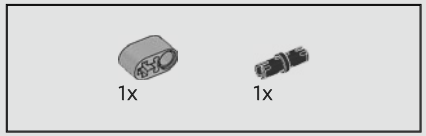

71

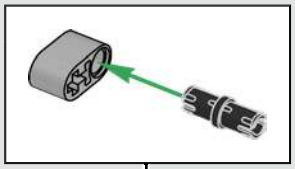

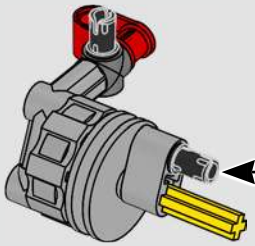

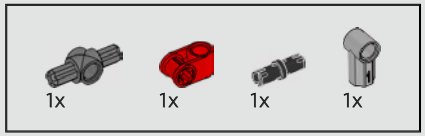

72

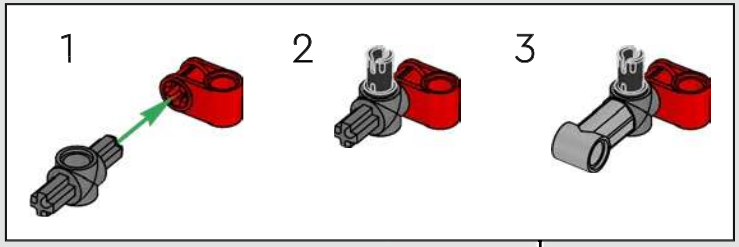

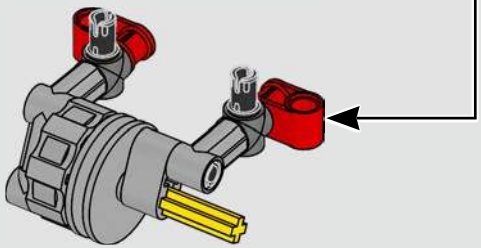

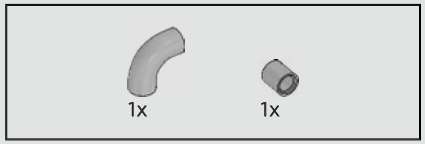

73

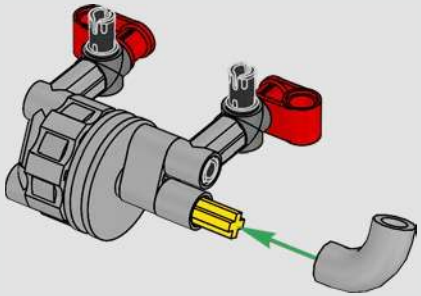

74

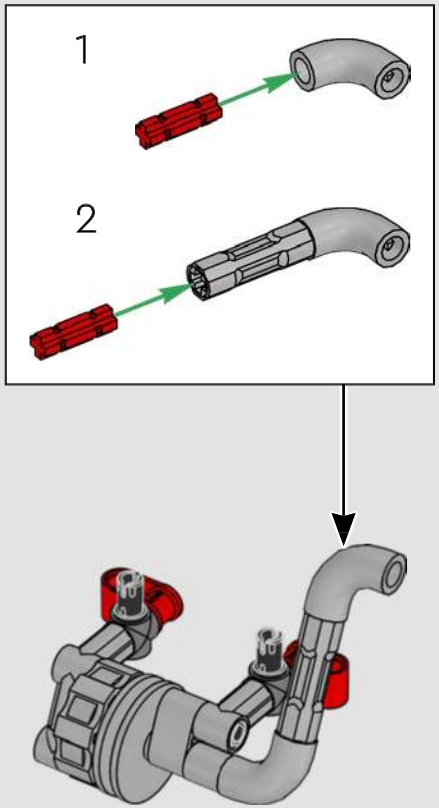

75

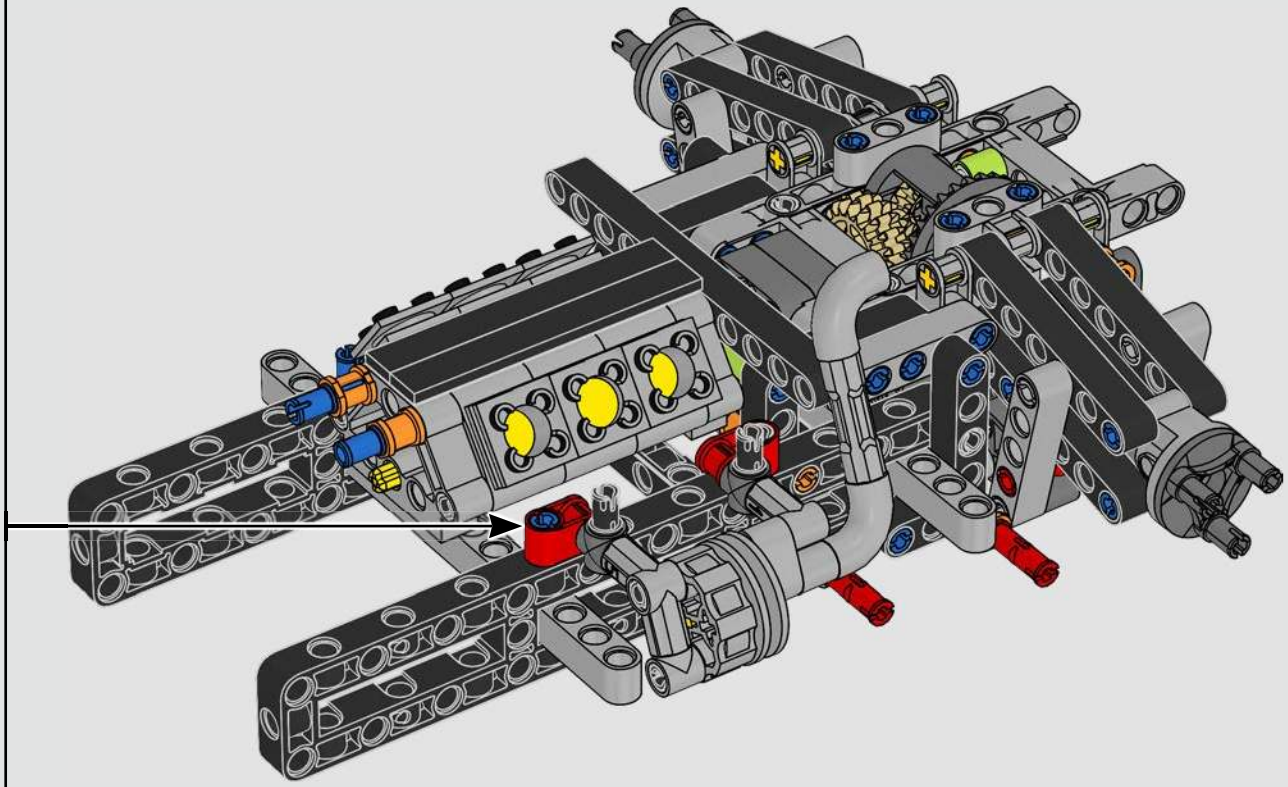

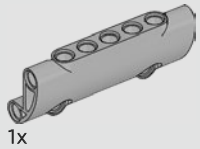

76

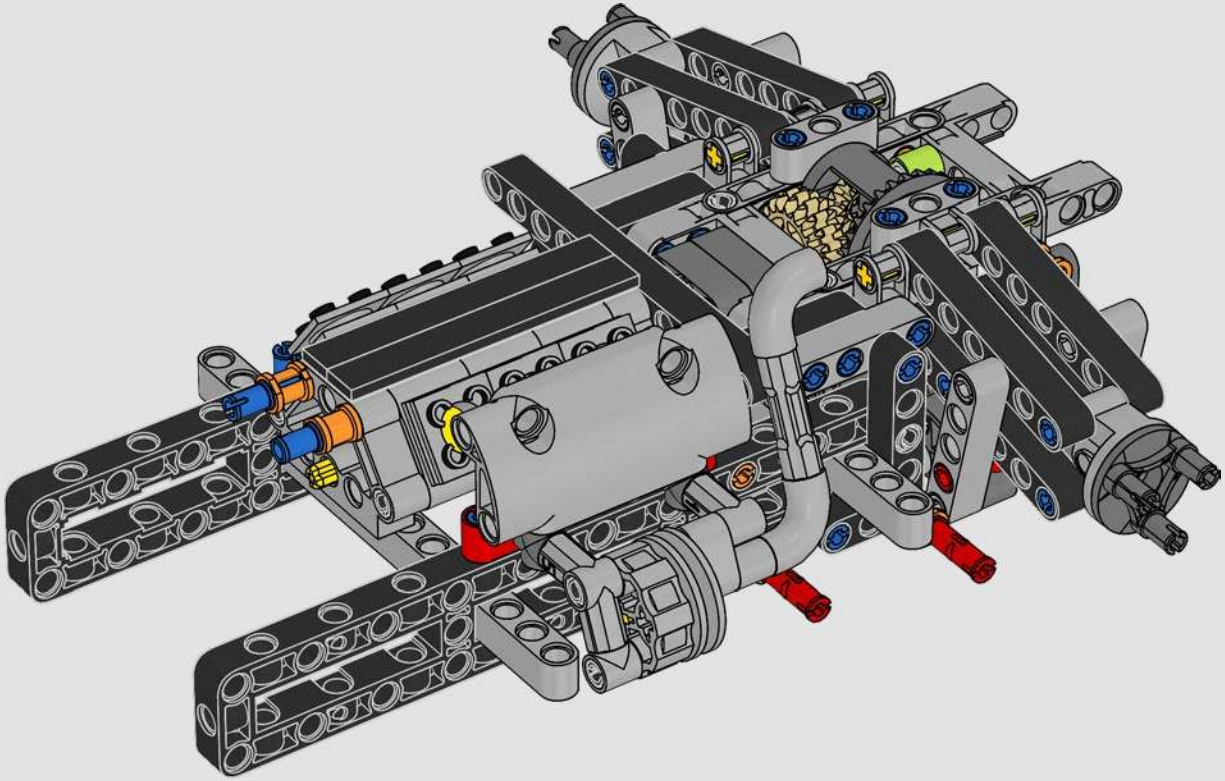

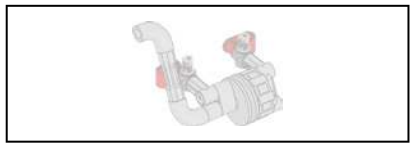

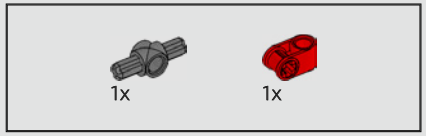

77

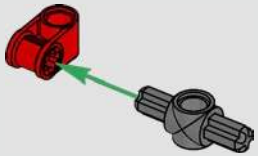

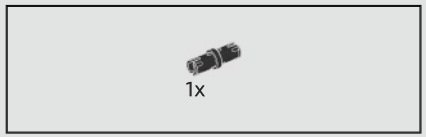

78

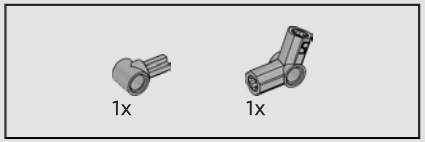

79

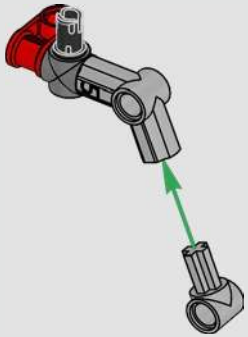

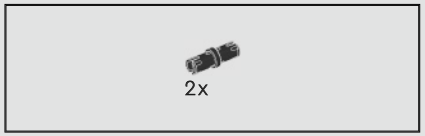

80

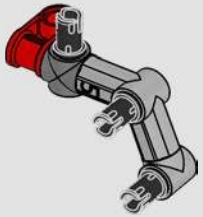

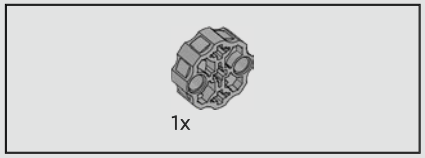

81

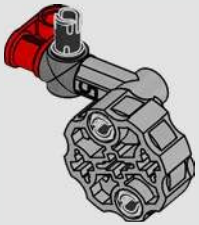

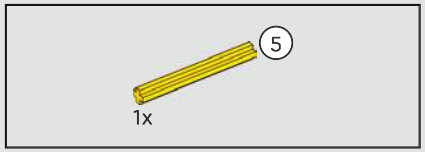

82

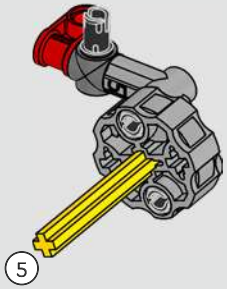

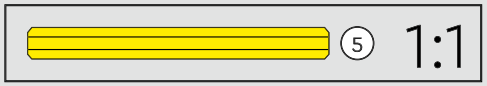

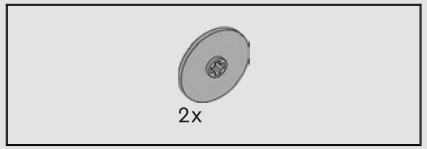

83

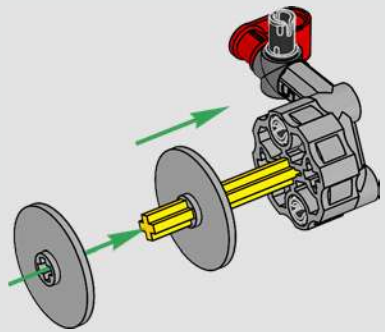

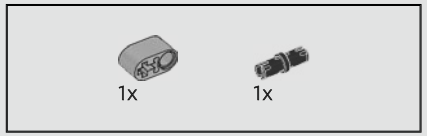

84

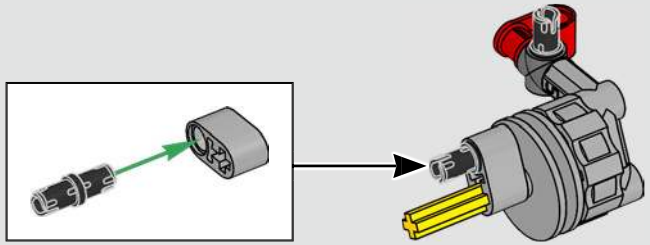

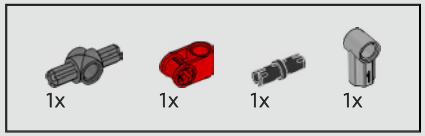

85

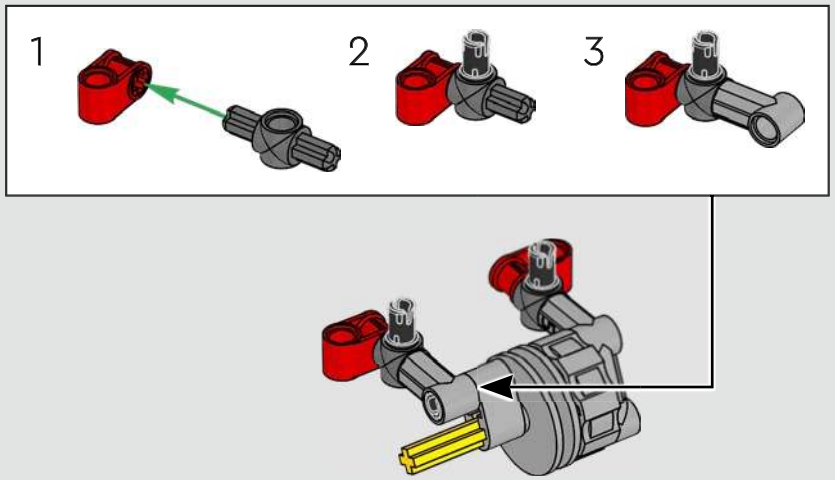

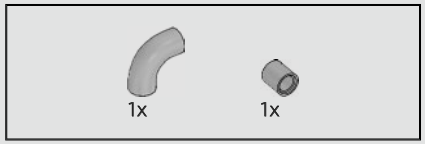

86

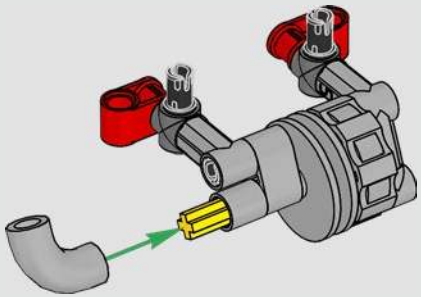

87

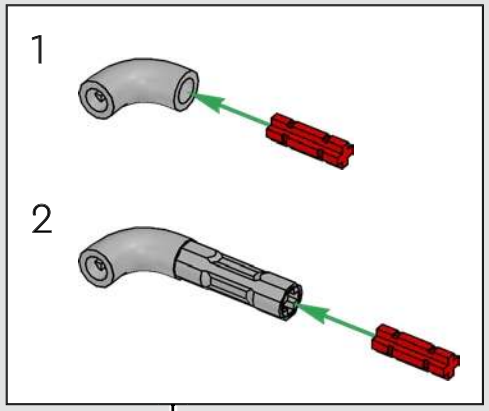

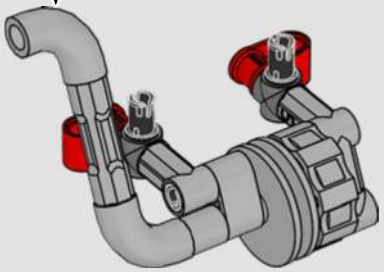

88

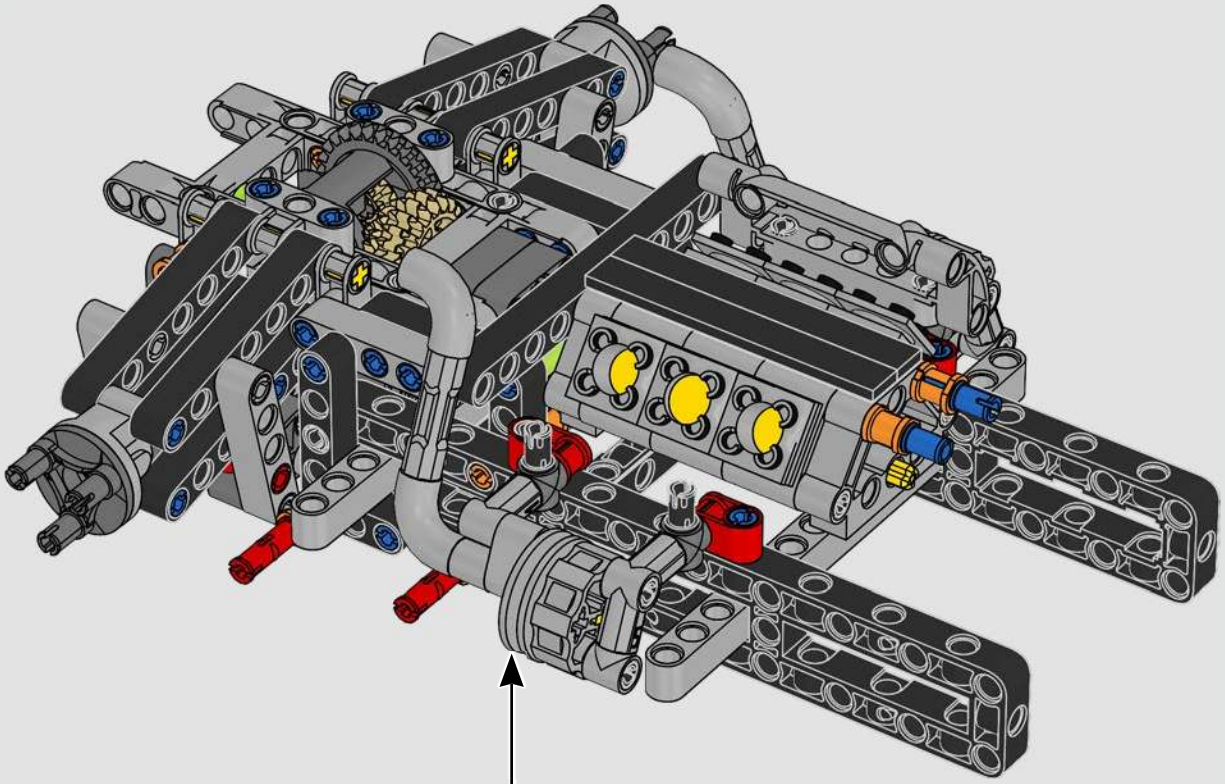

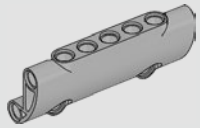

89

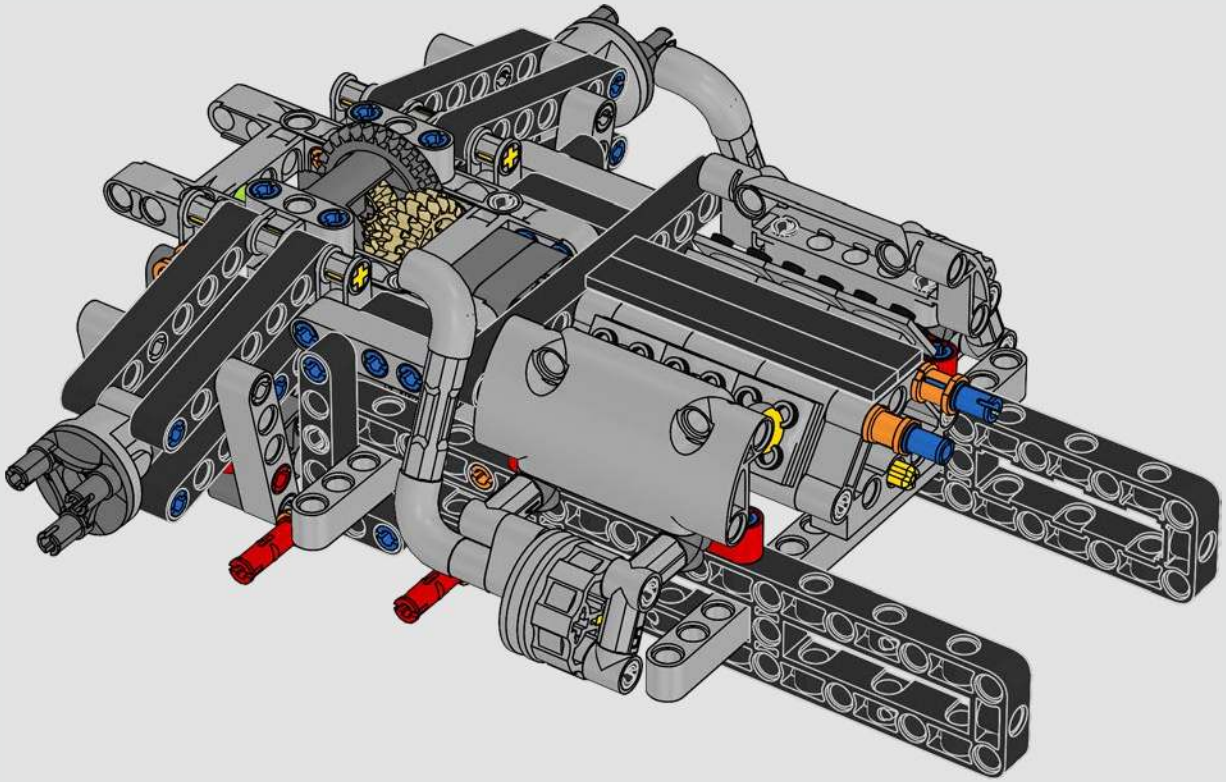

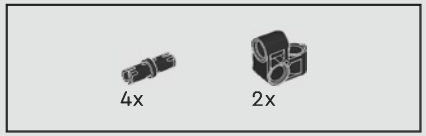

90

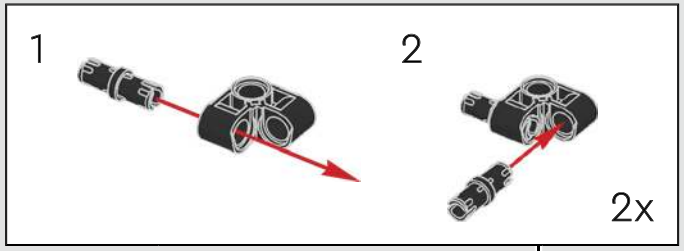

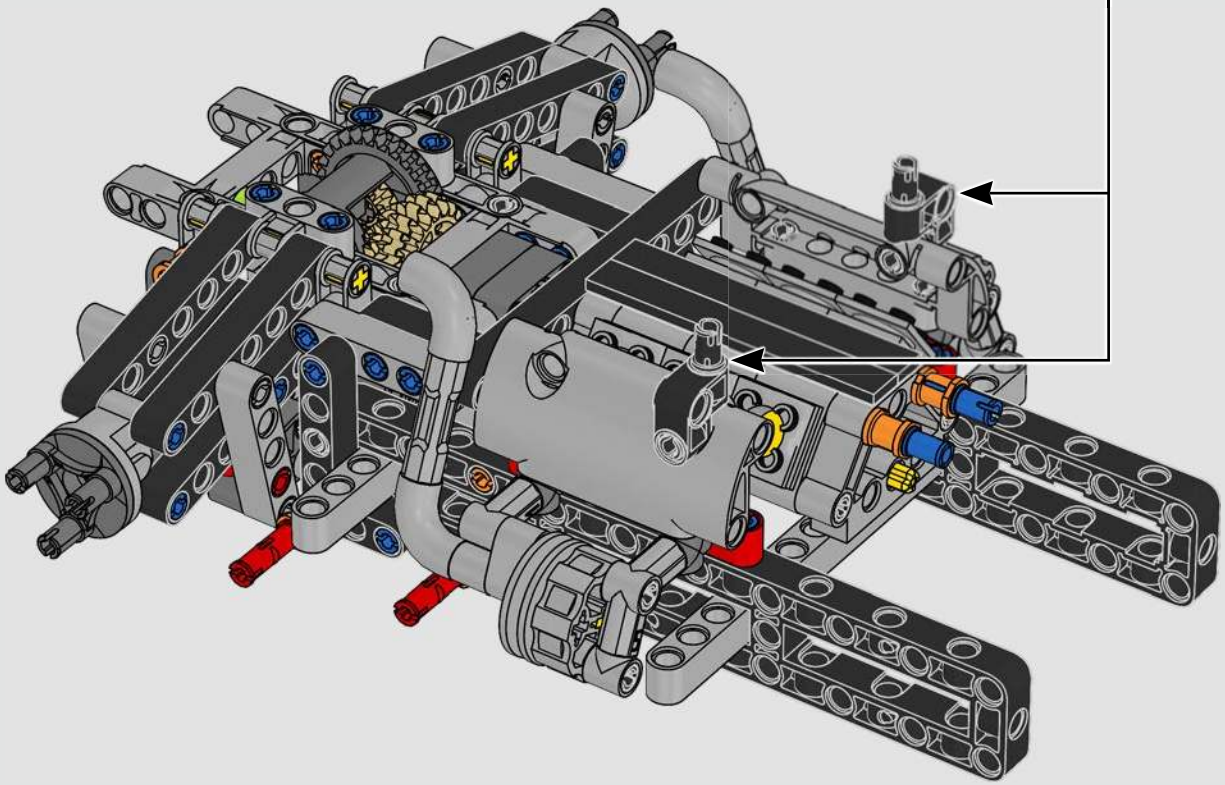

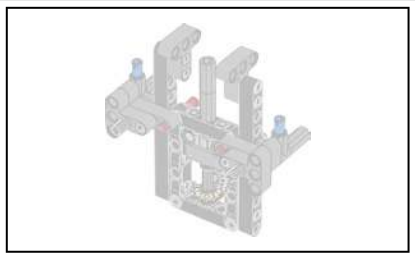

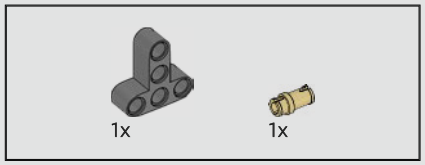

91

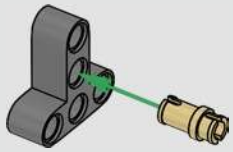

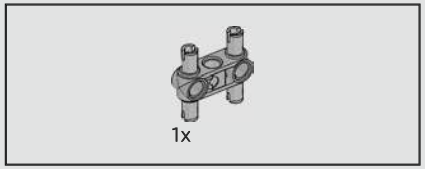

92

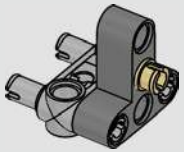

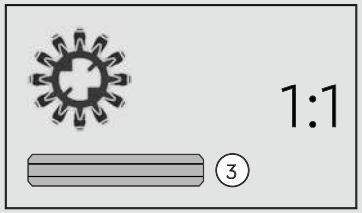

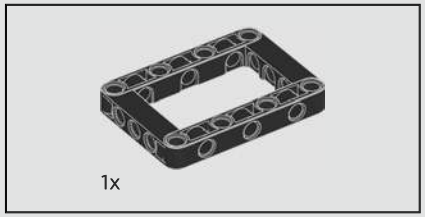

93

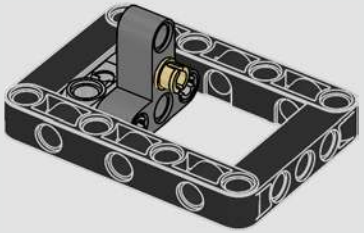

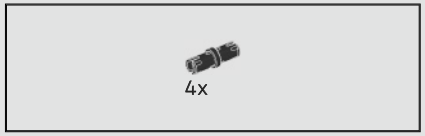

94

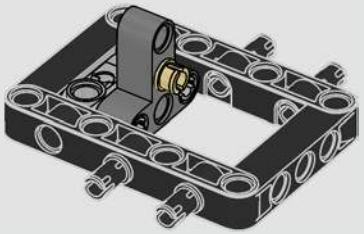

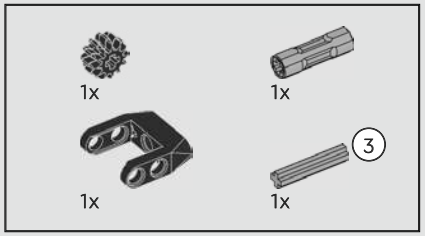

95

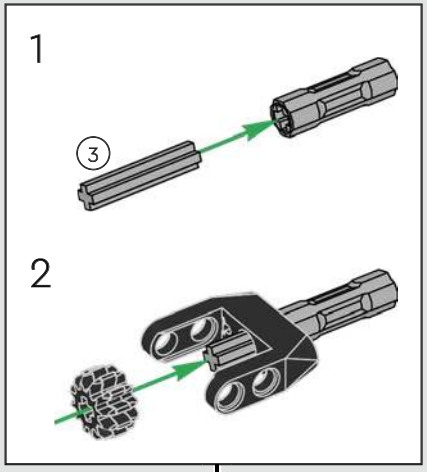

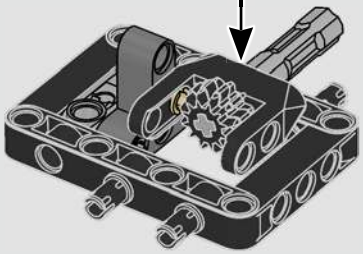

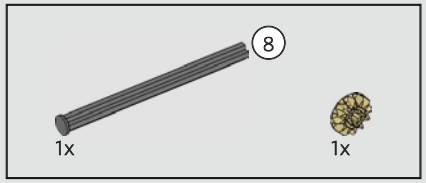

96

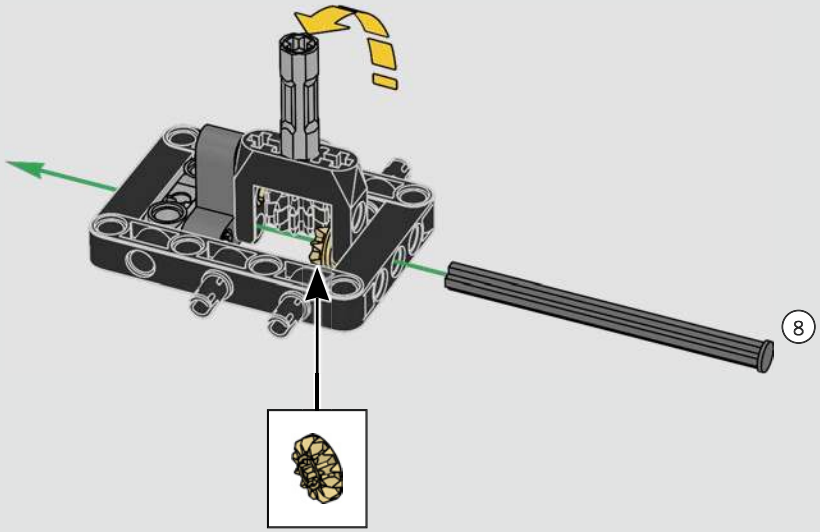

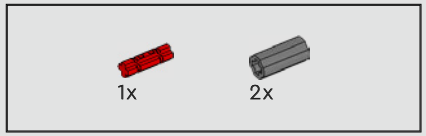

97

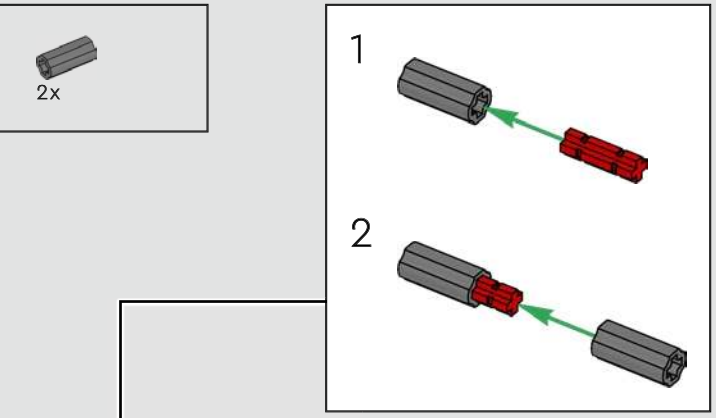

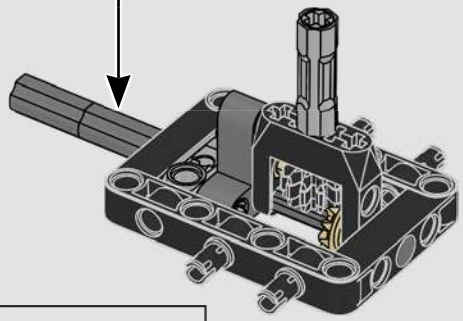

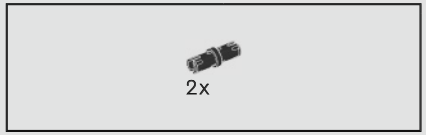

98

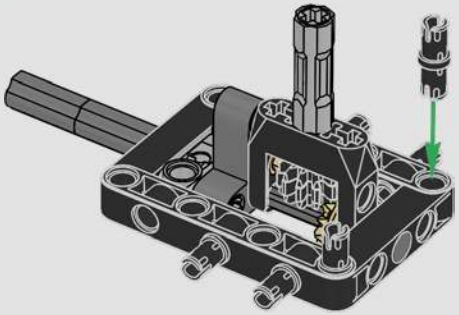

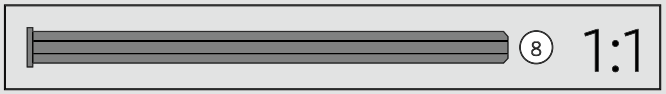

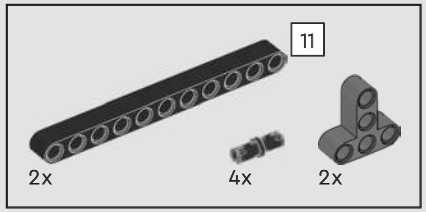

99

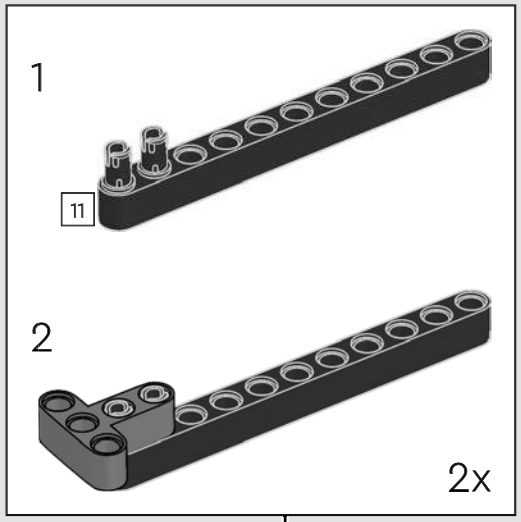

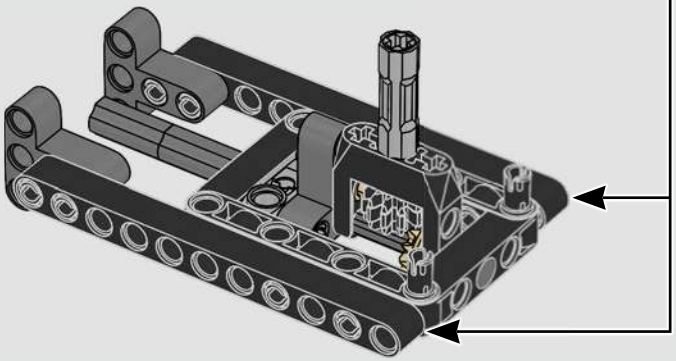

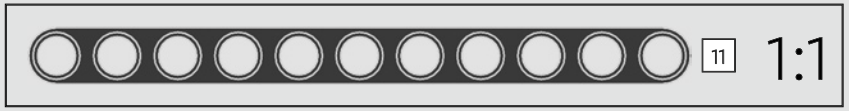

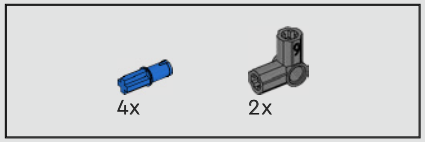

100

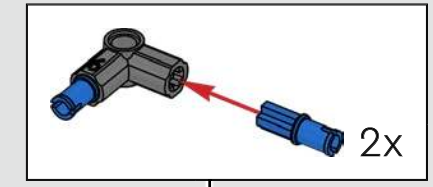

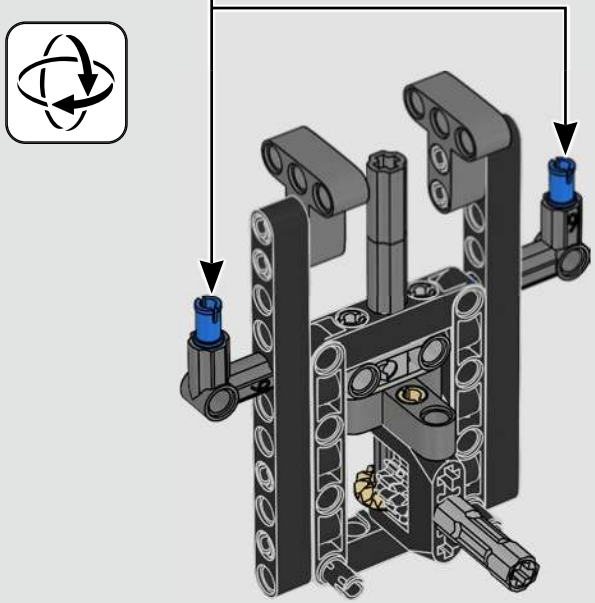

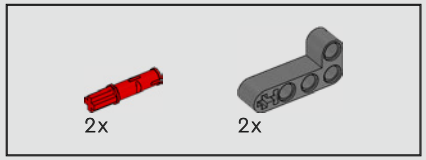

101

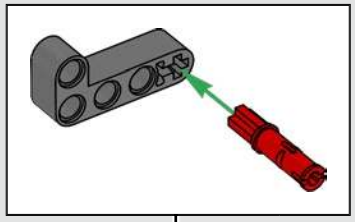

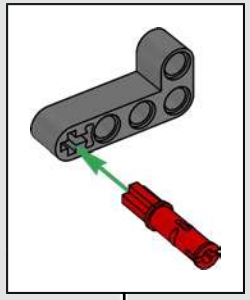

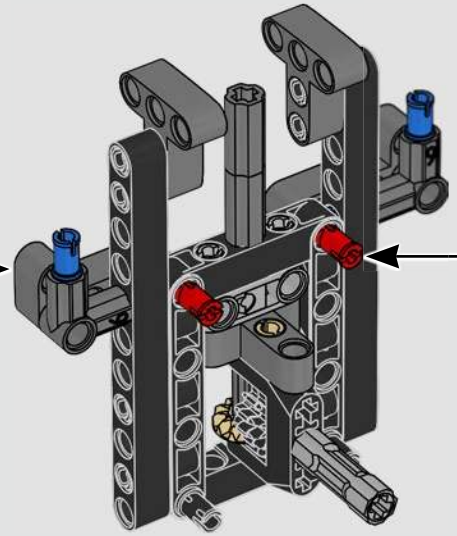

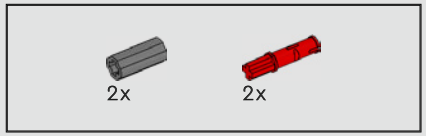

102

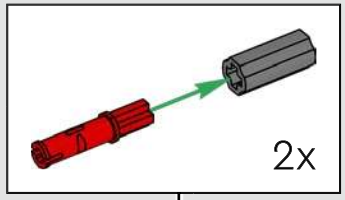

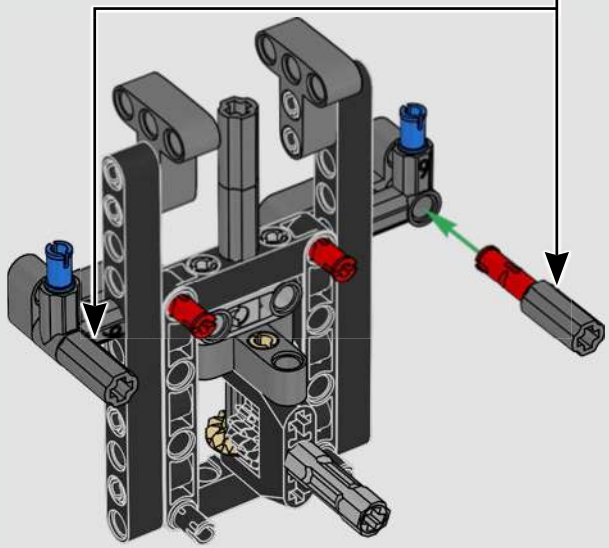

103

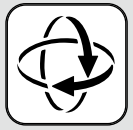

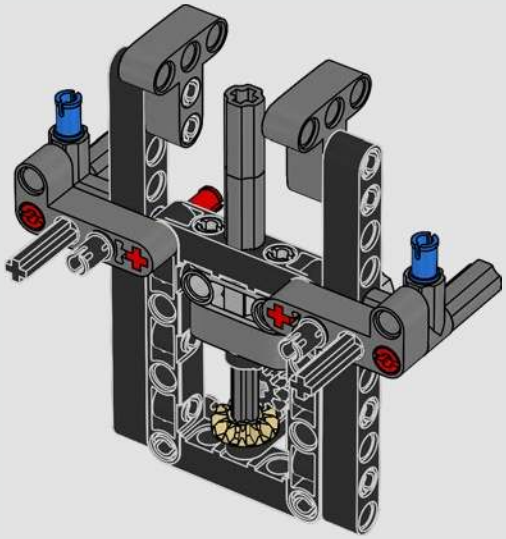

104

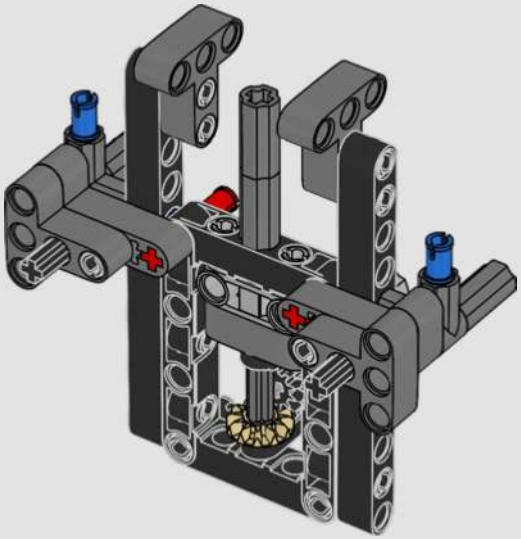

105

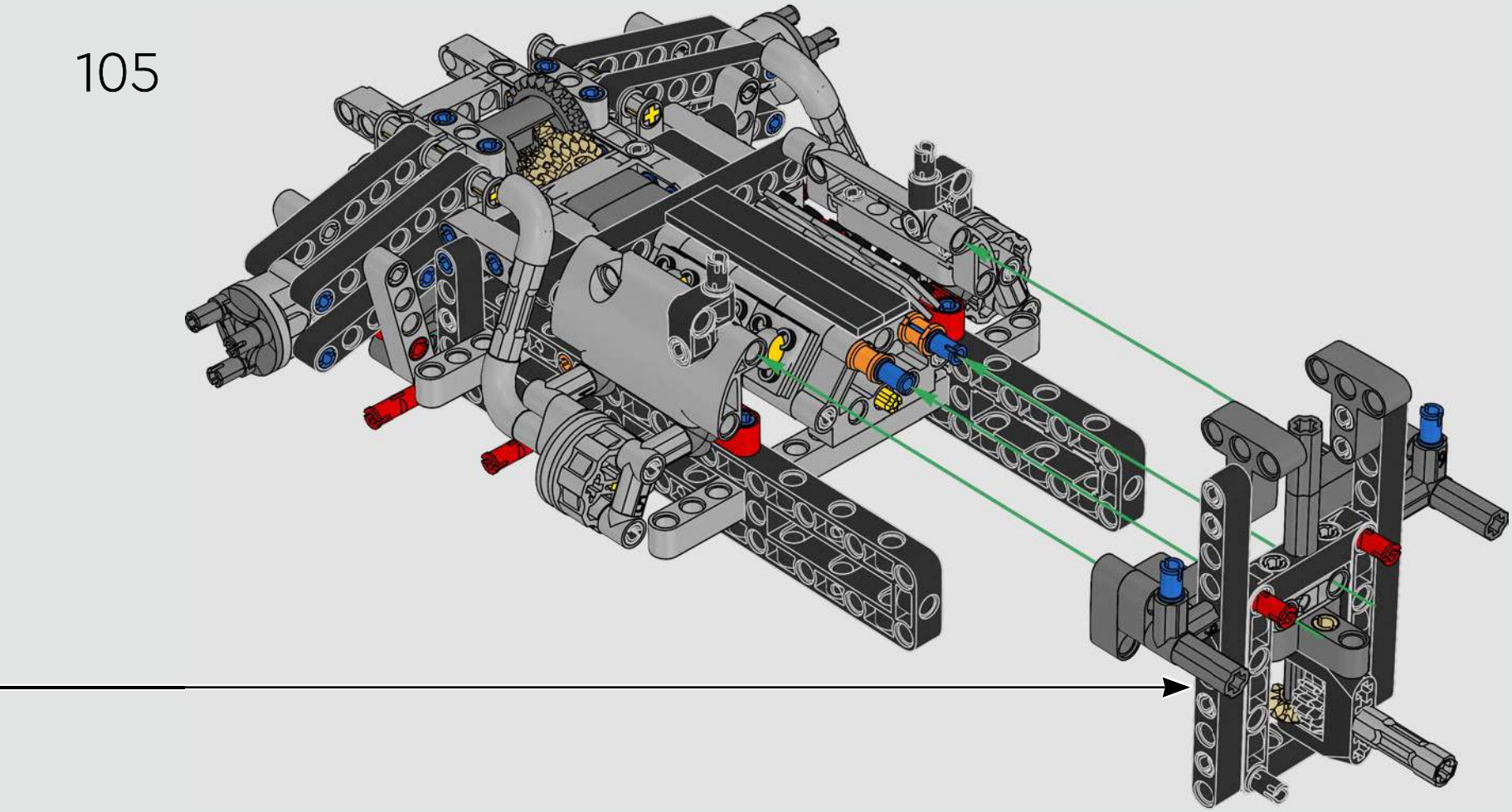

106

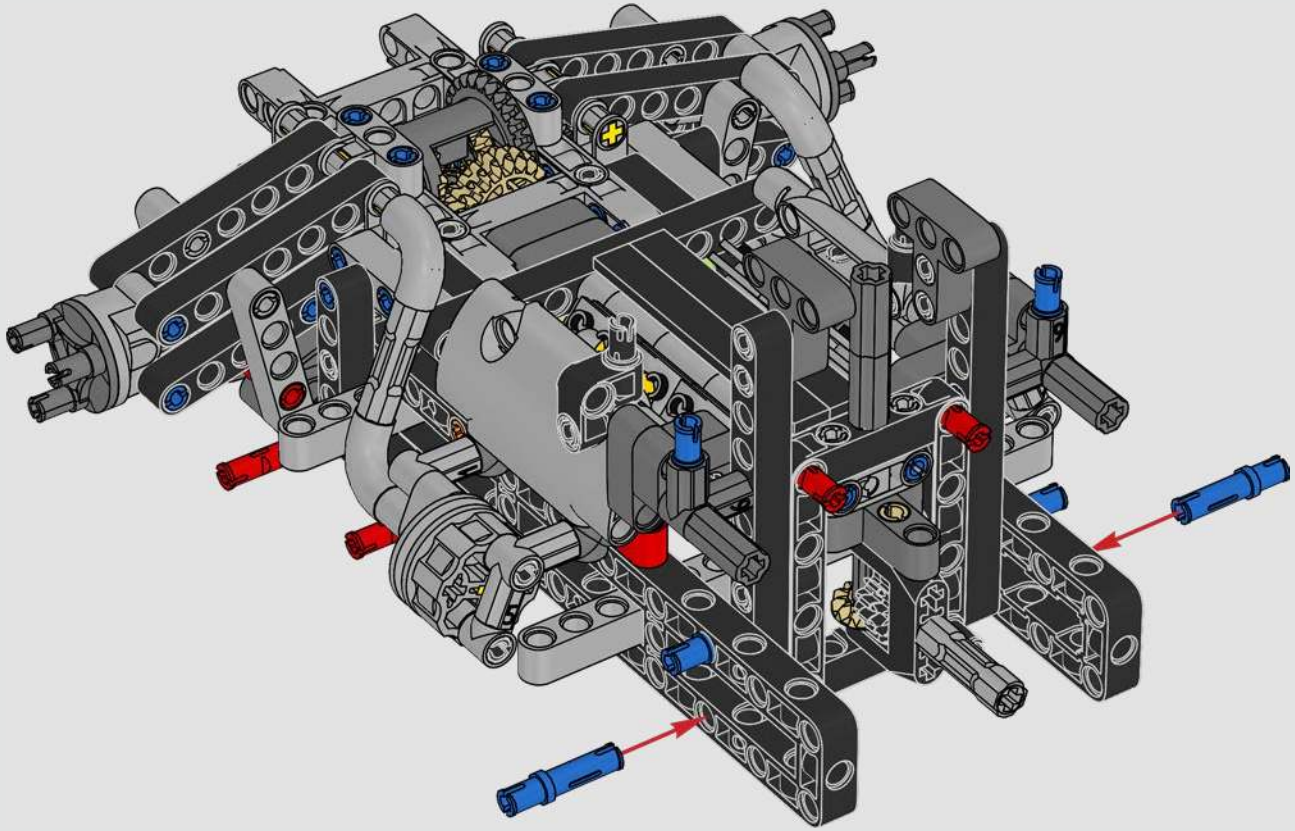

107

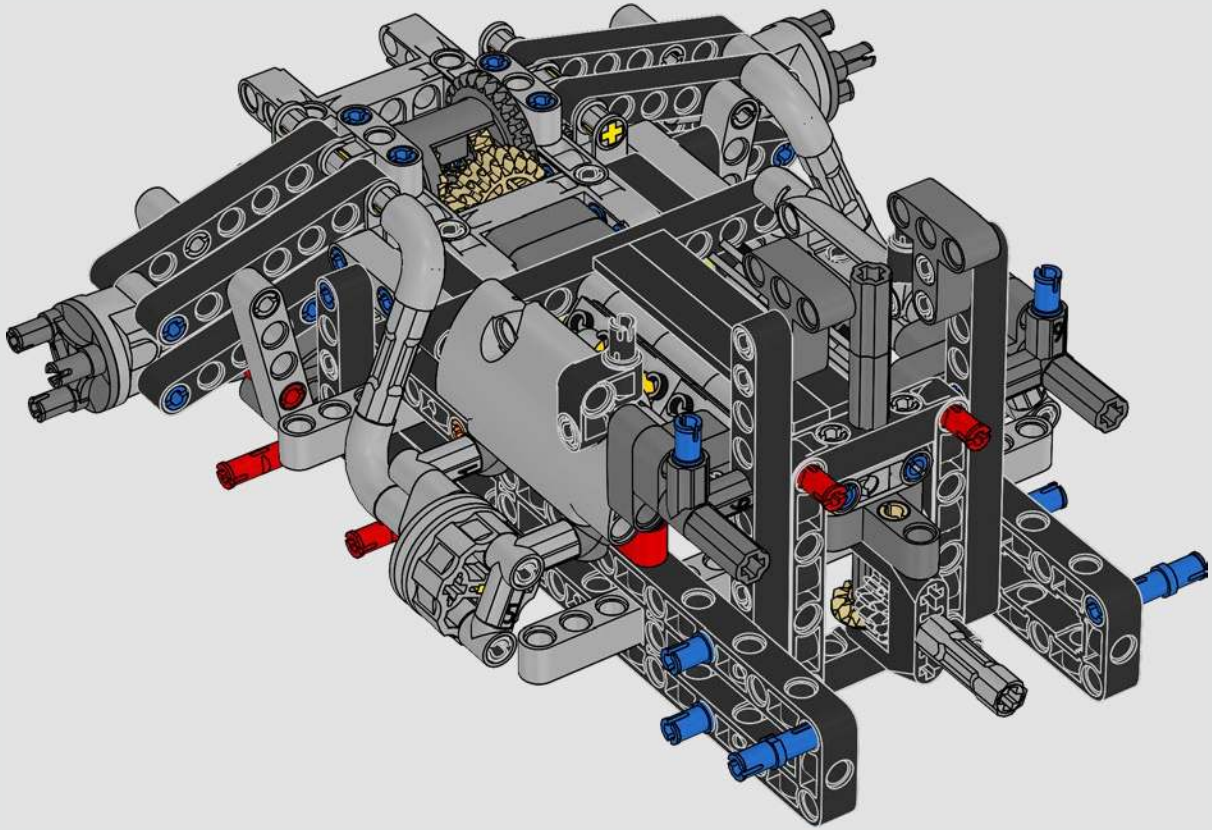

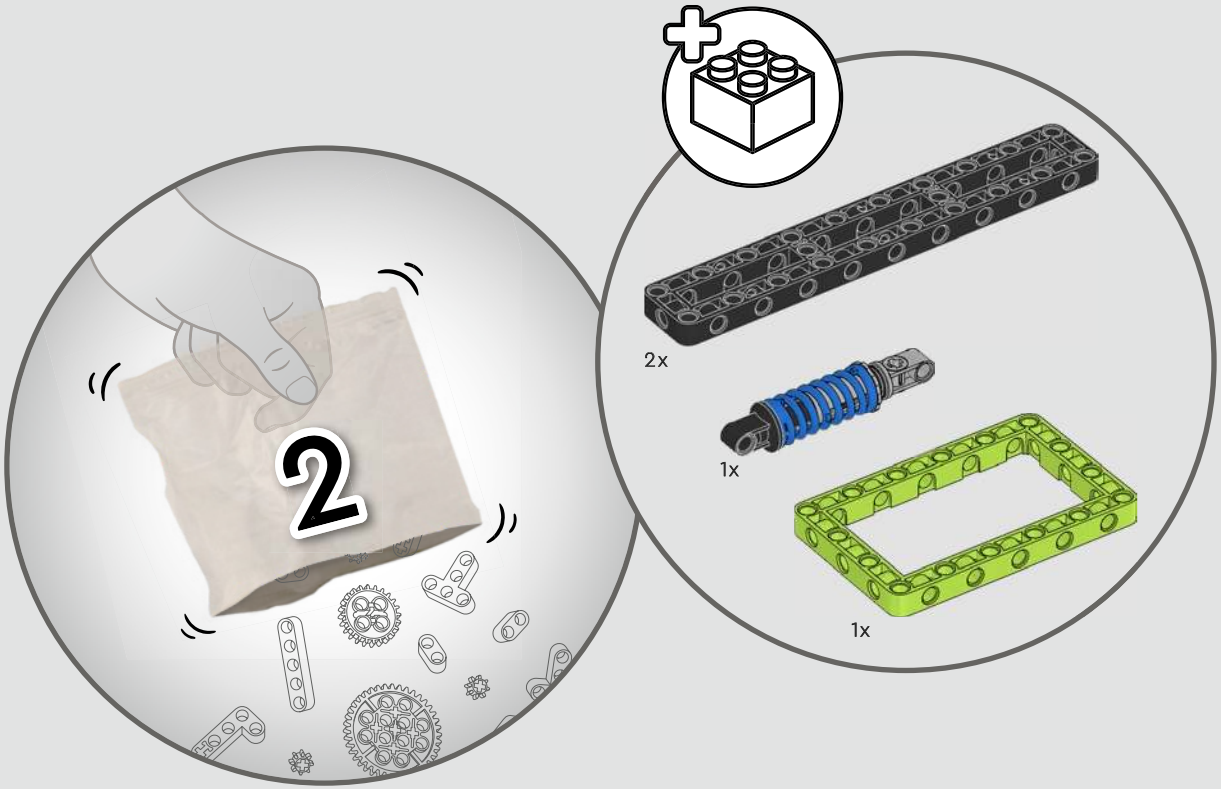
2
2x
1x
1x

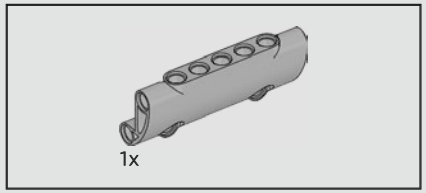

108

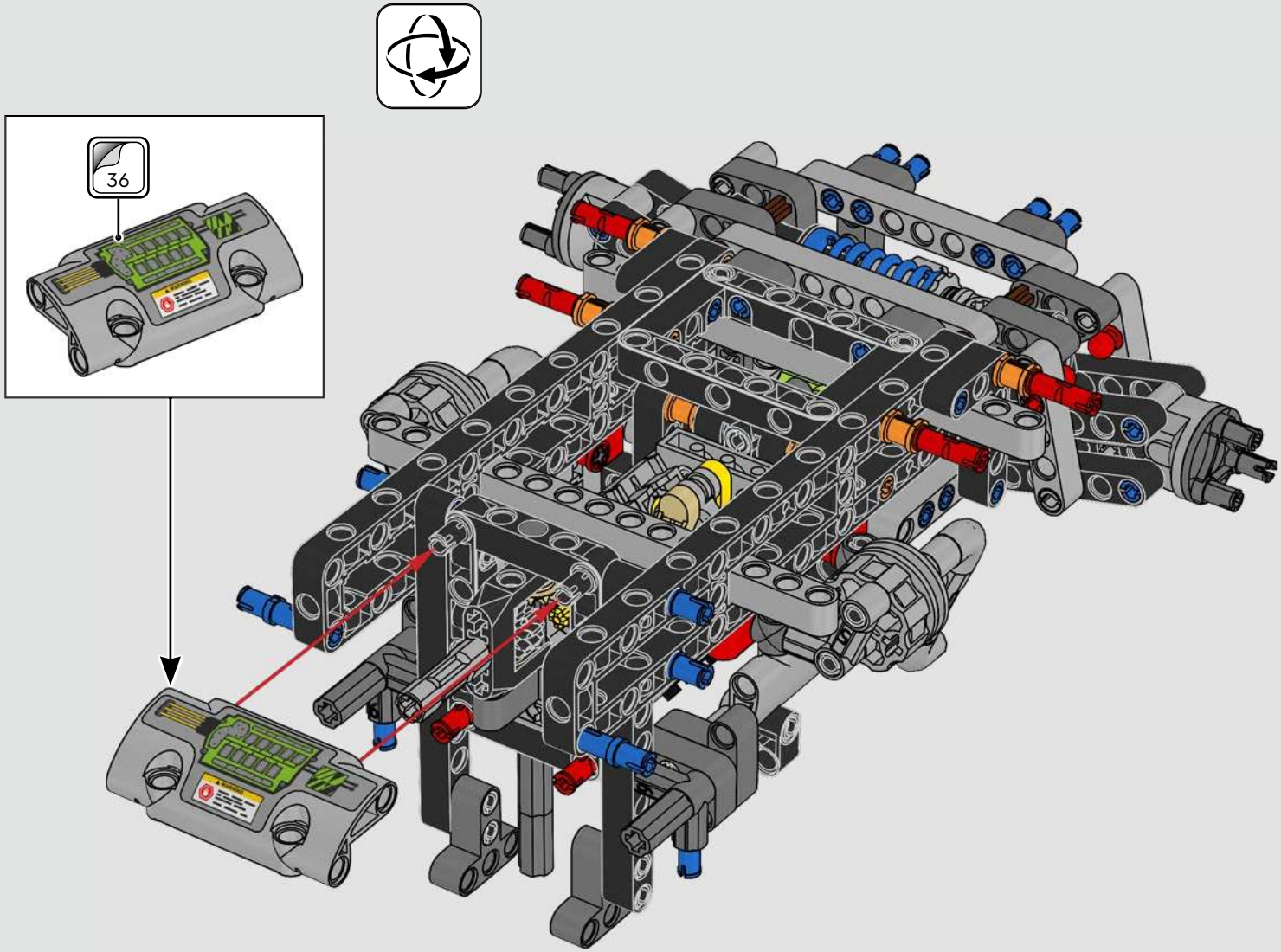

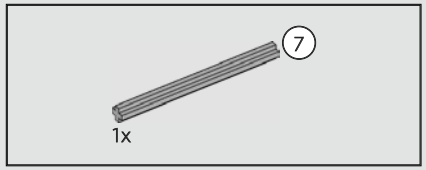

109

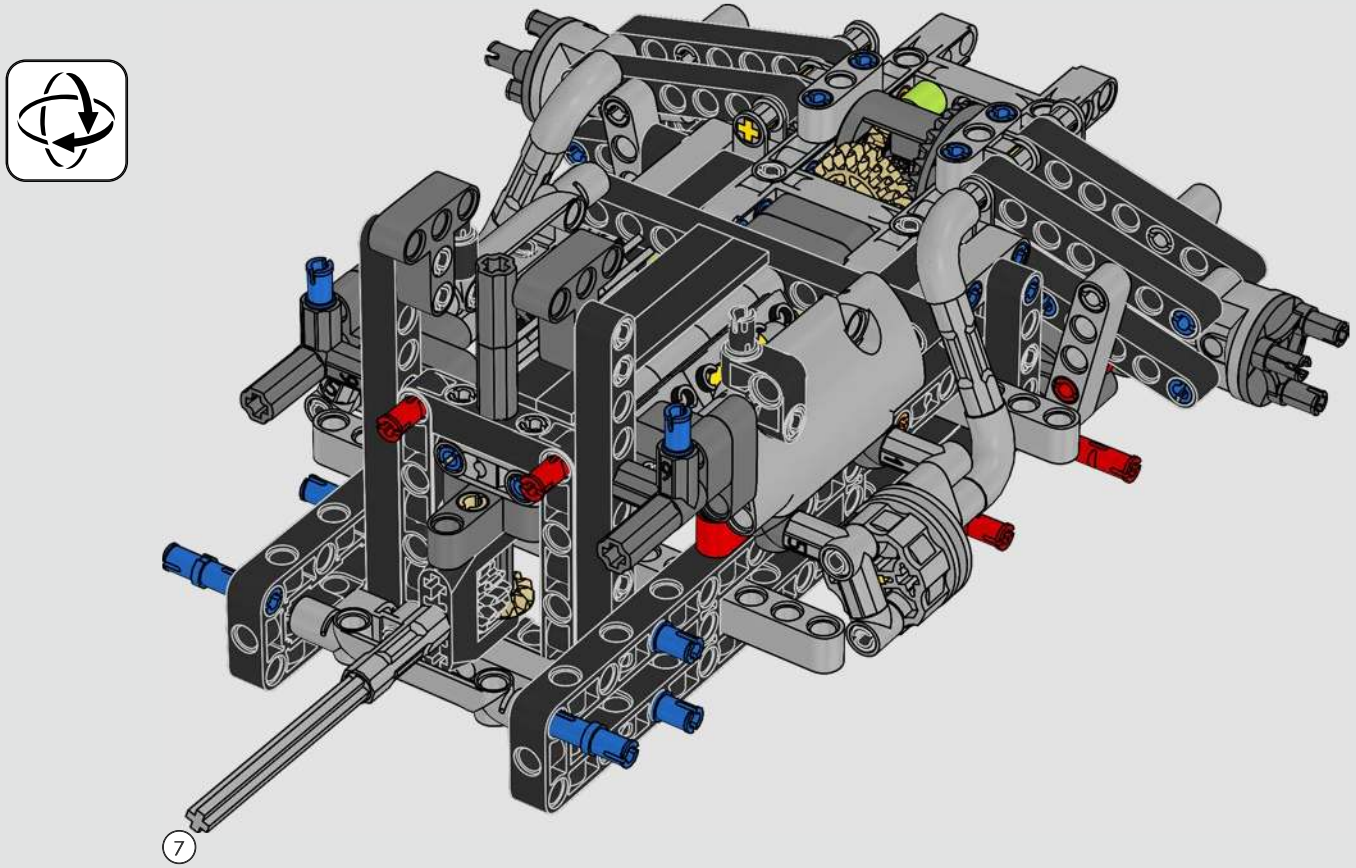

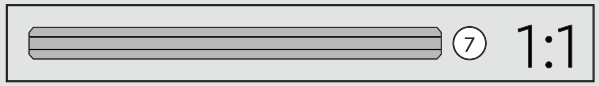

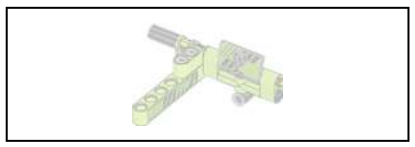

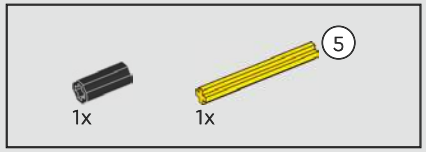

110

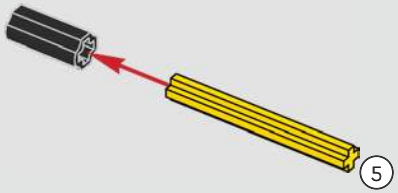

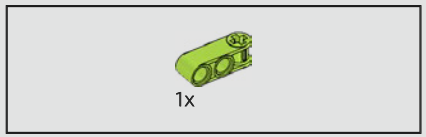

111

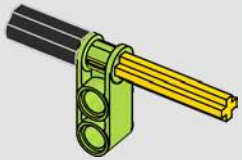

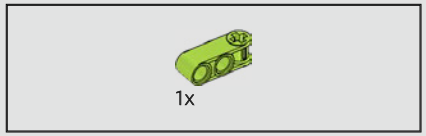

112

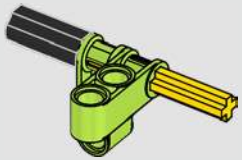

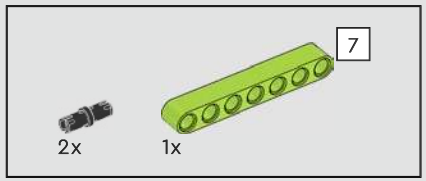

113

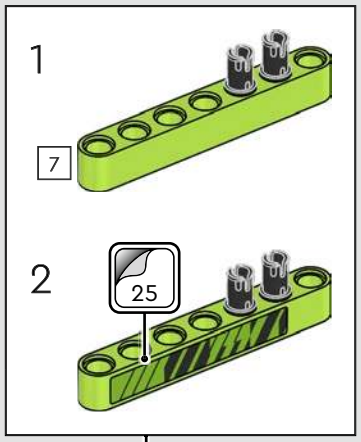

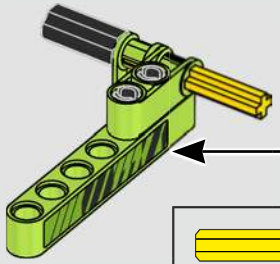

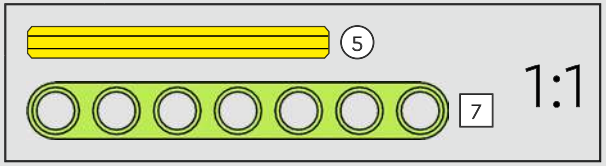

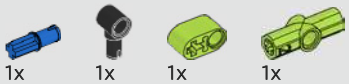

114

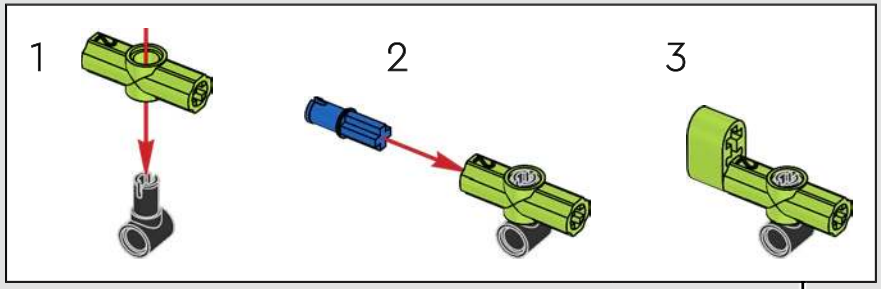

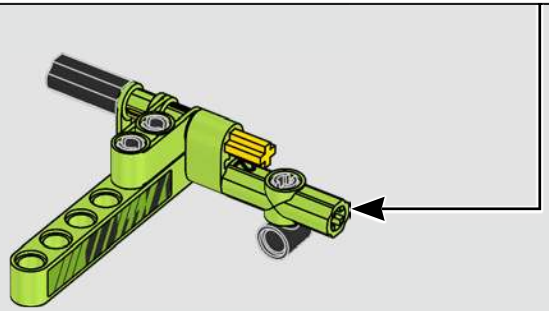

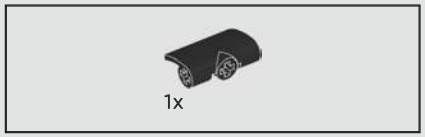

115

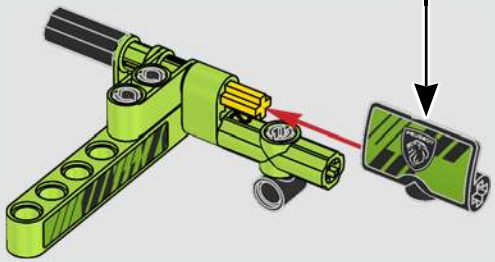

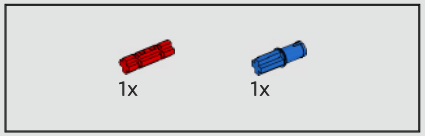

116

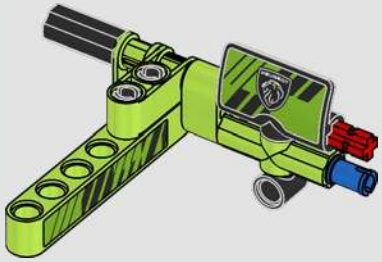

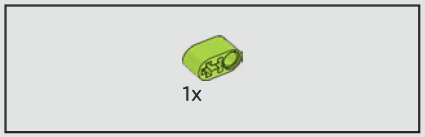

117

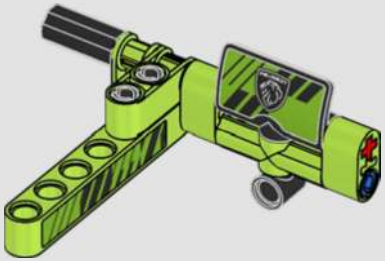

118

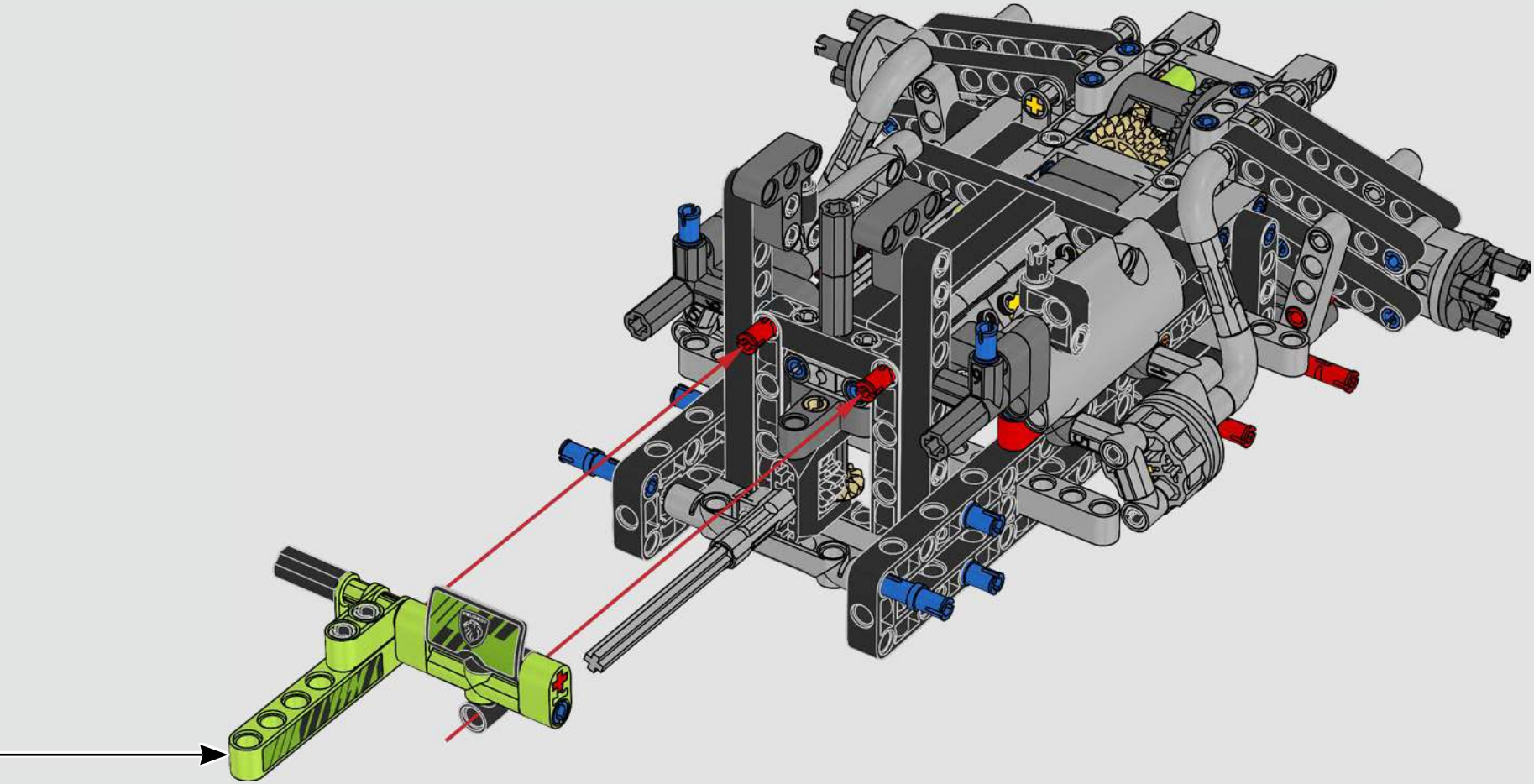

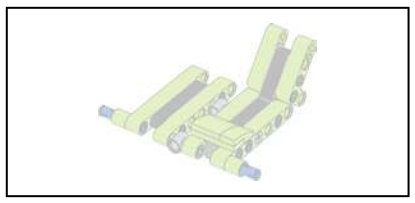

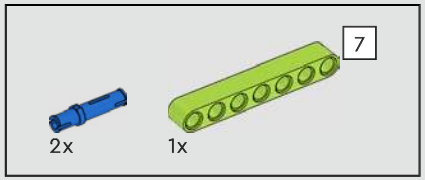

119

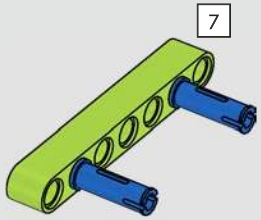

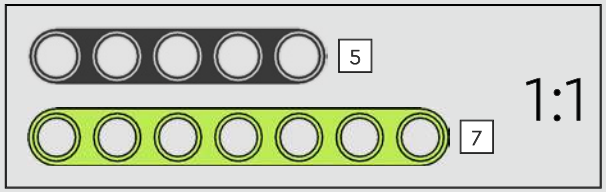

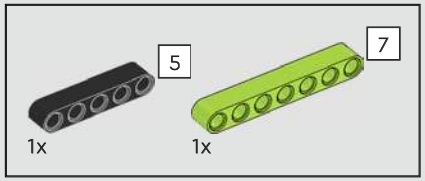

120

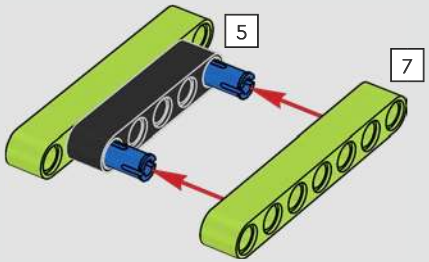

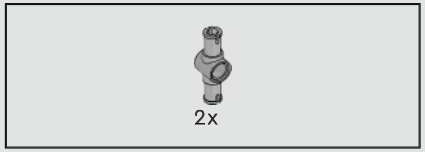

121

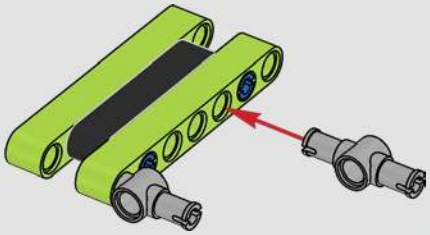

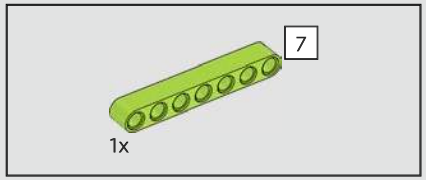

122

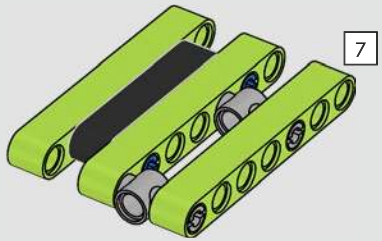

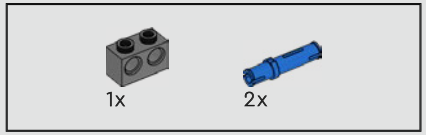

123

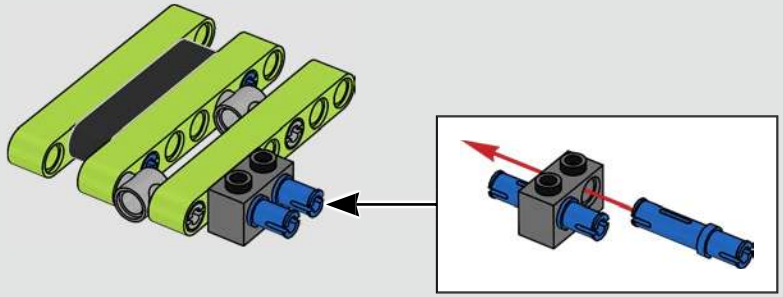

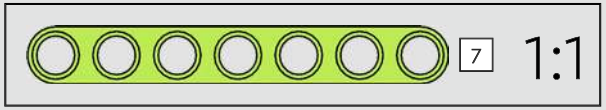

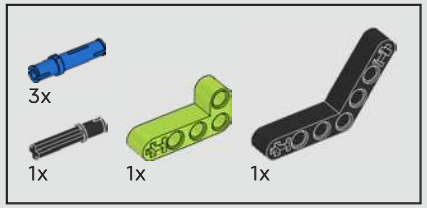

124

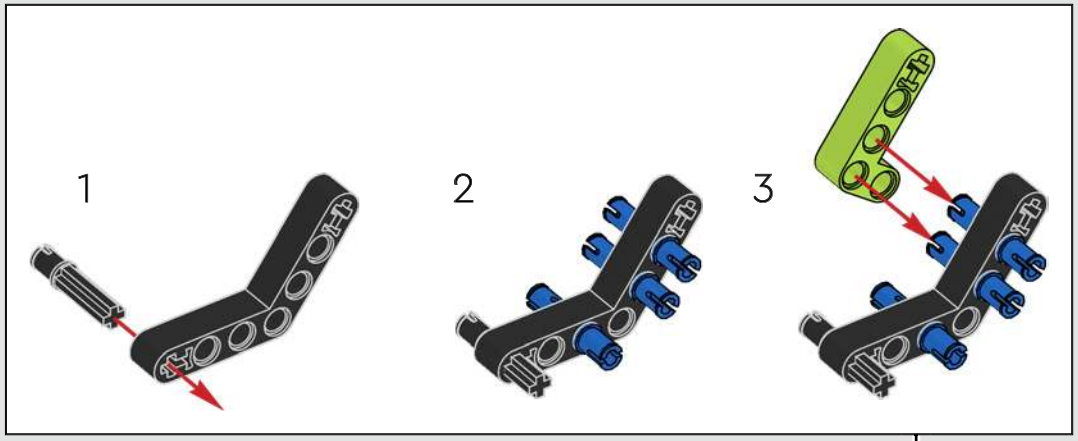

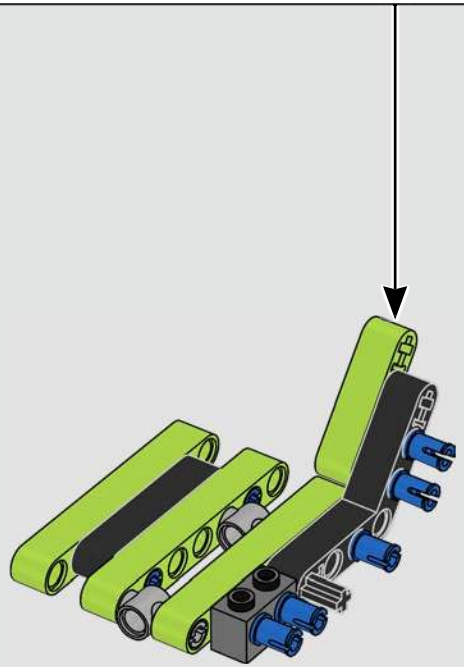

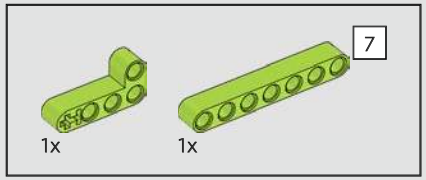

125

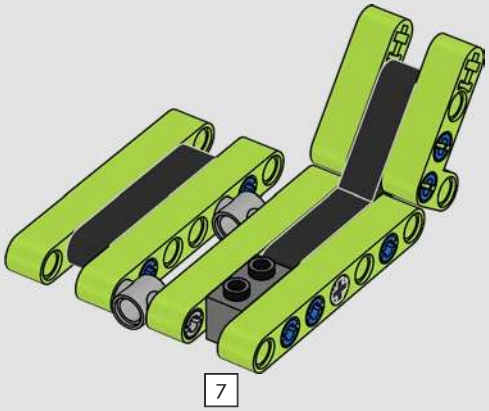

126

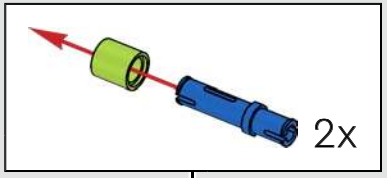

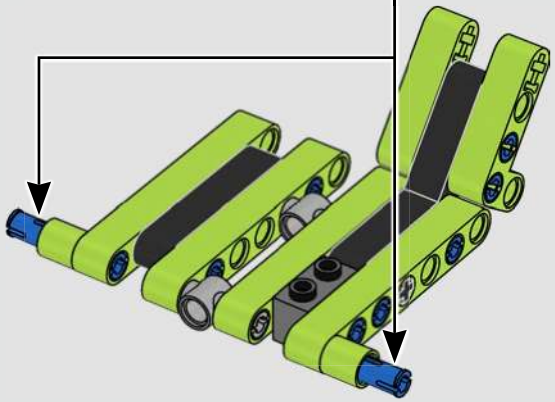

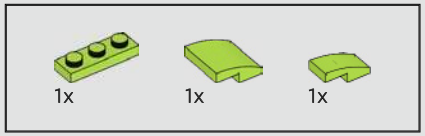

127

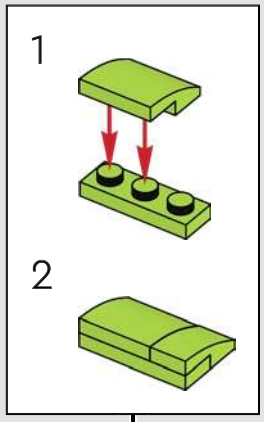

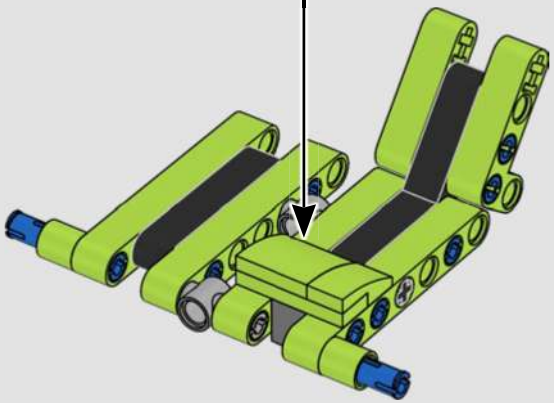

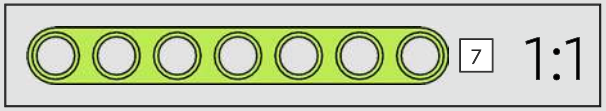

128

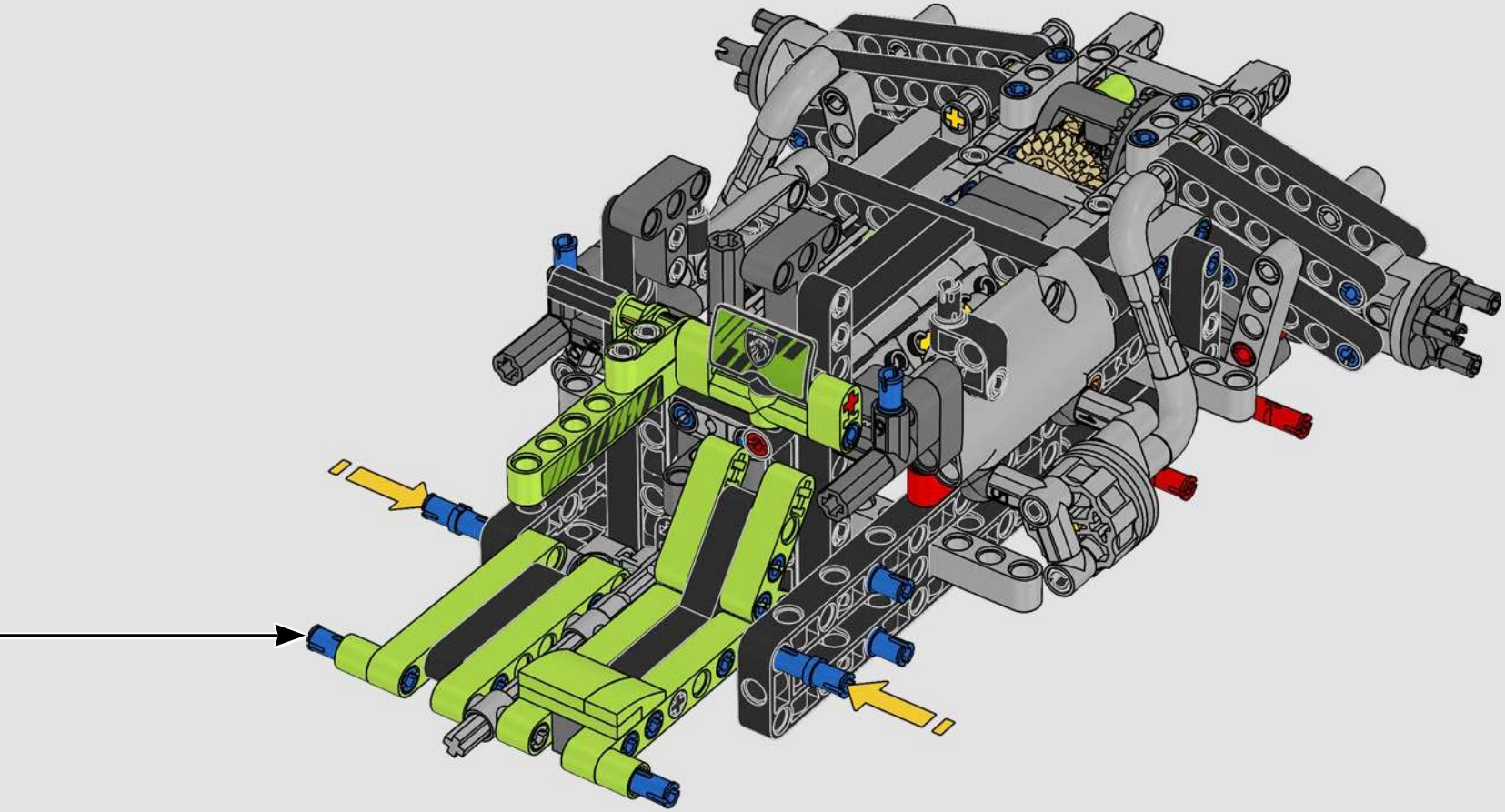

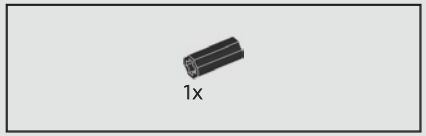

129

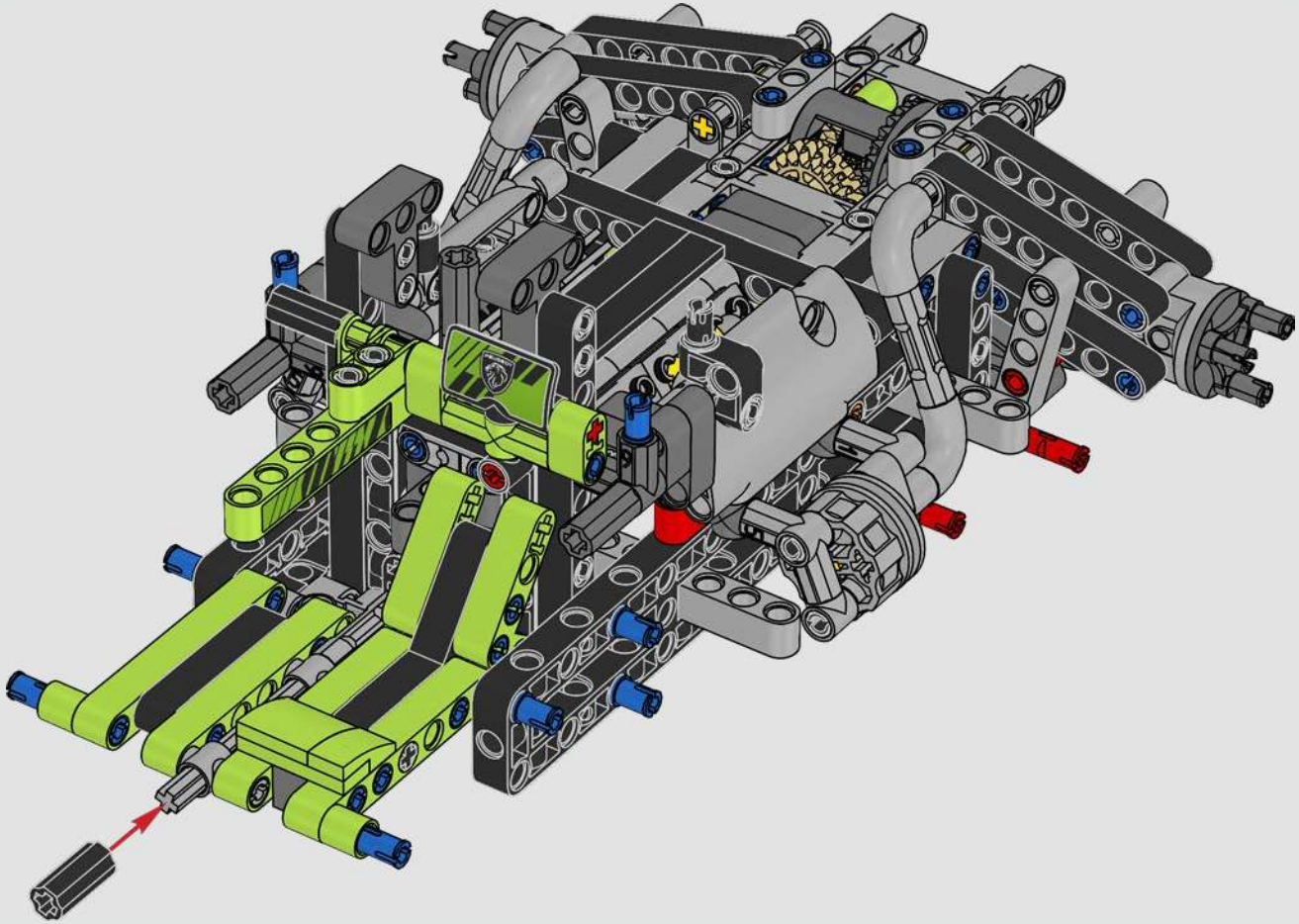

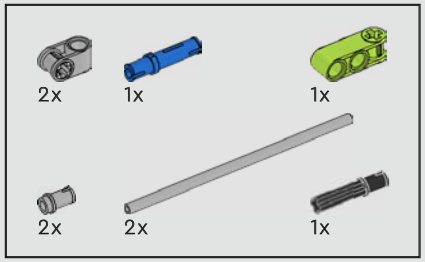

130

1

2

3

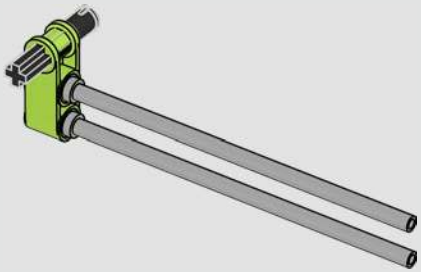

4

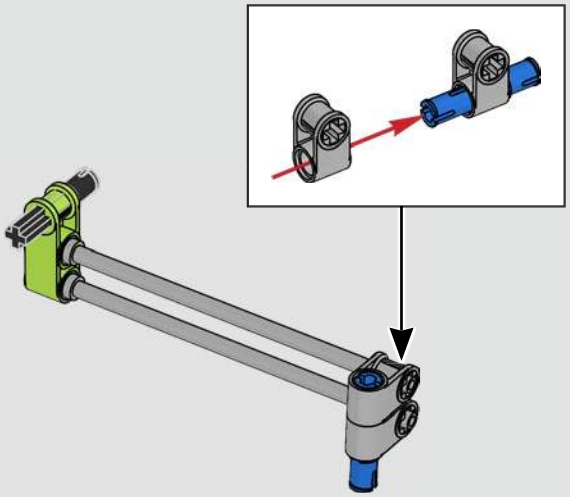

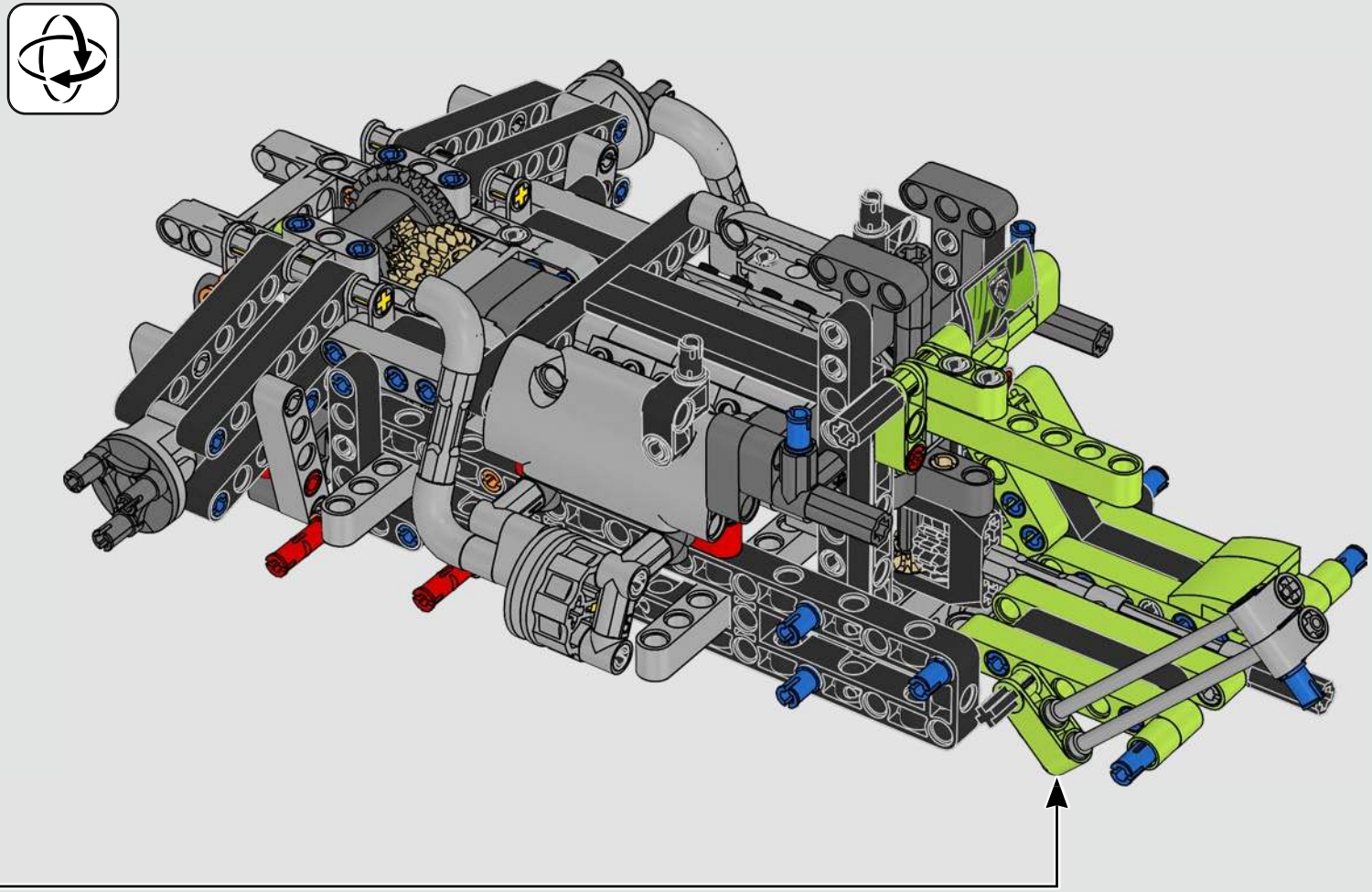

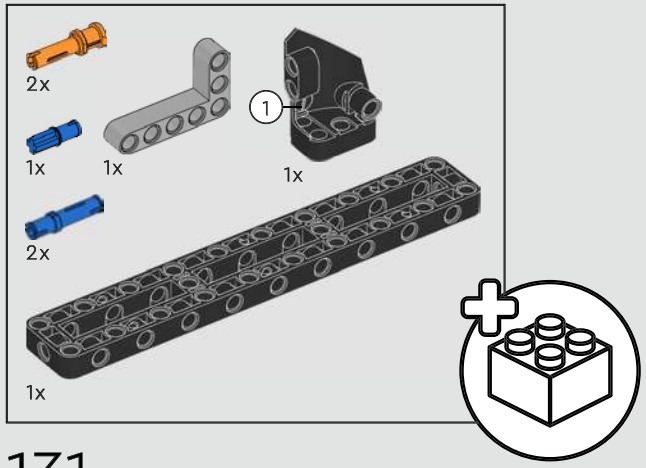

131

1

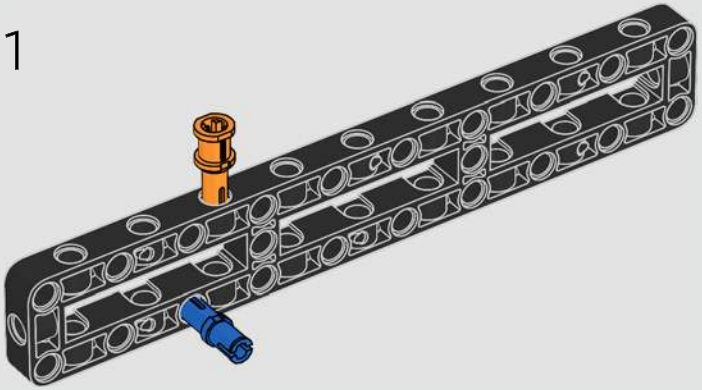

2

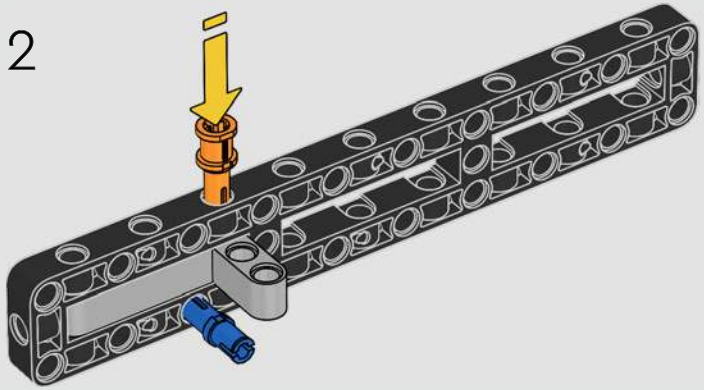

3

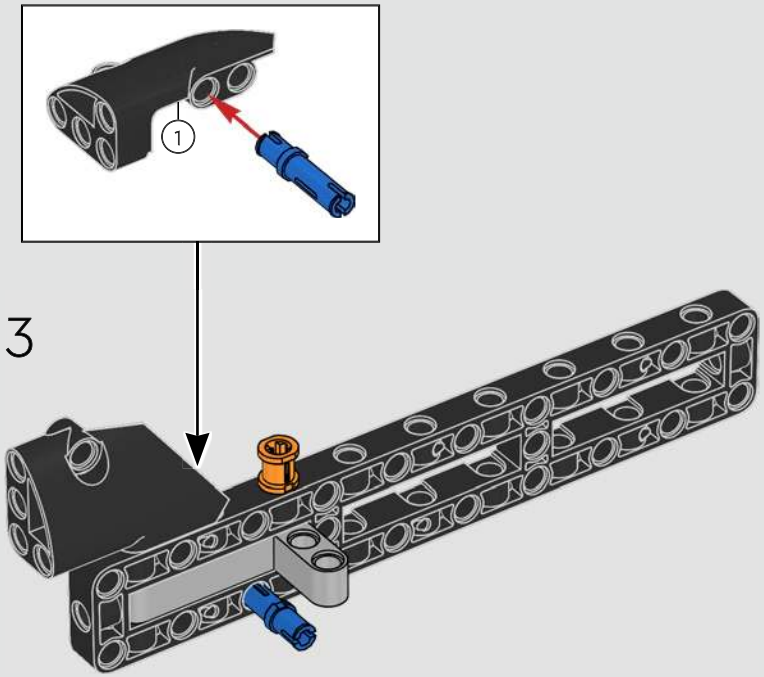

4

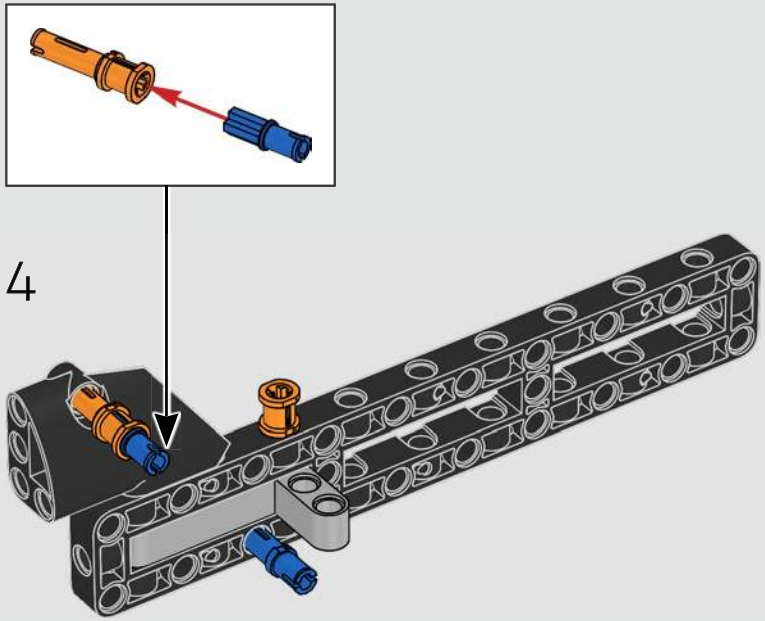

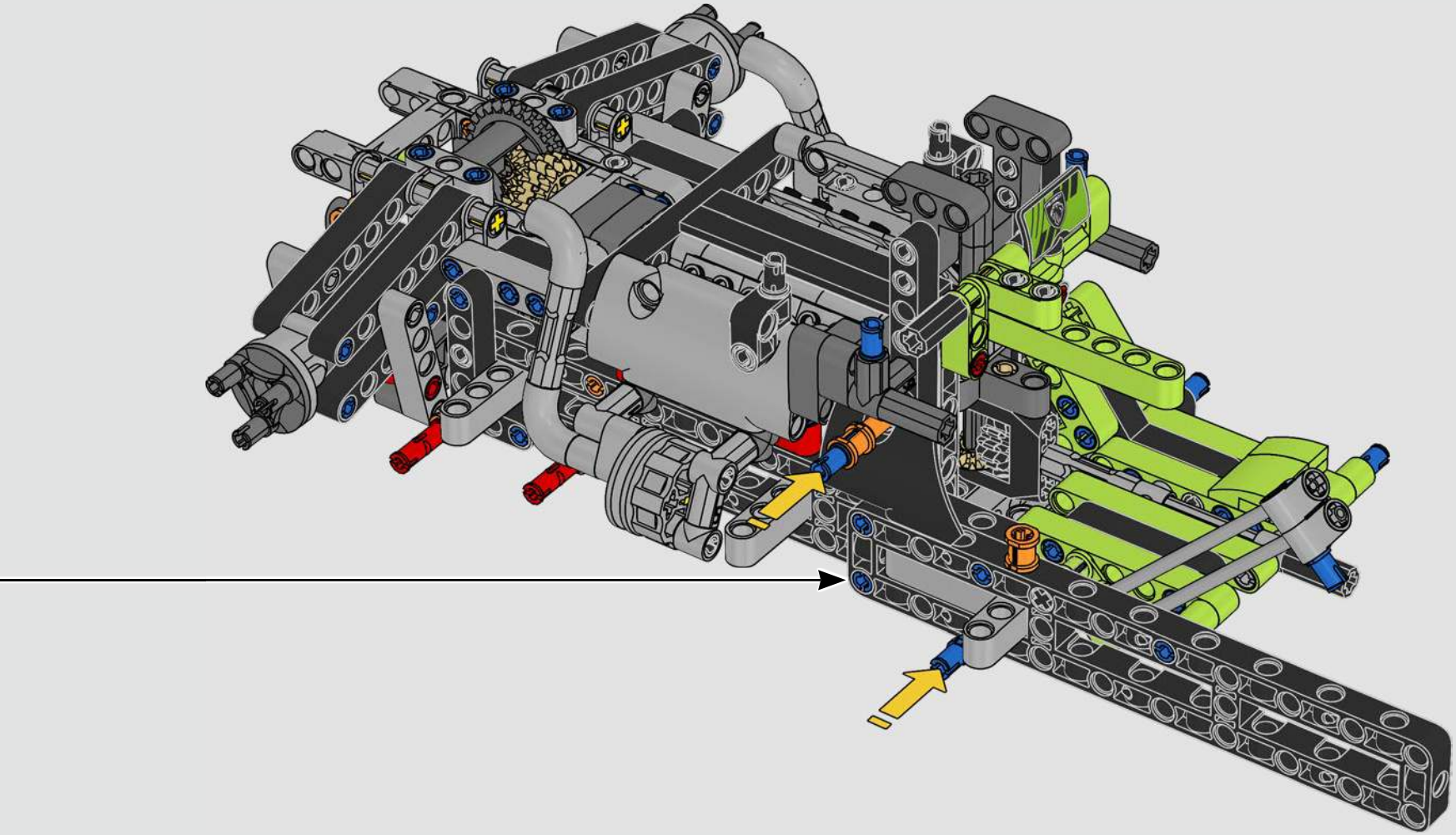

132

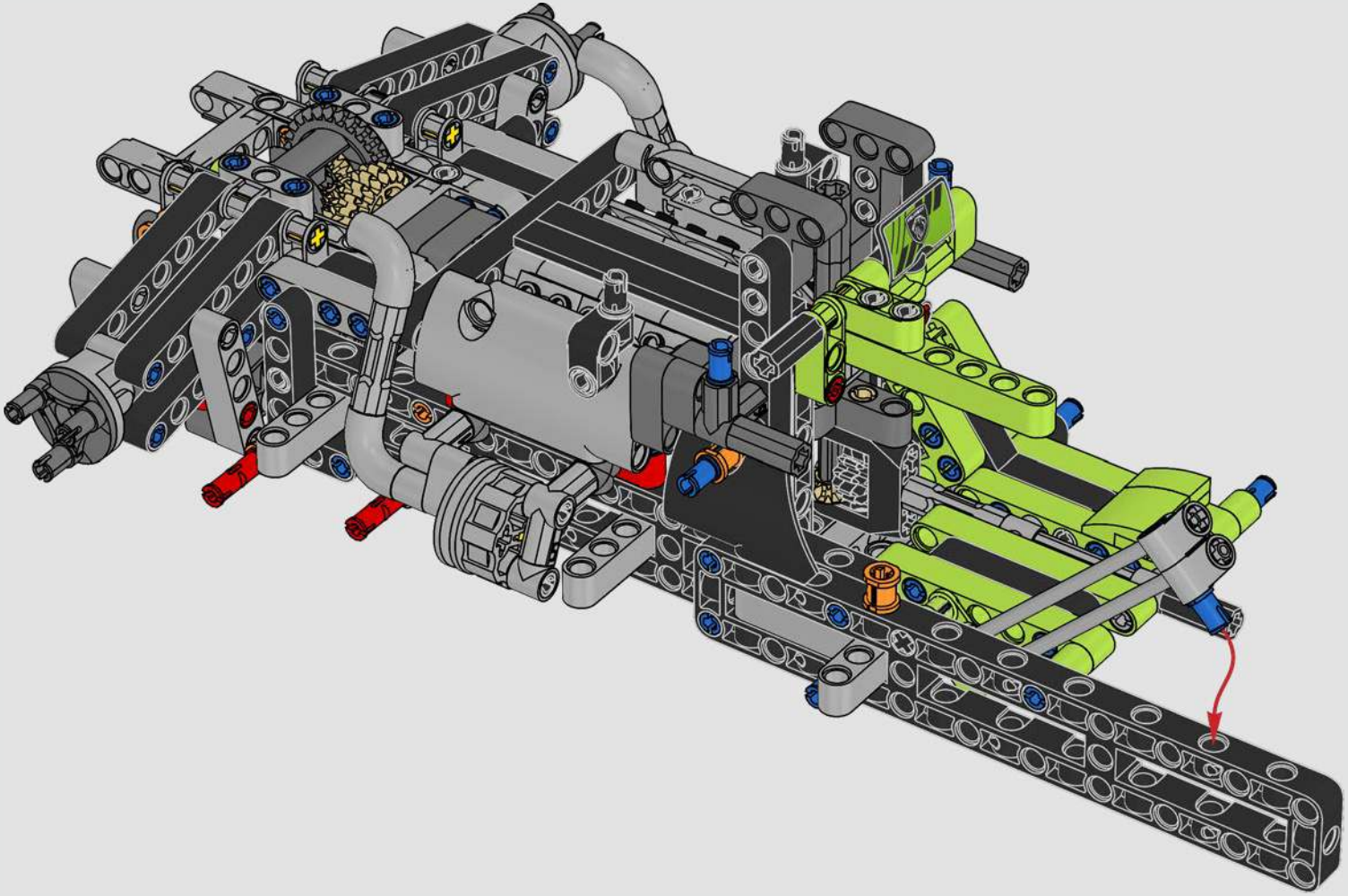

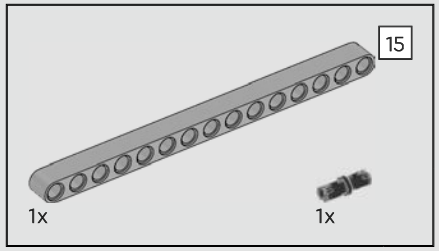

133

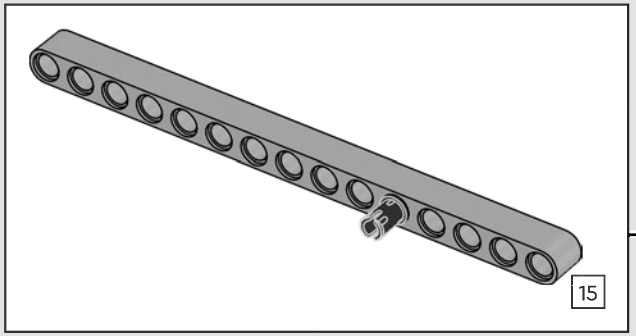

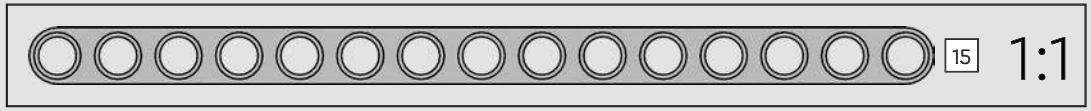

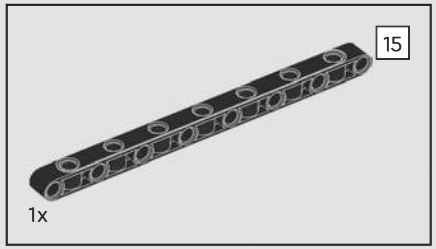

134

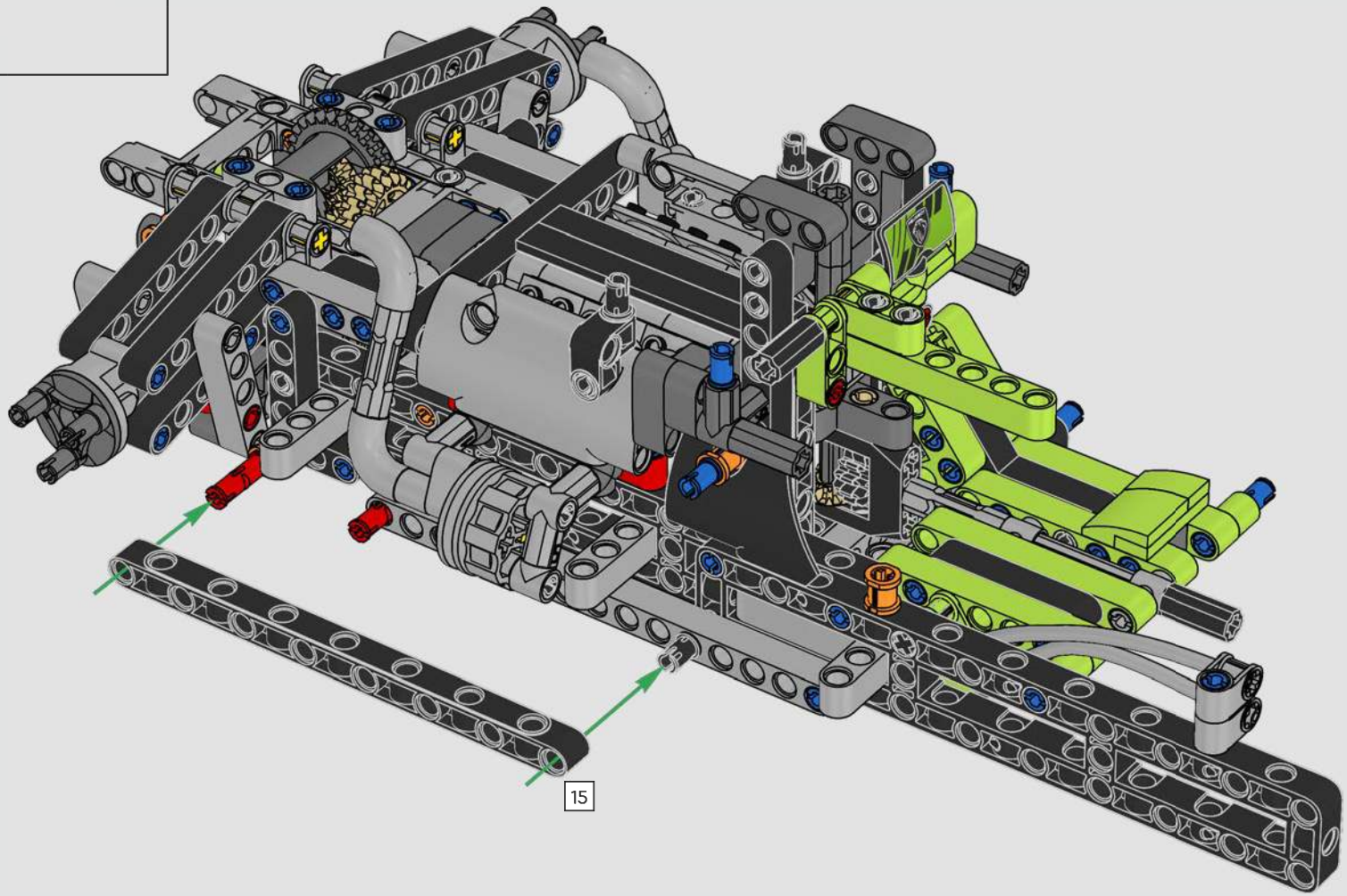

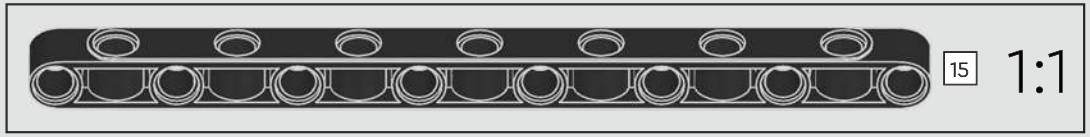

1x

135

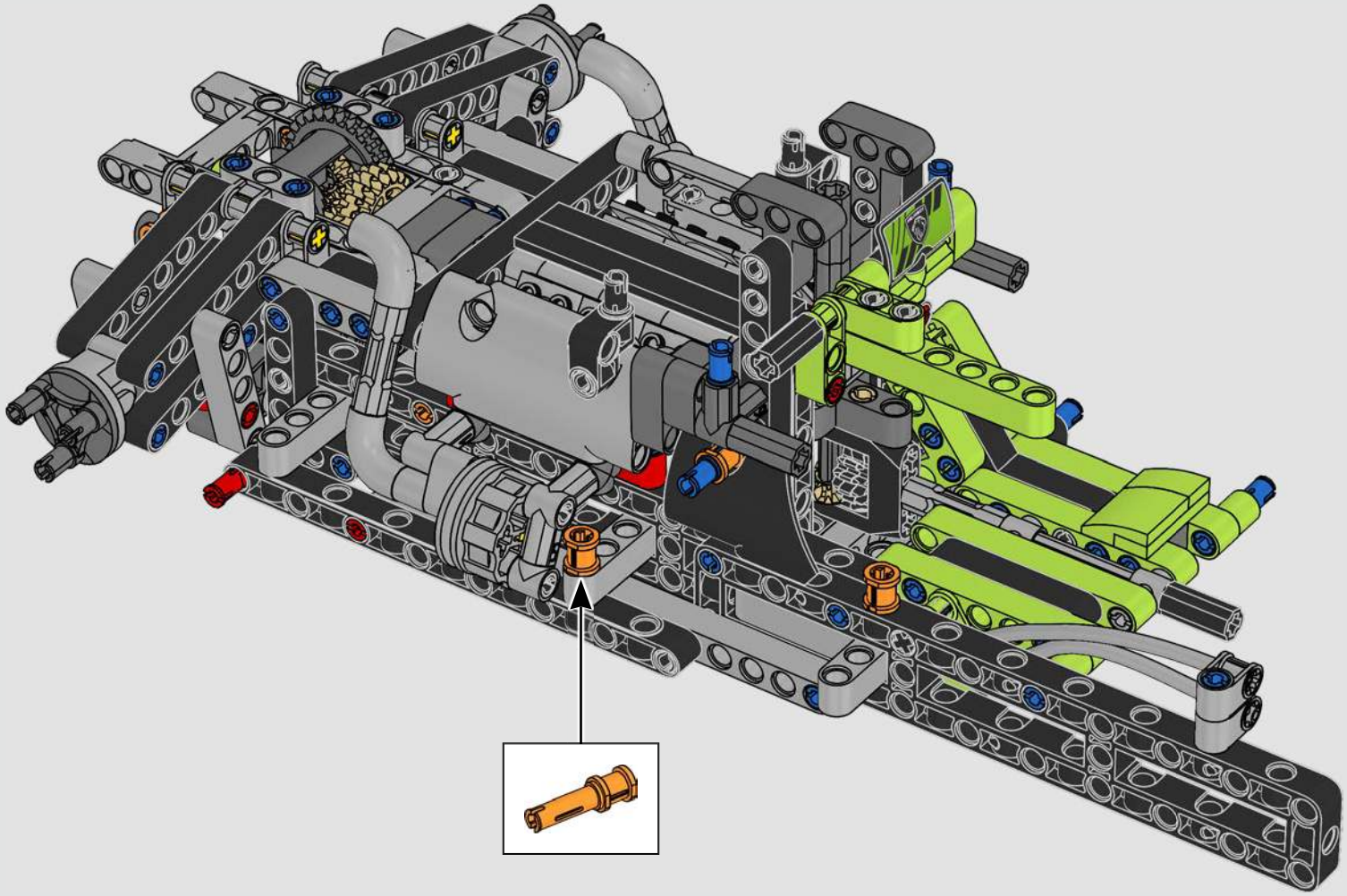

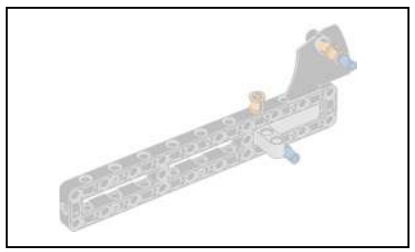

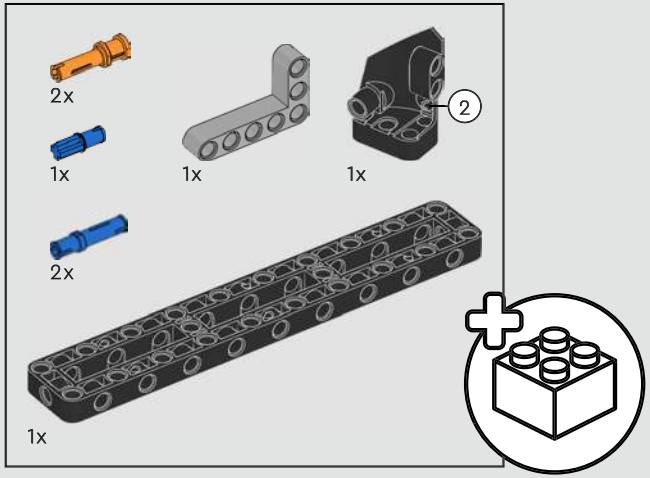

136

1

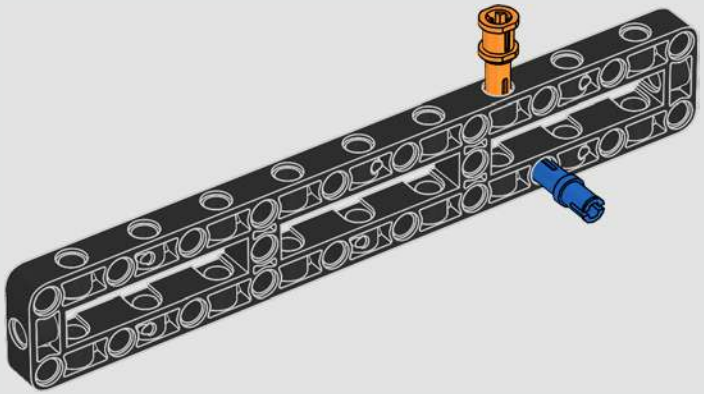

2

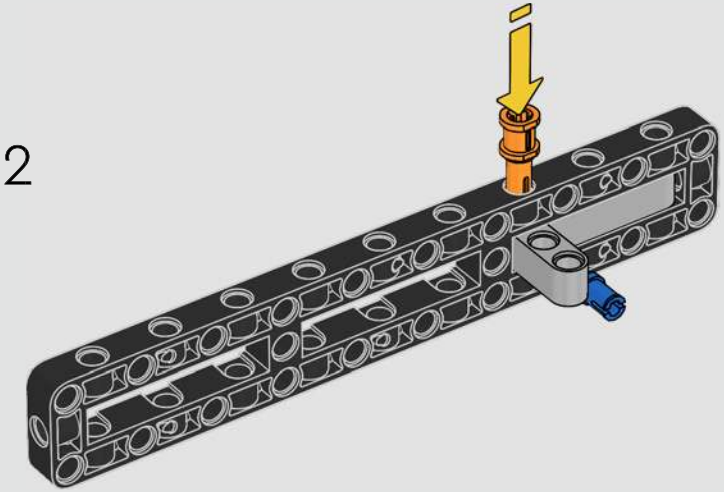

3

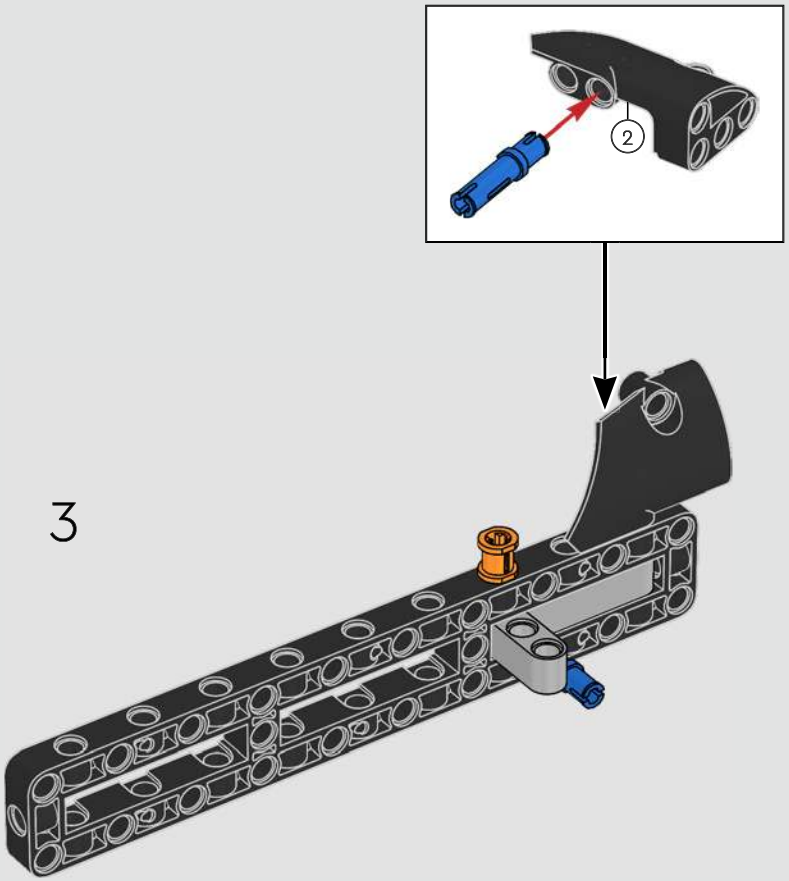

4

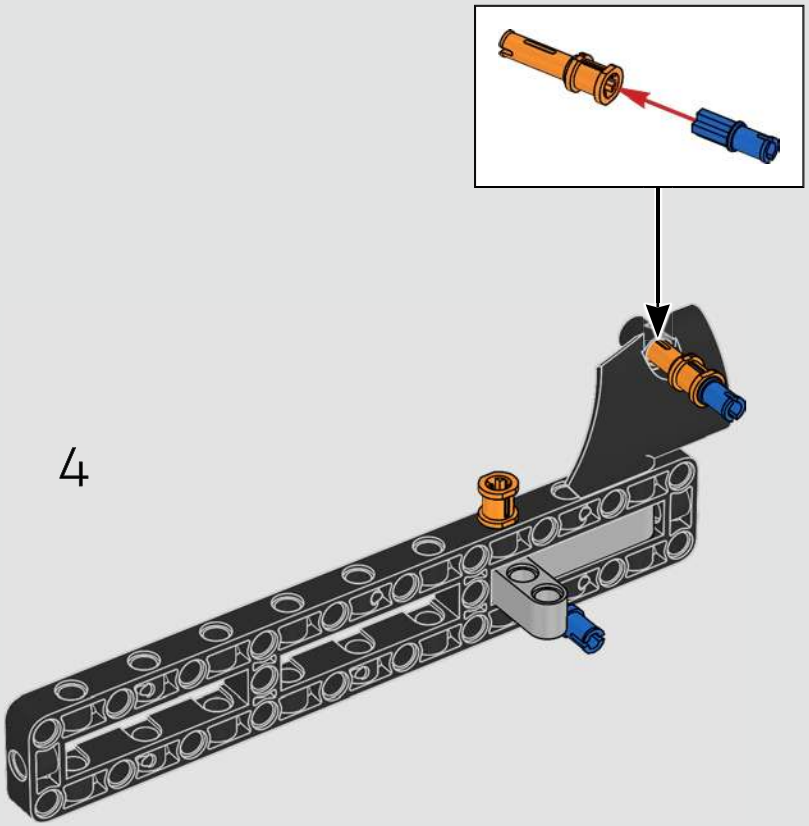

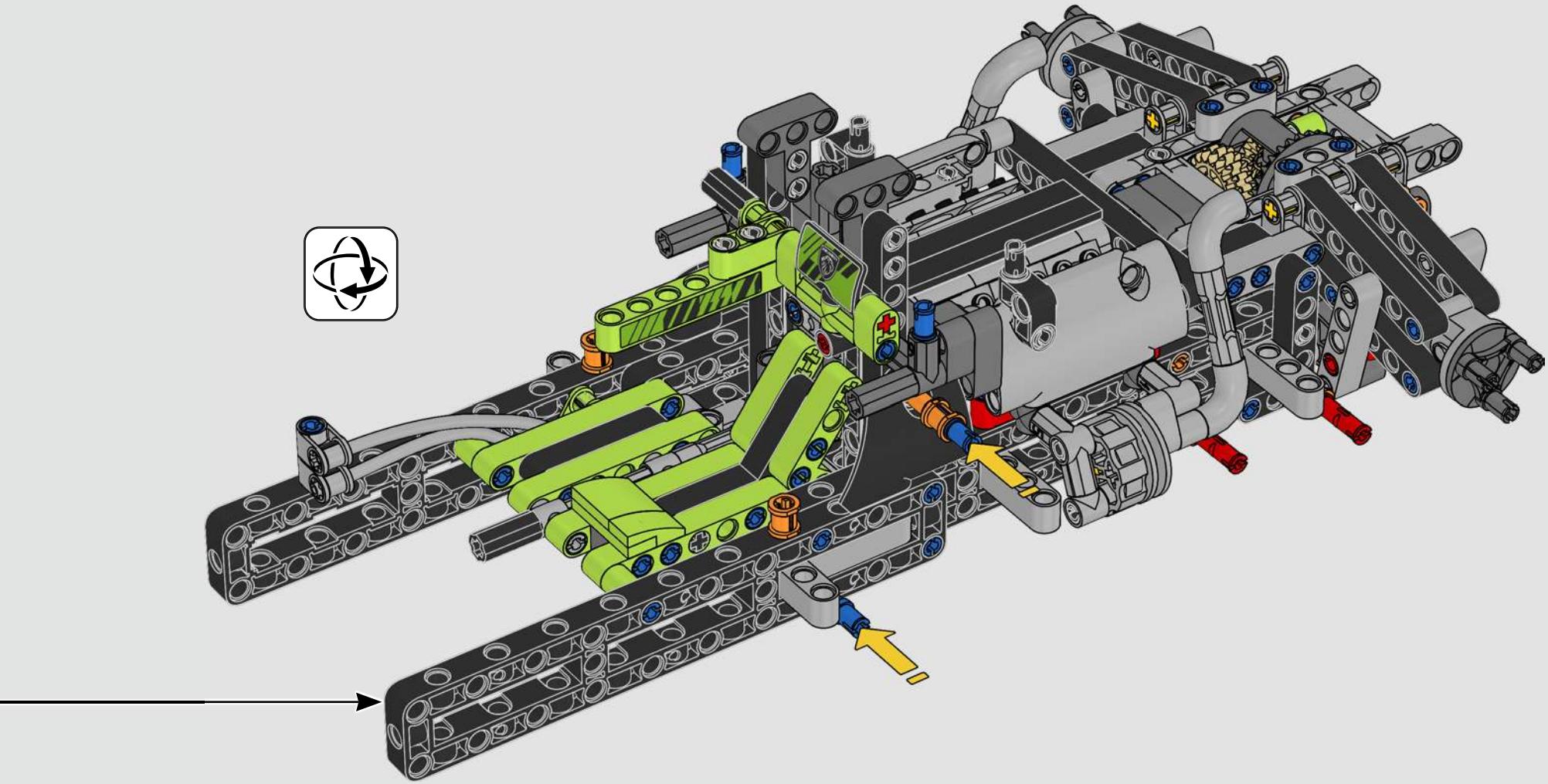

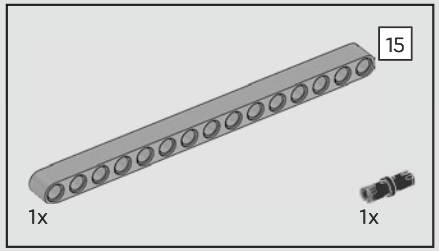

137

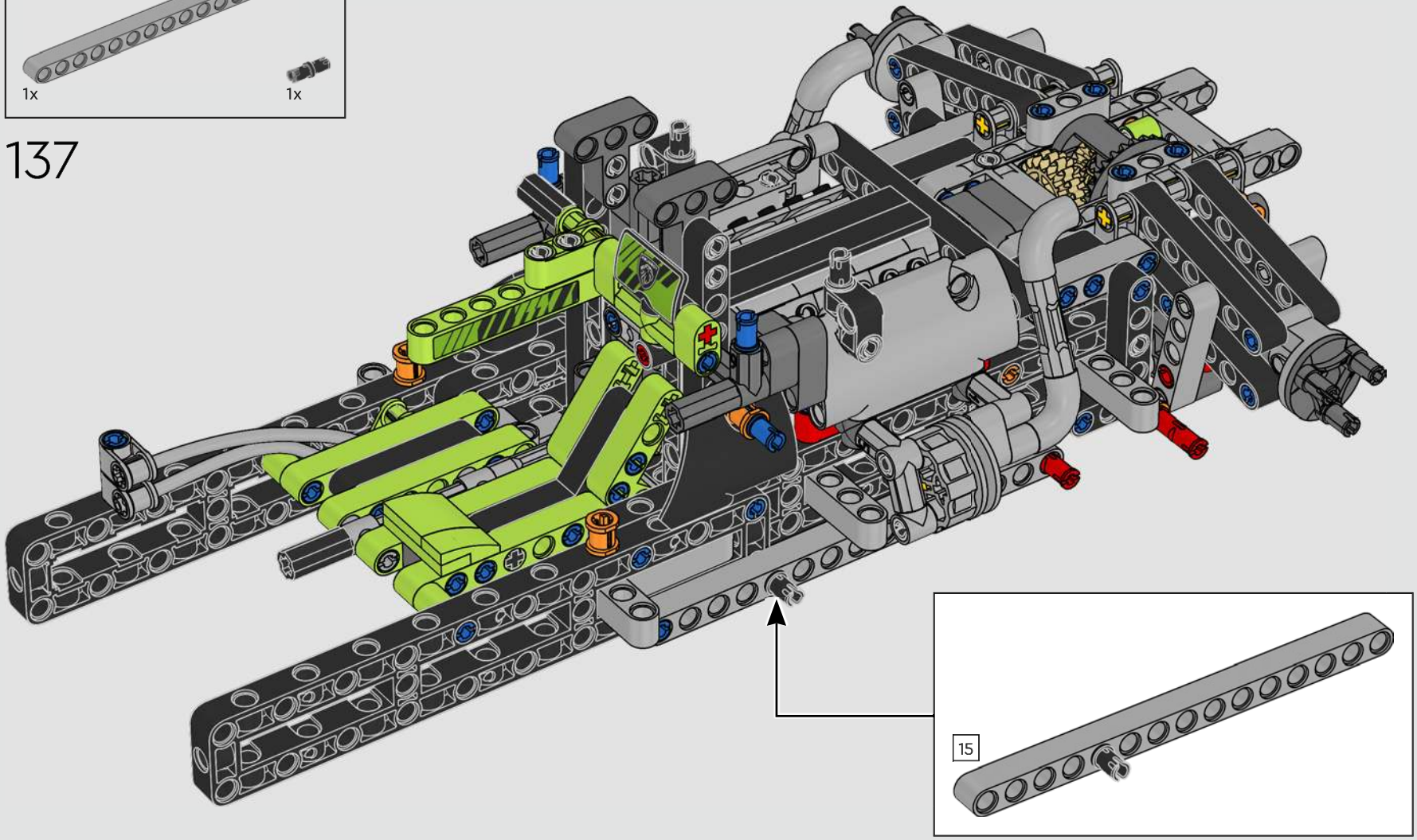

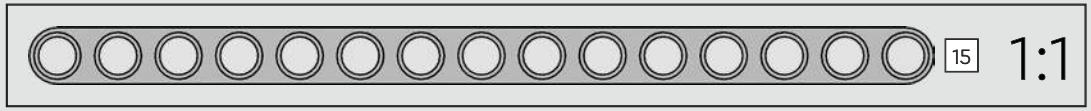

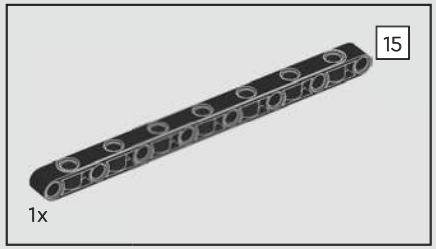

138

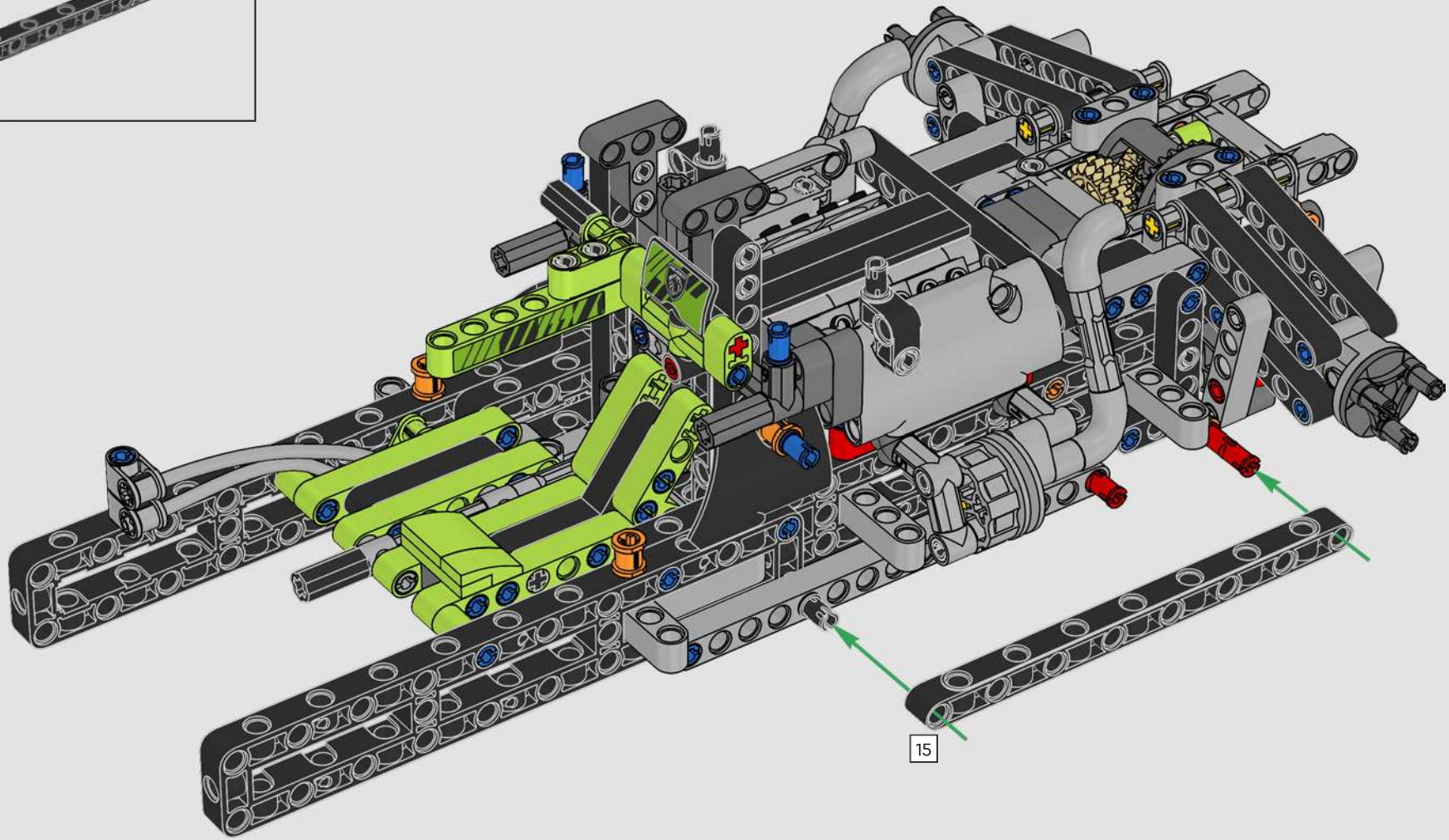

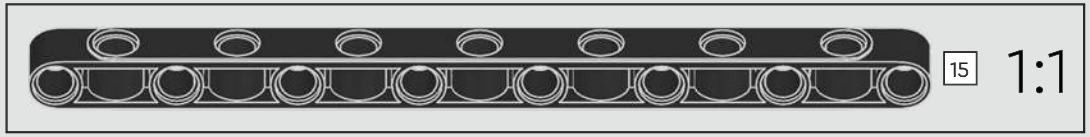

139

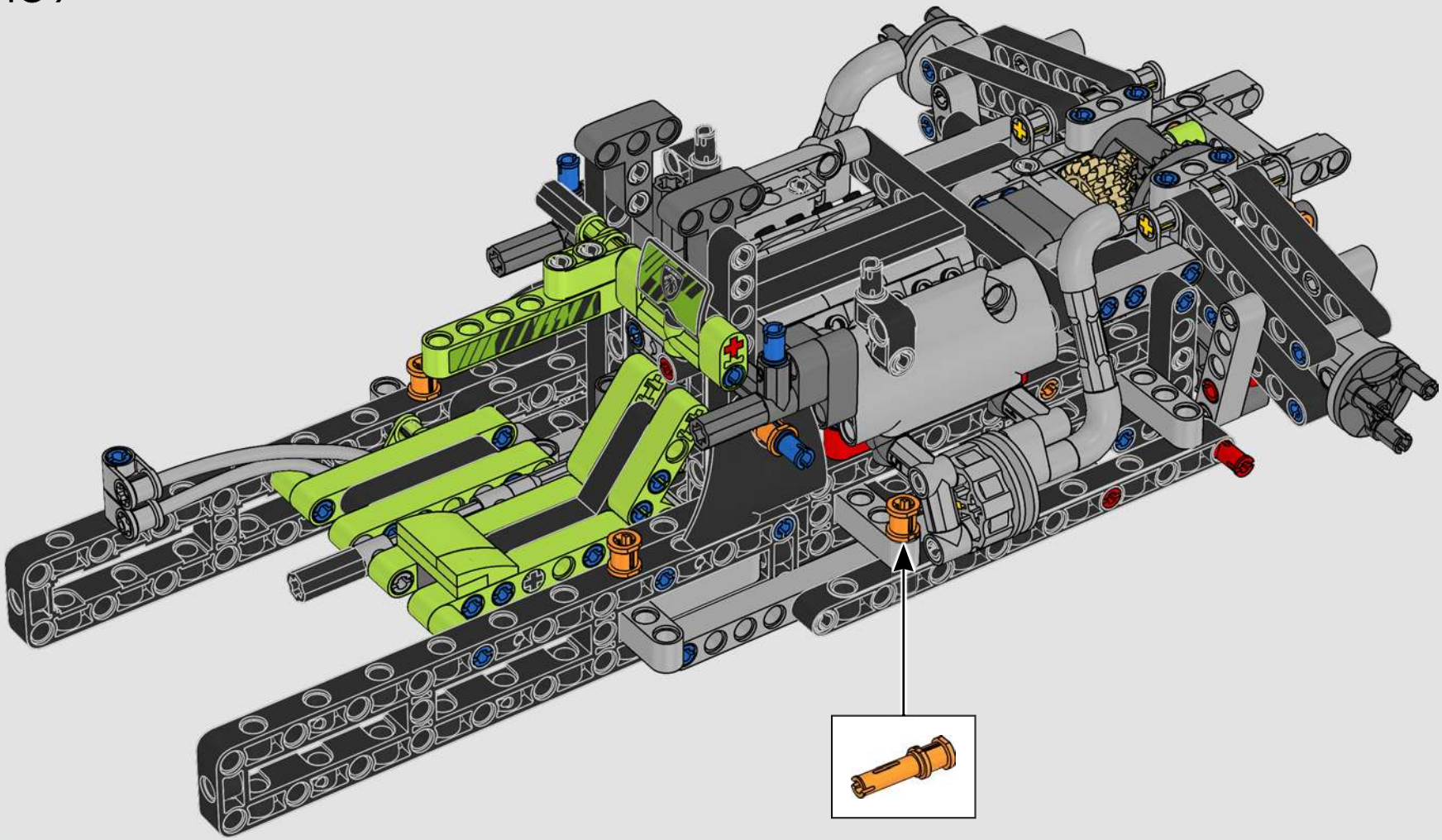

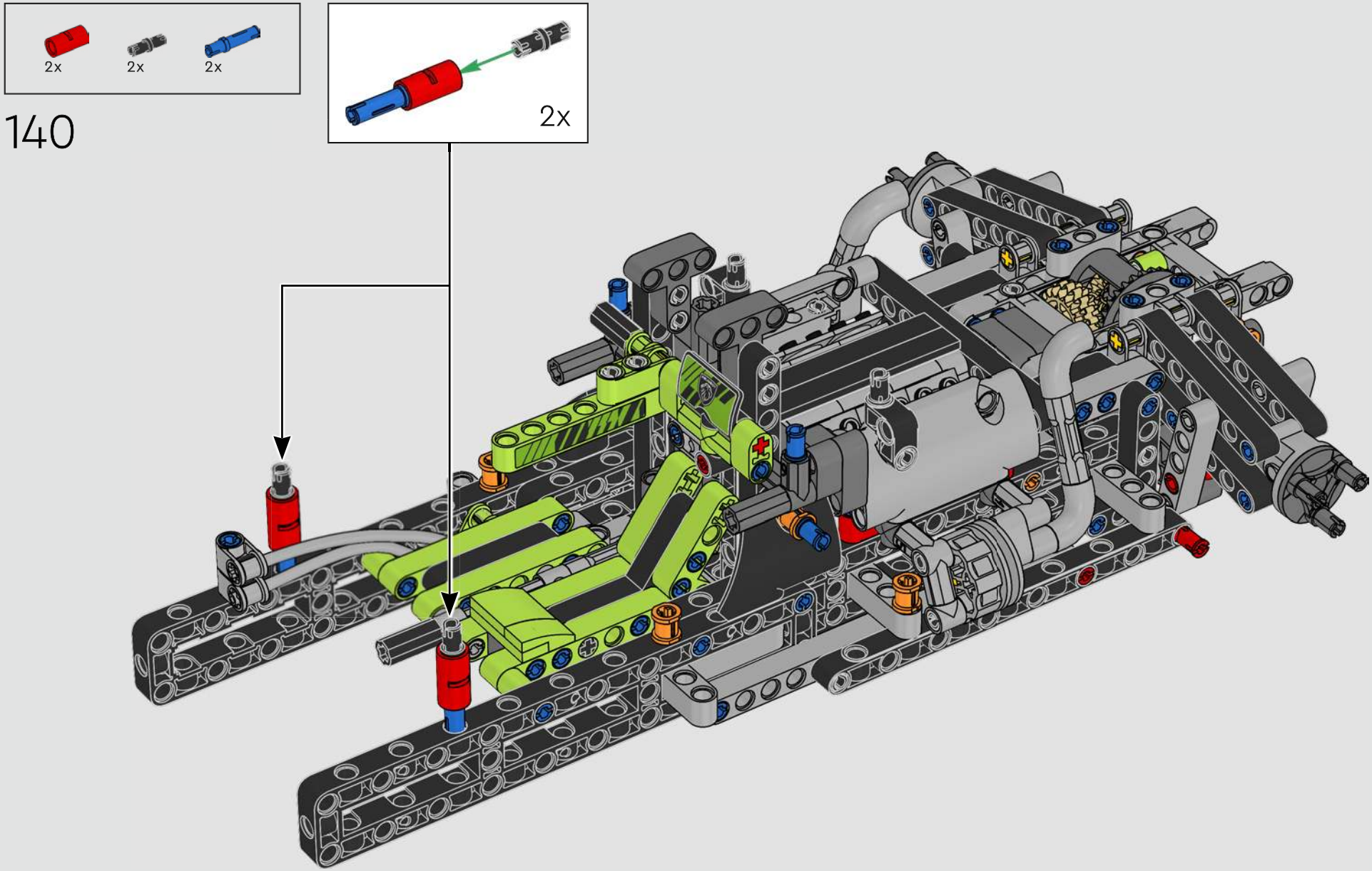
2x
2x
2x
140
2x

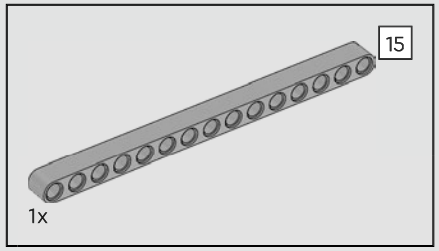

141

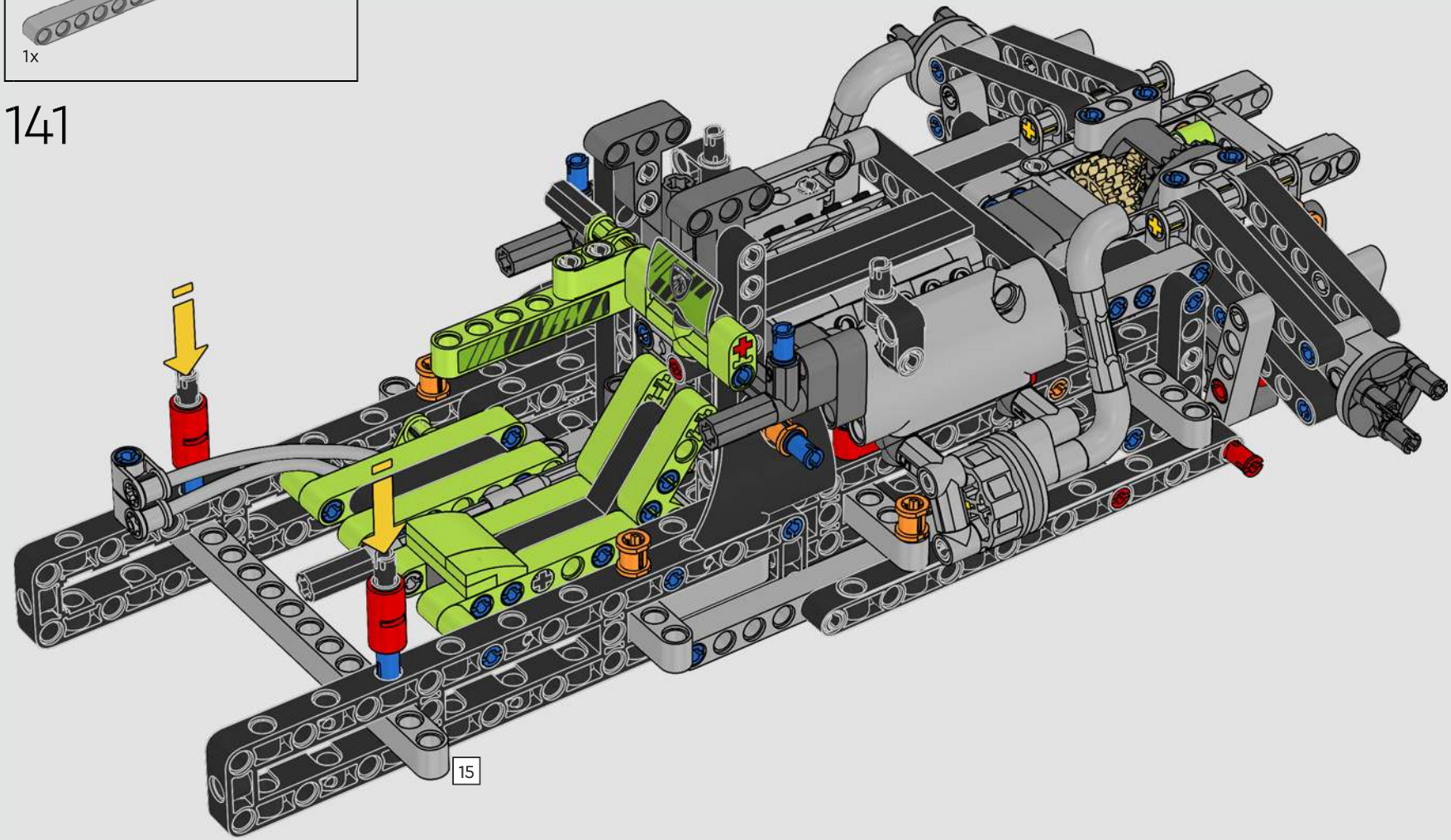

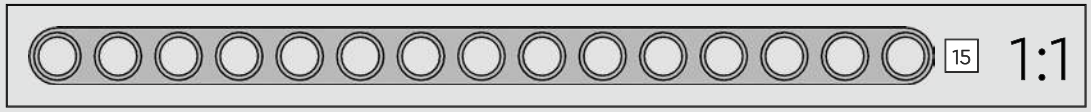

142

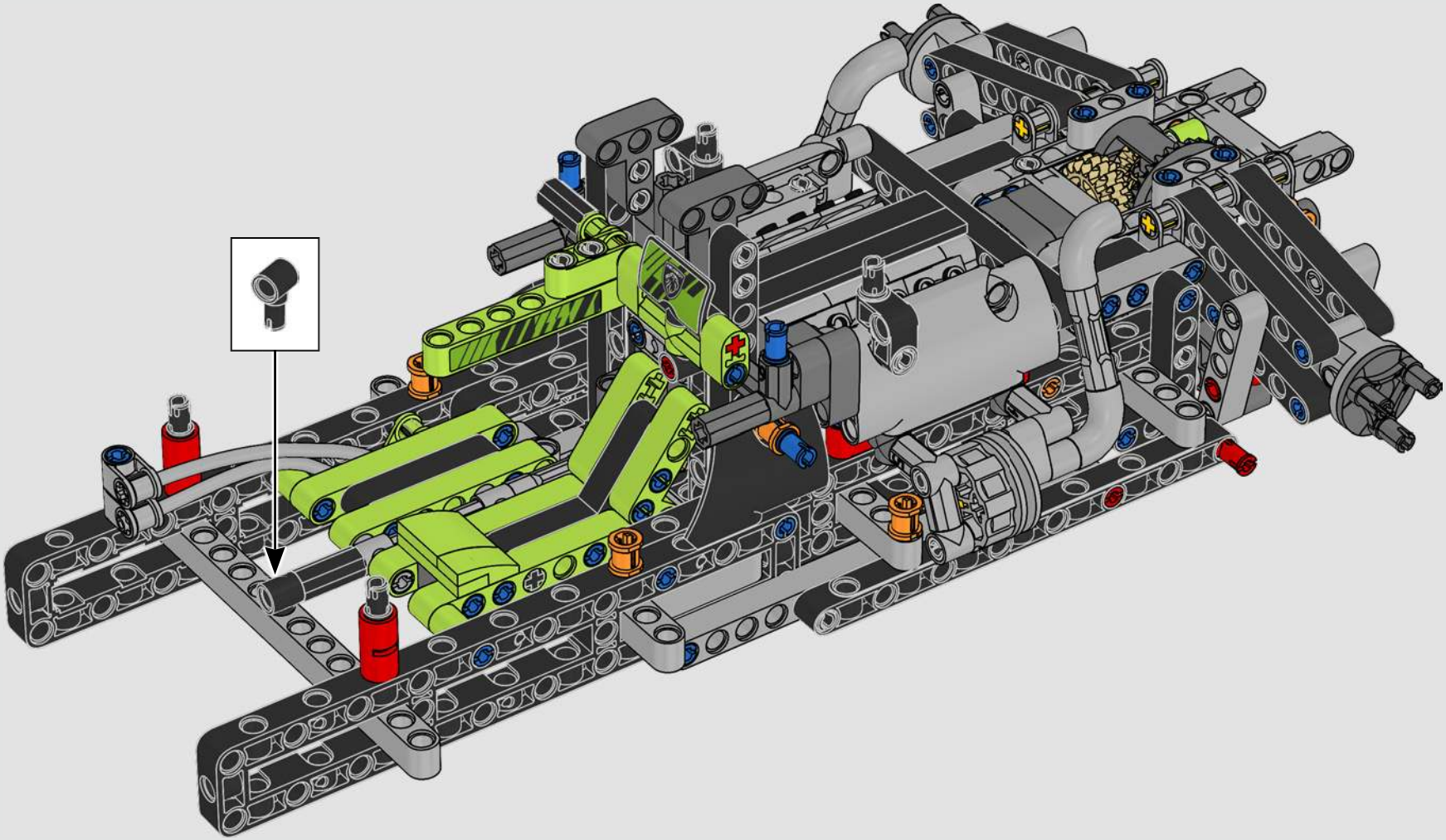

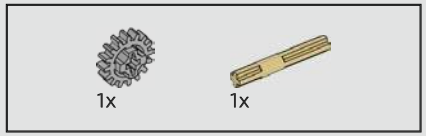

143

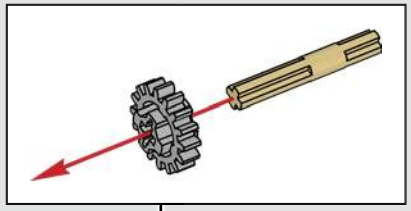

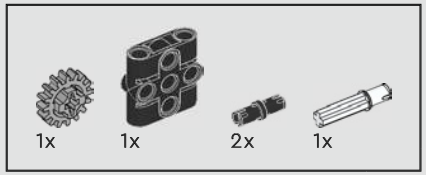

144

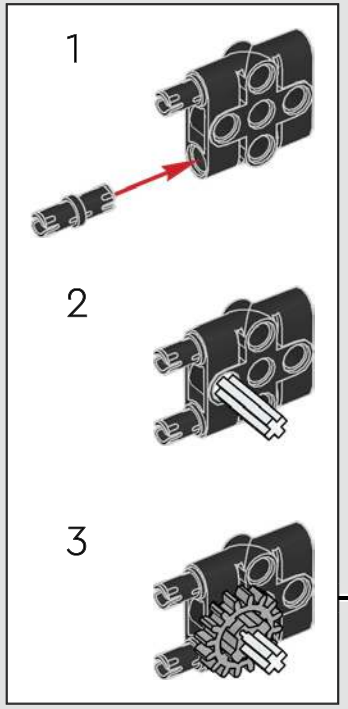

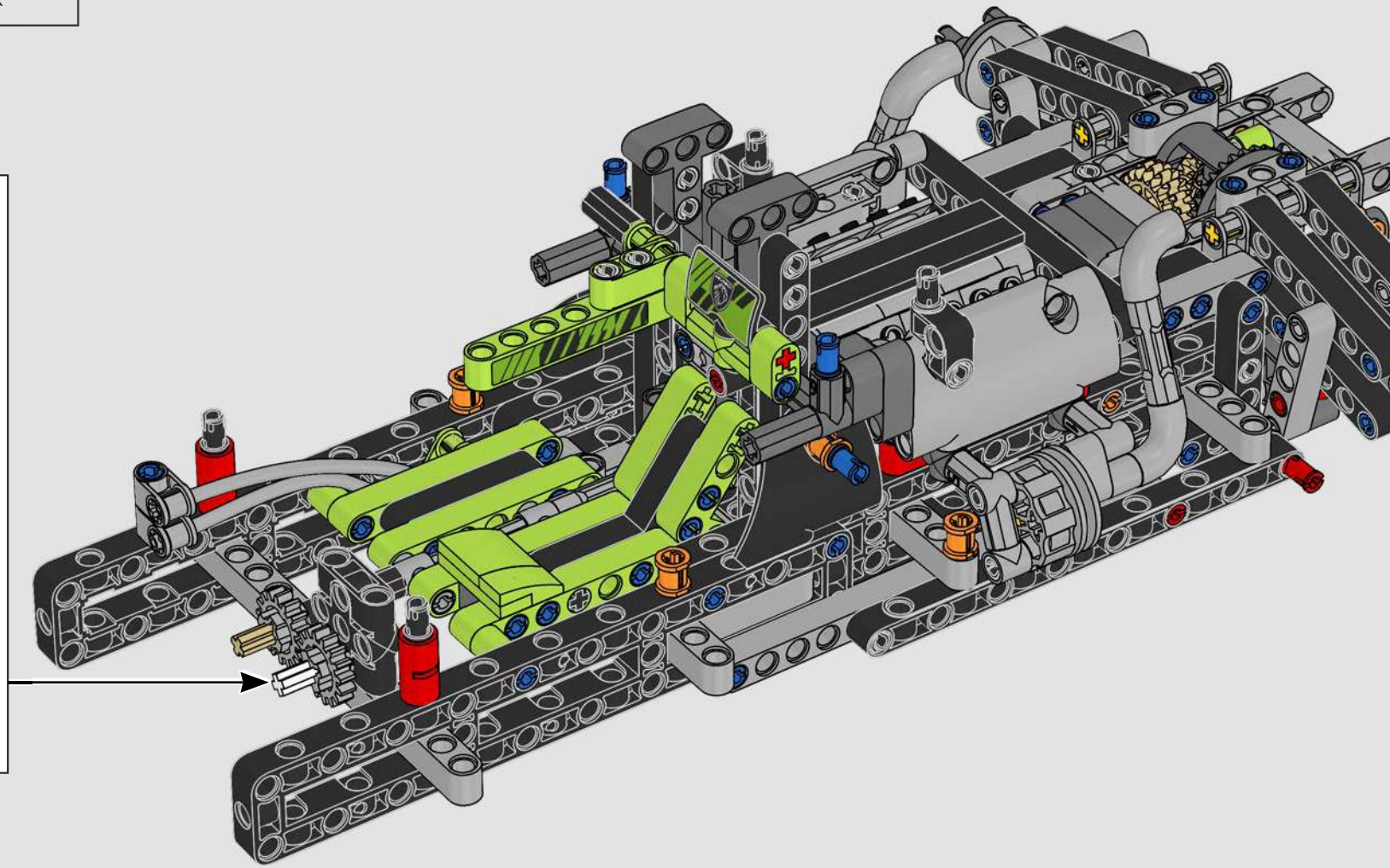

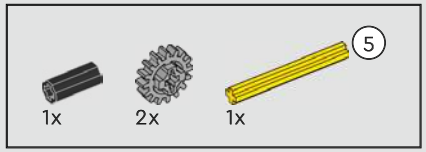

145

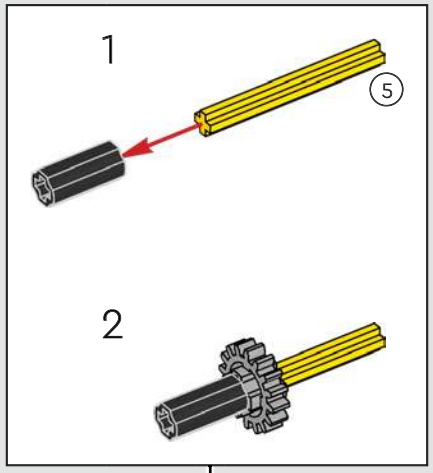

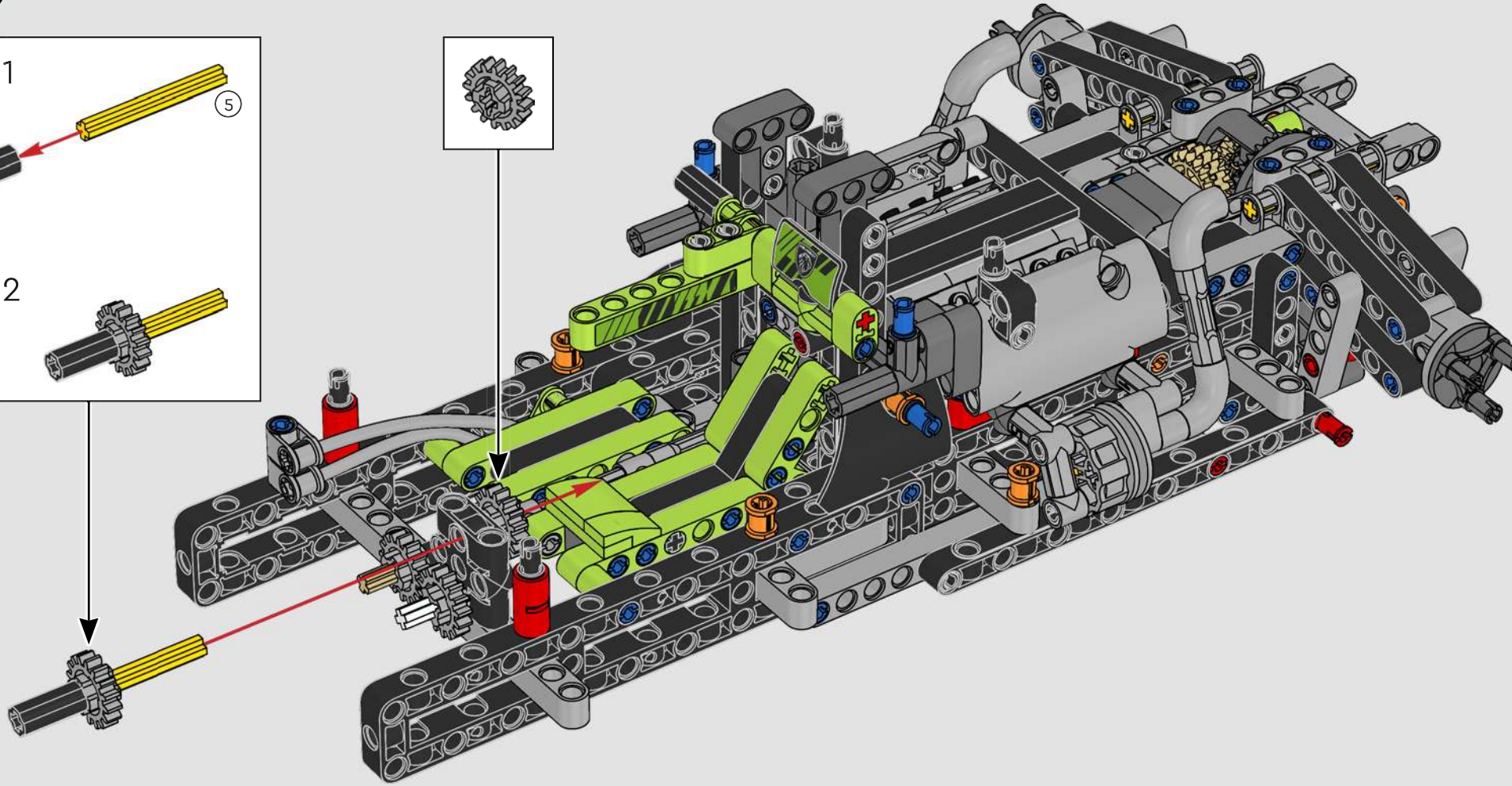

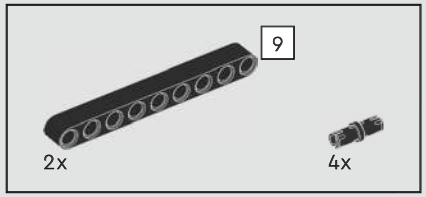

146

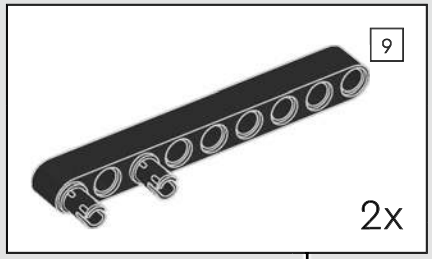

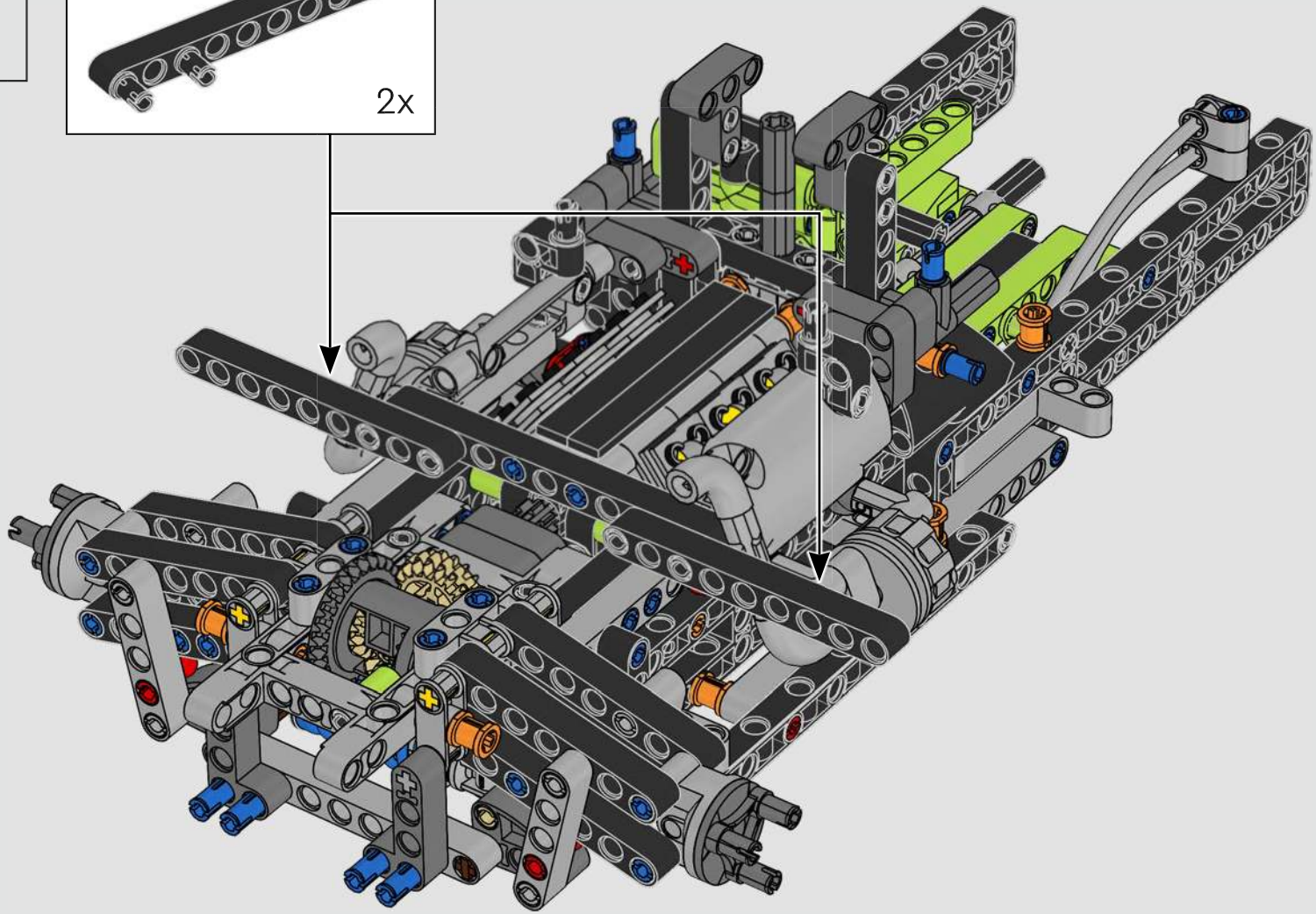

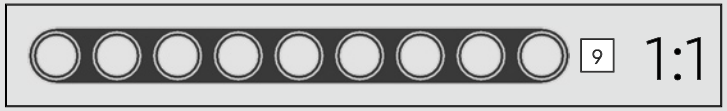

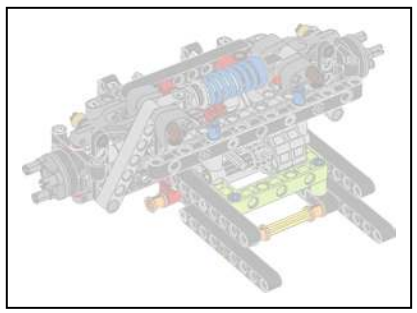

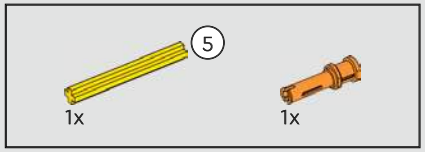

147

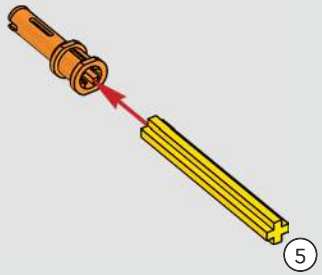

148

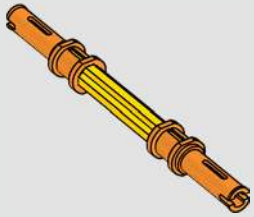

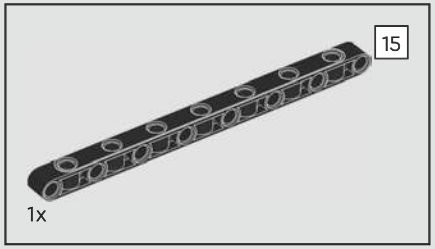

149

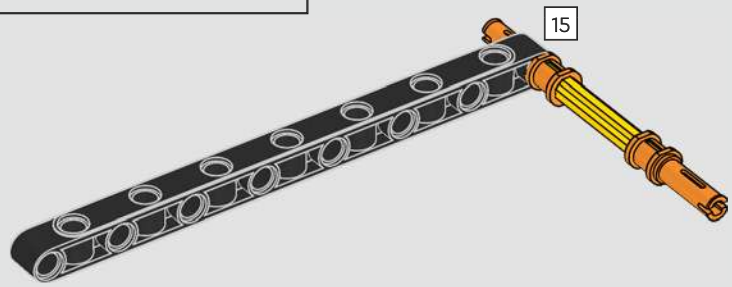

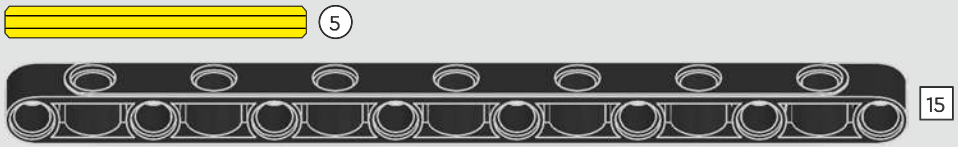

1:1

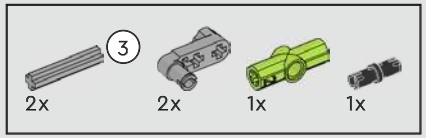

150

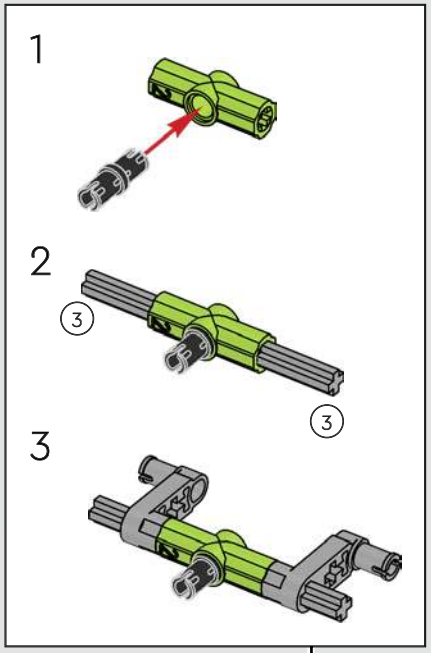

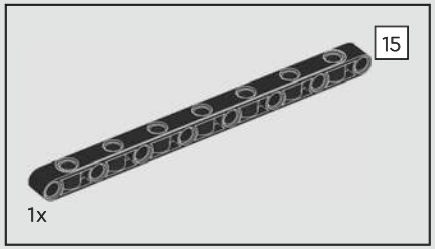

151

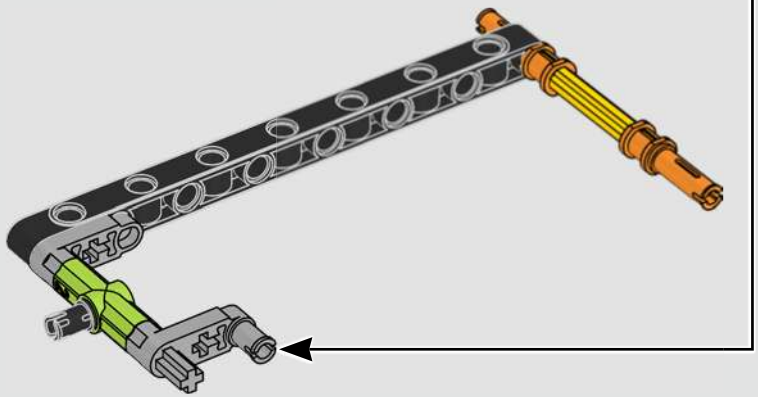

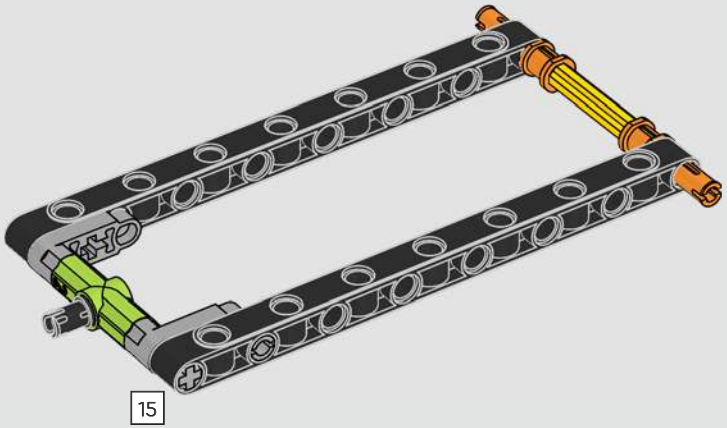

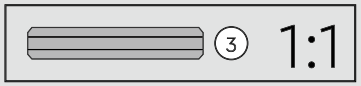

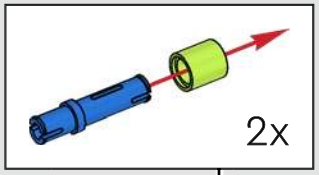

152

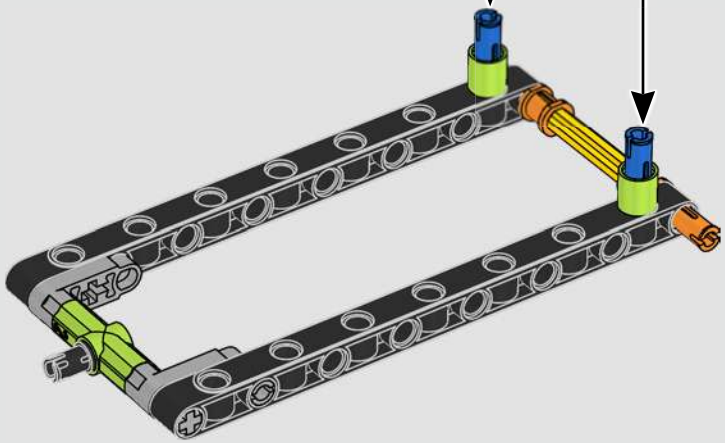

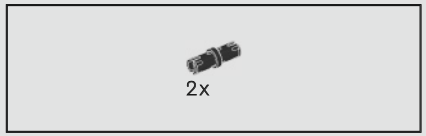

153

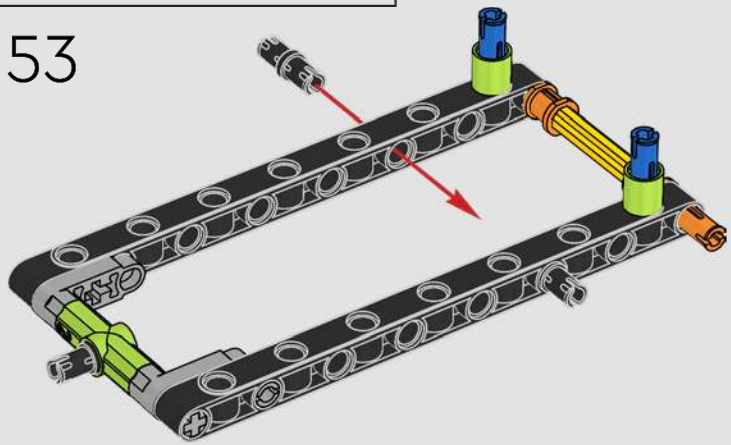

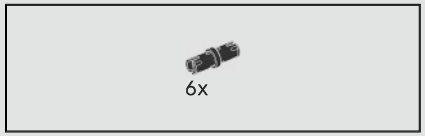

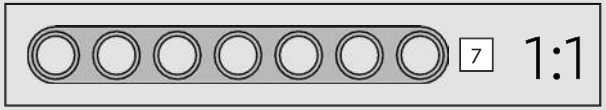

154

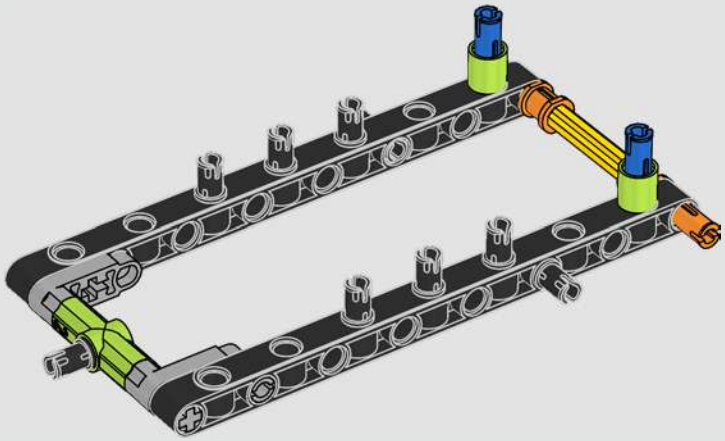

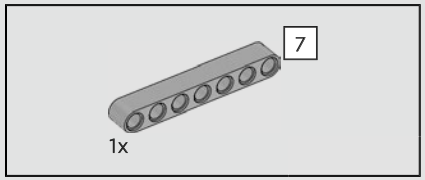

155

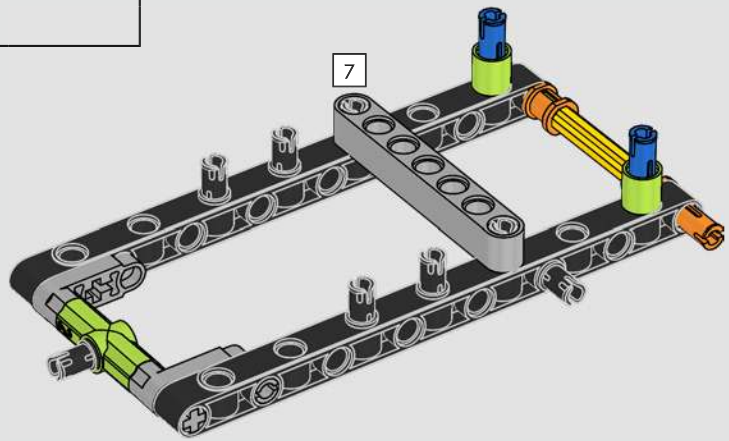

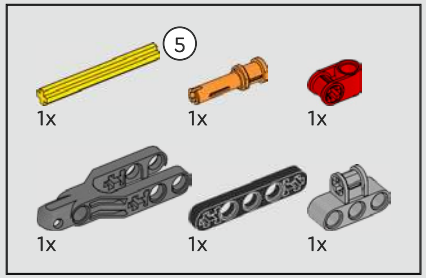

156

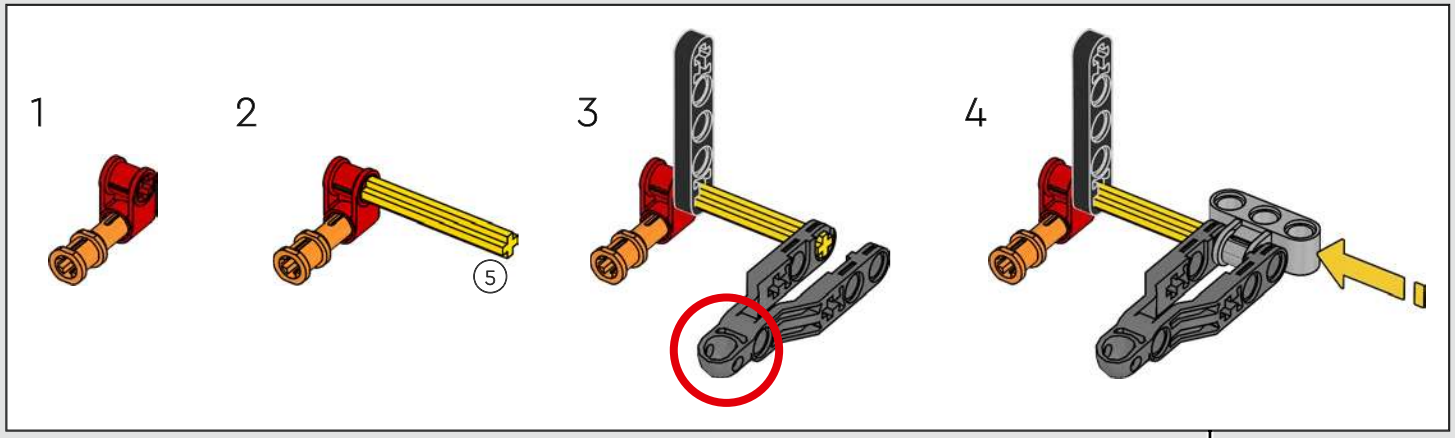

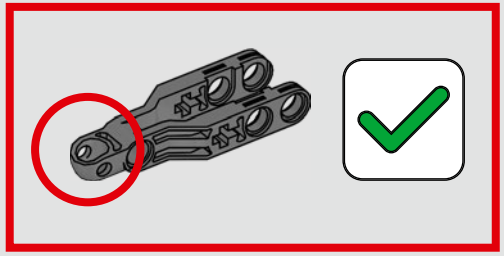

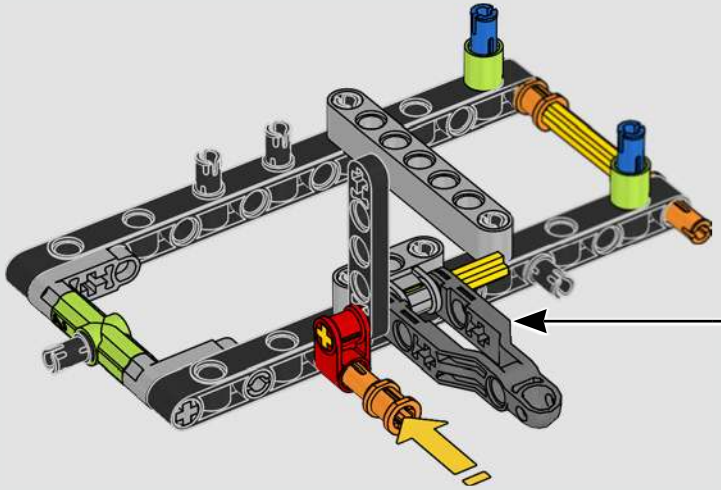

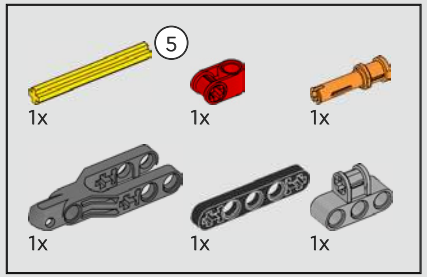

157

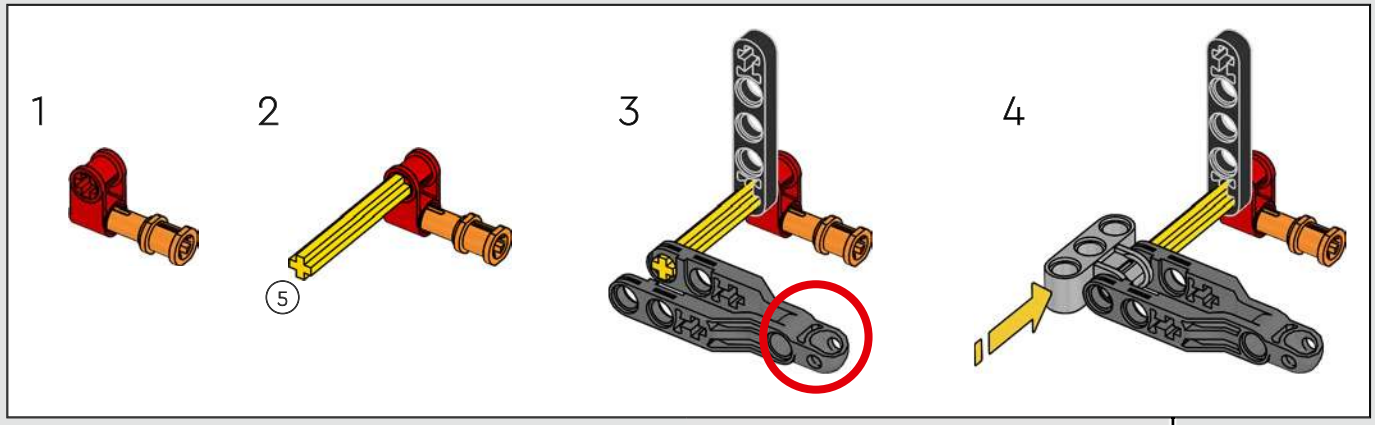

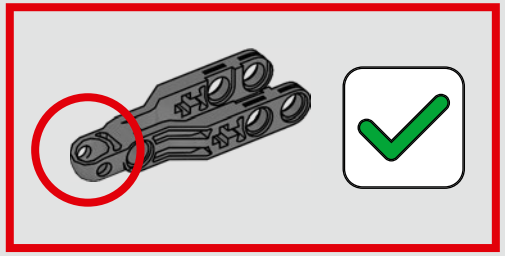

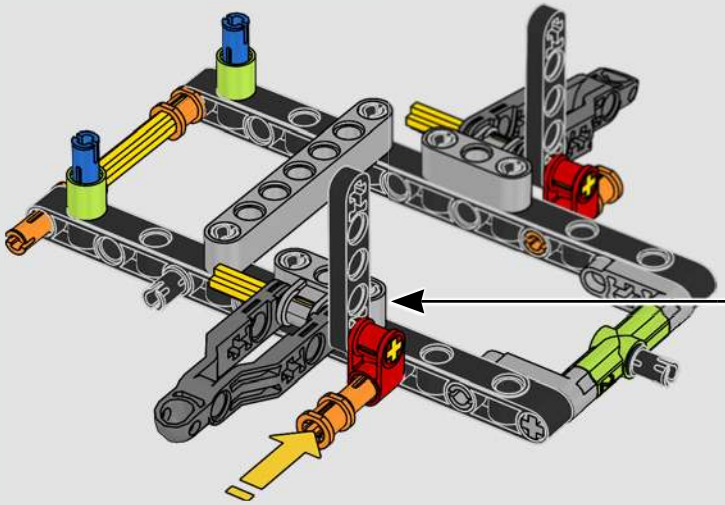

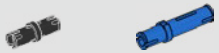

158

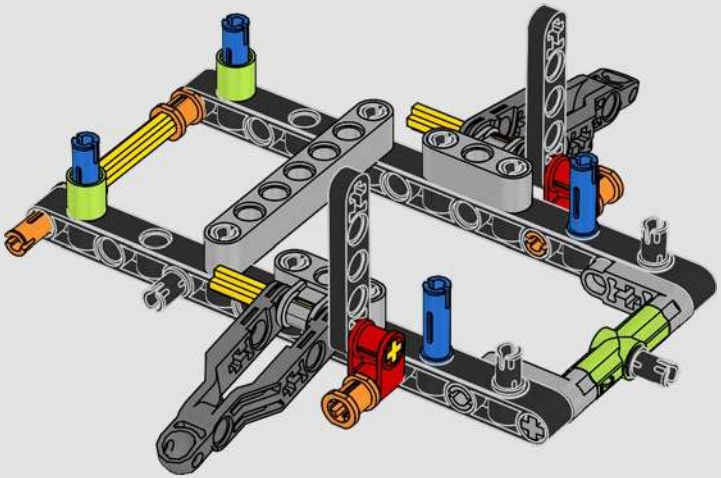

159

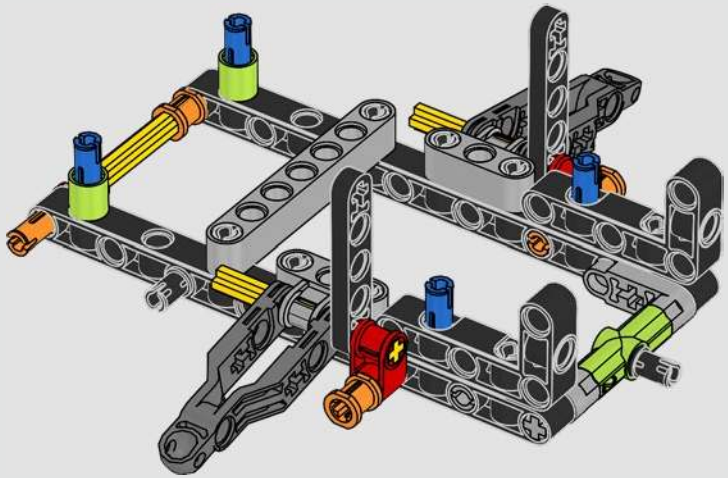

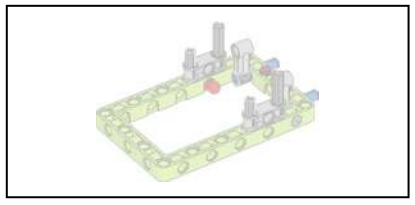

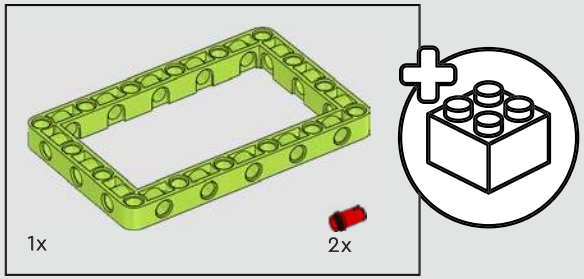

160

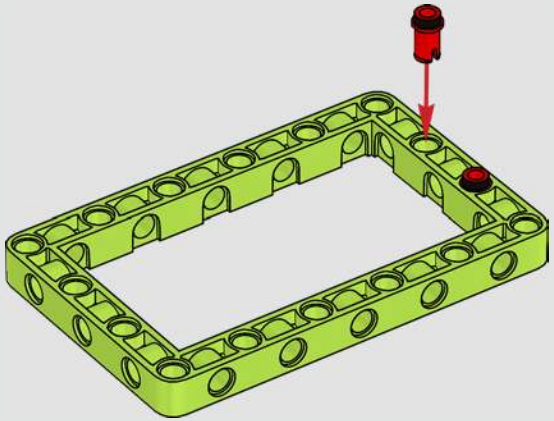

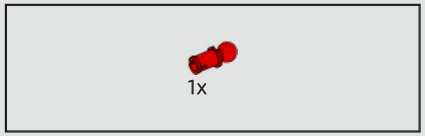

161

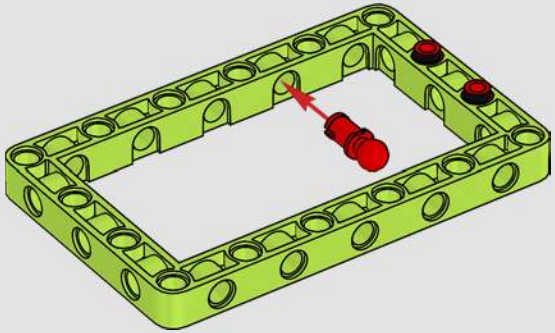

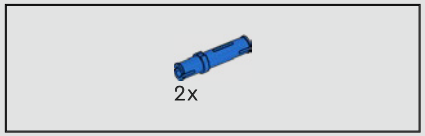

162

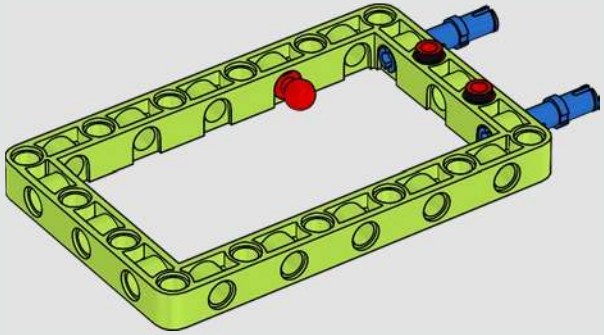

163

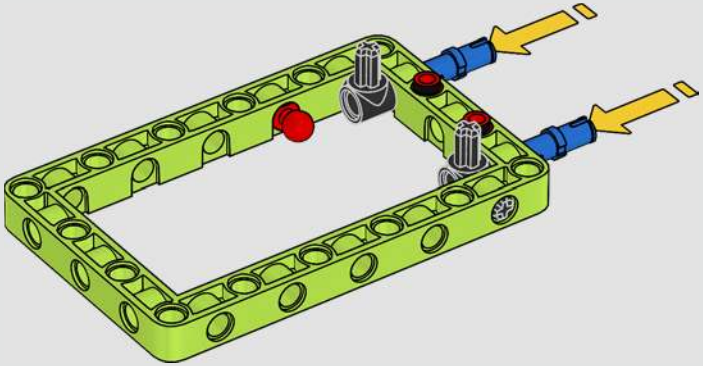

164

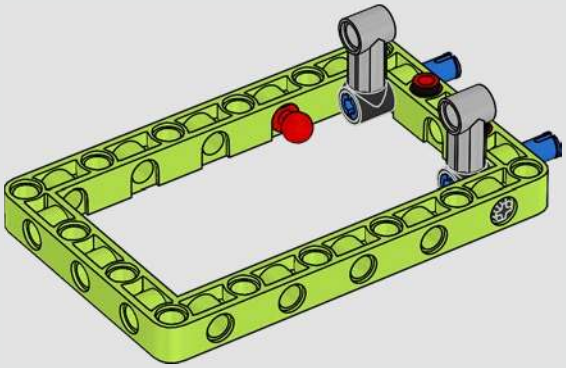

165

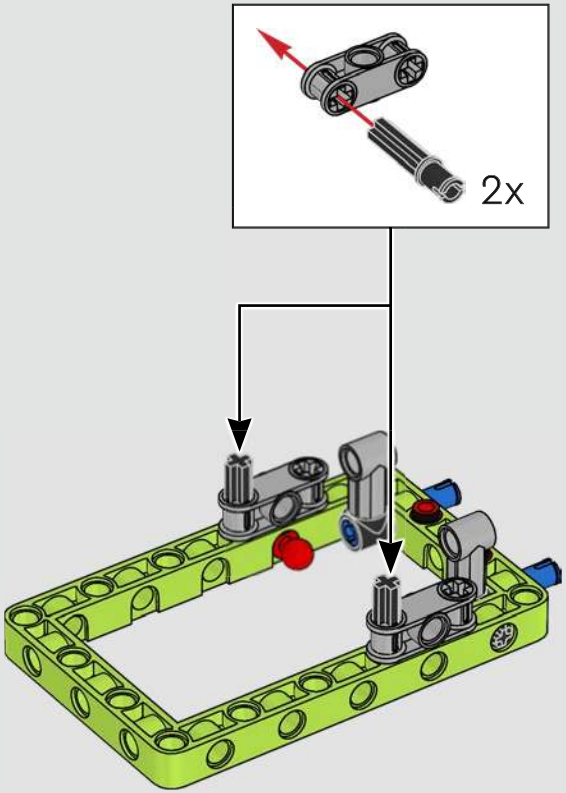

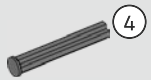

166

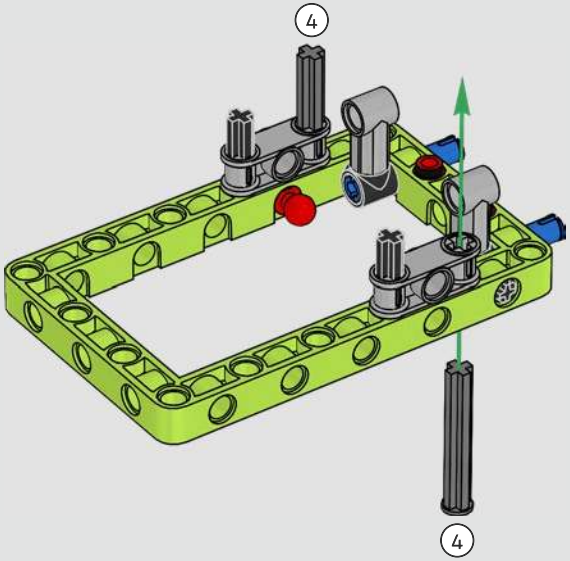

167

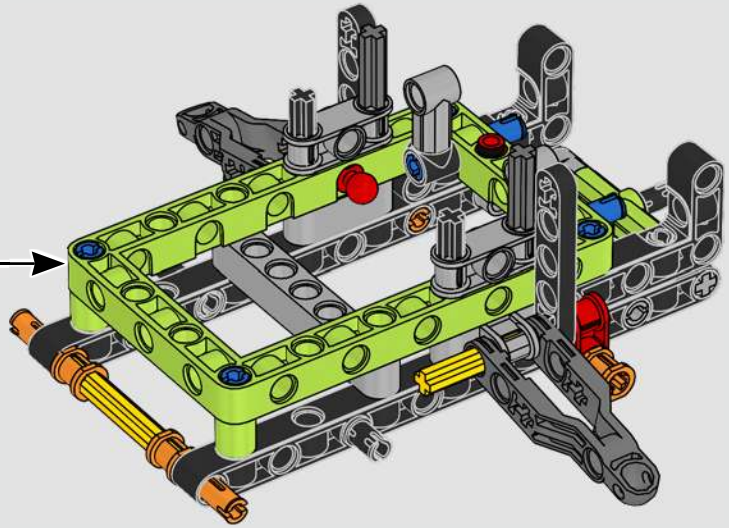

1:1

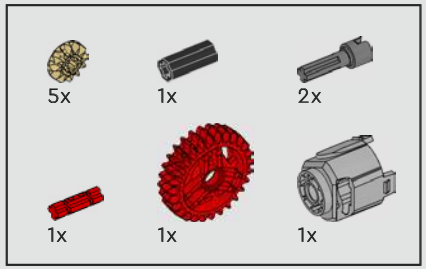

168

1

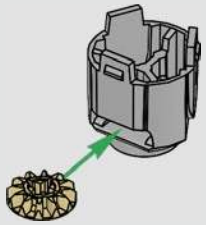

2

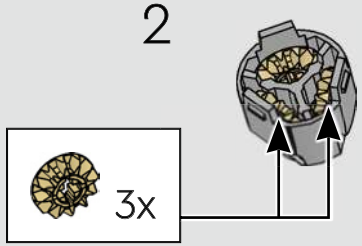

3

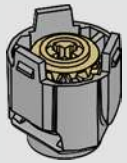

4

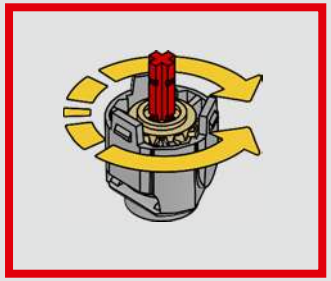

5

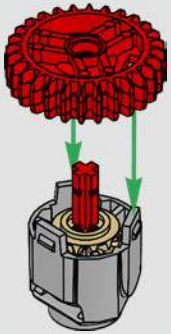

6

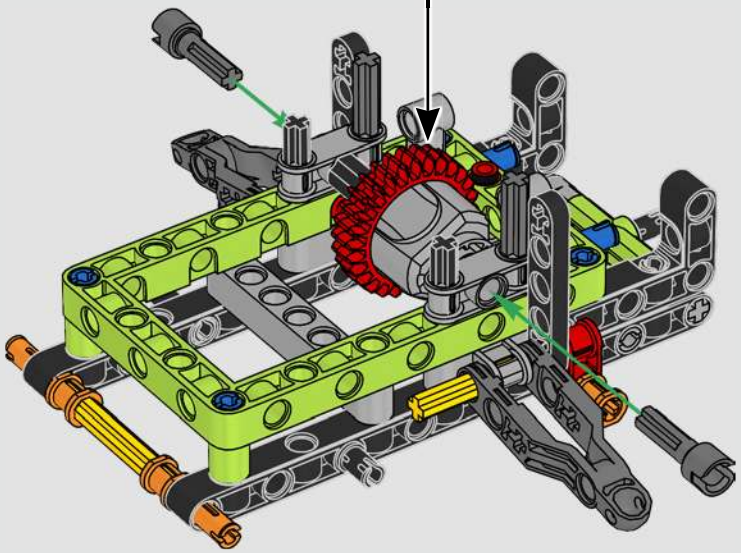

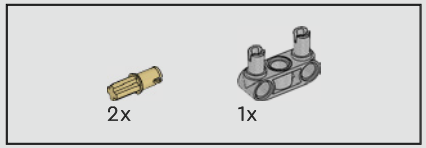

169

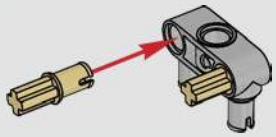

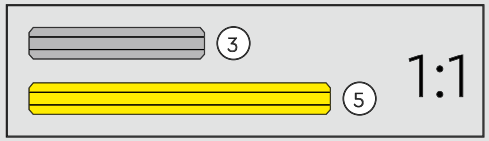

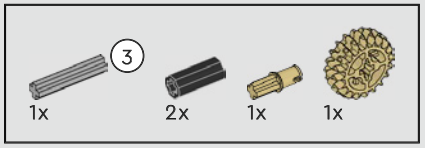

170

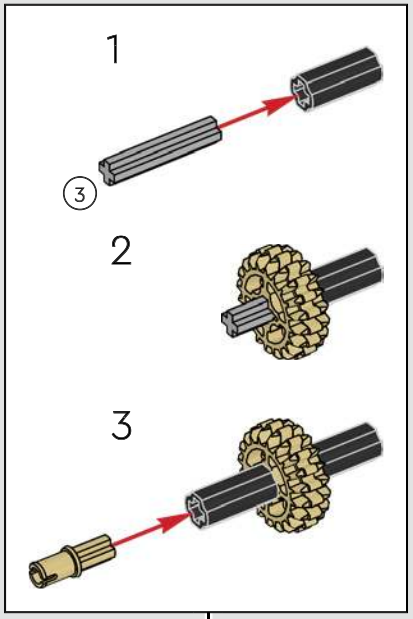

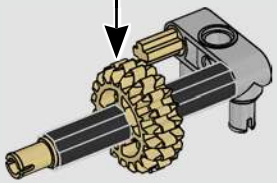

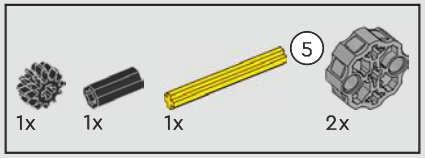

171

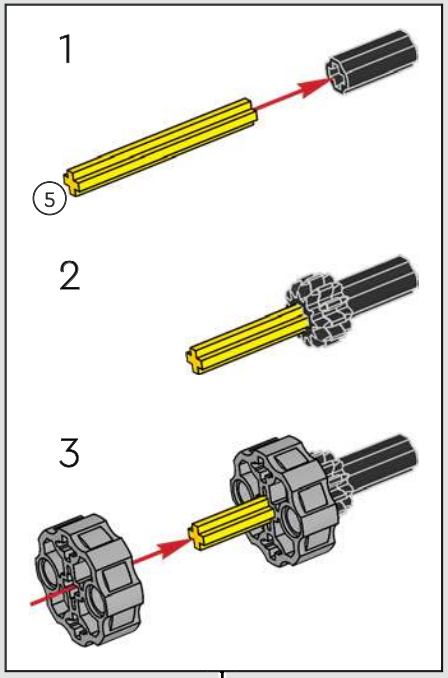

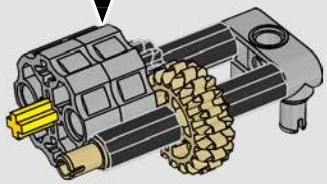

172

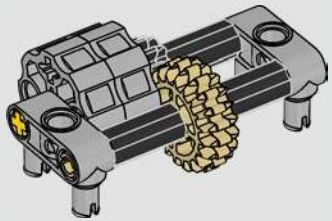

173

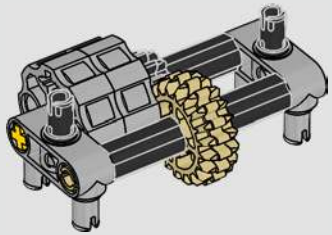

174

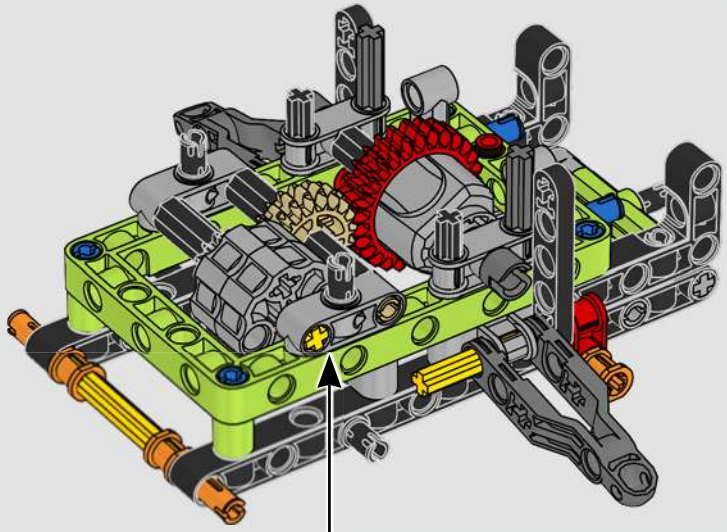

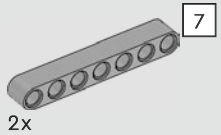

175

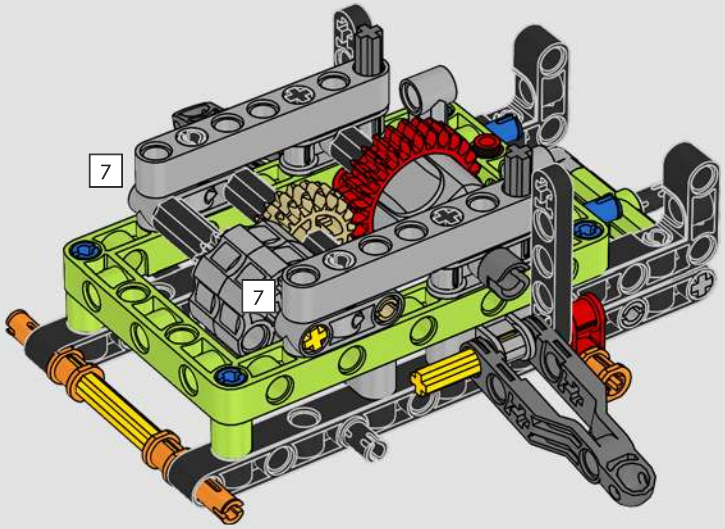

1:1

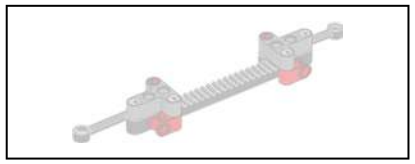

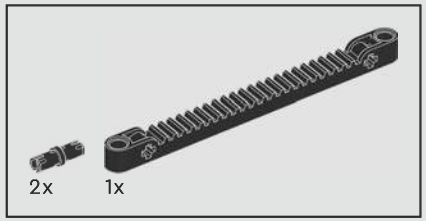

176

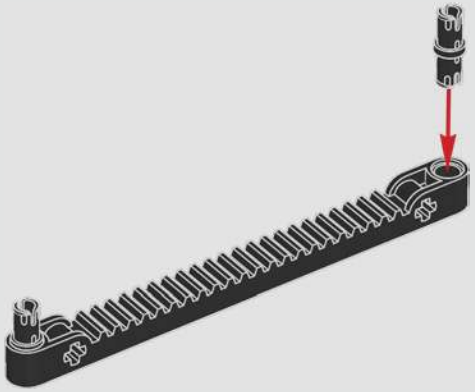

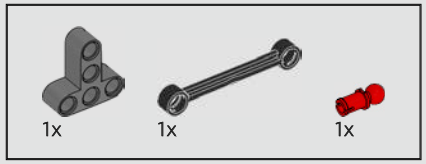

177

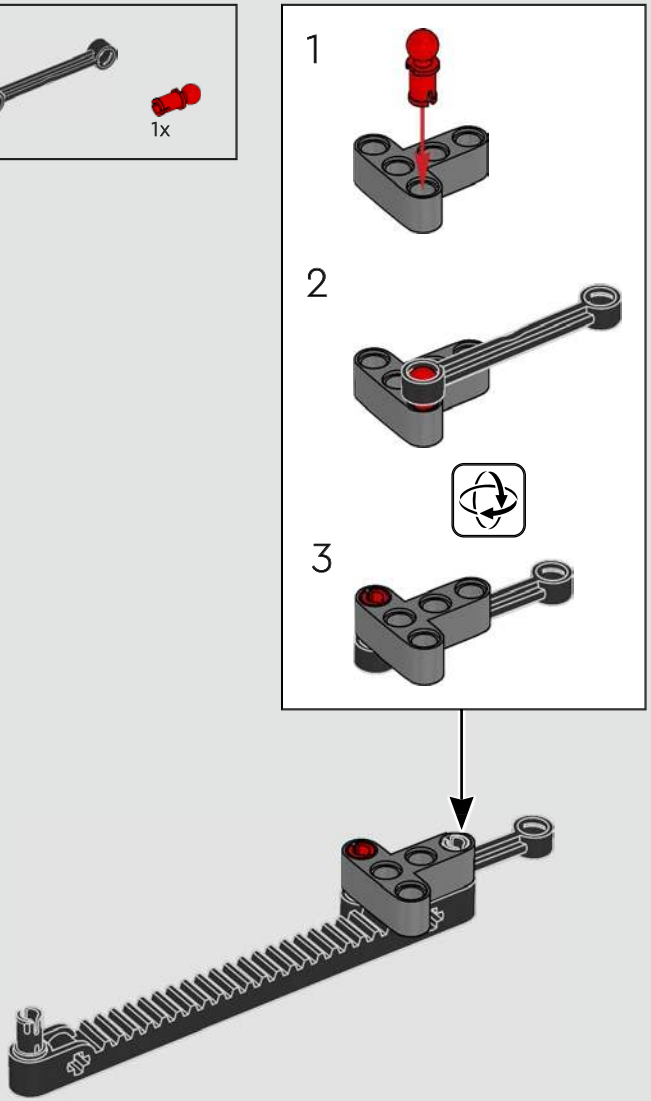

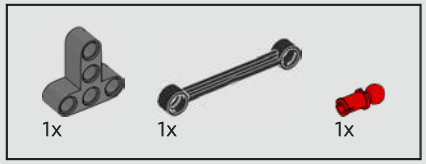

178

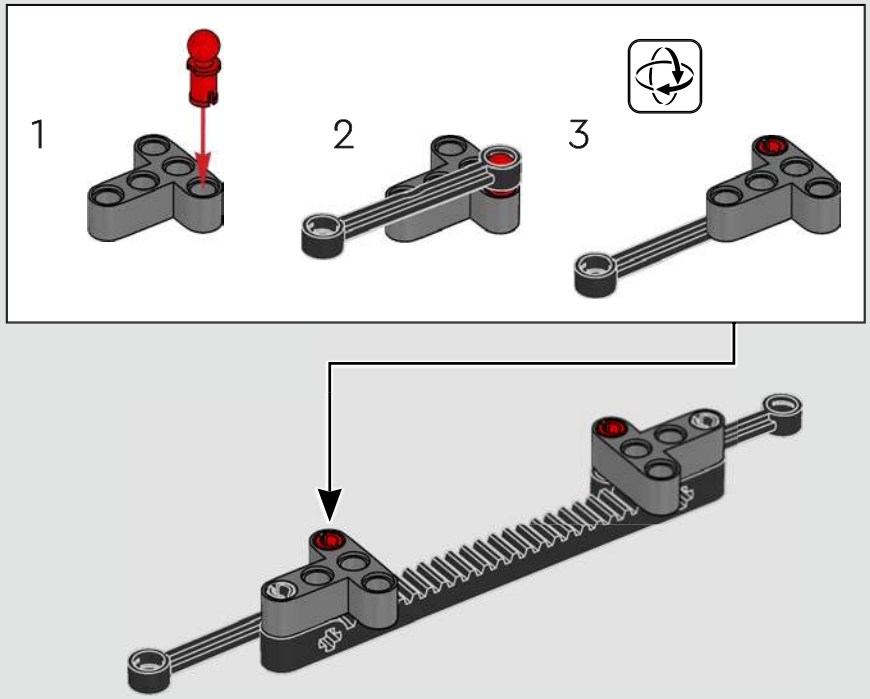

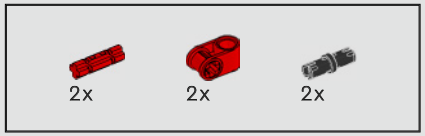

179

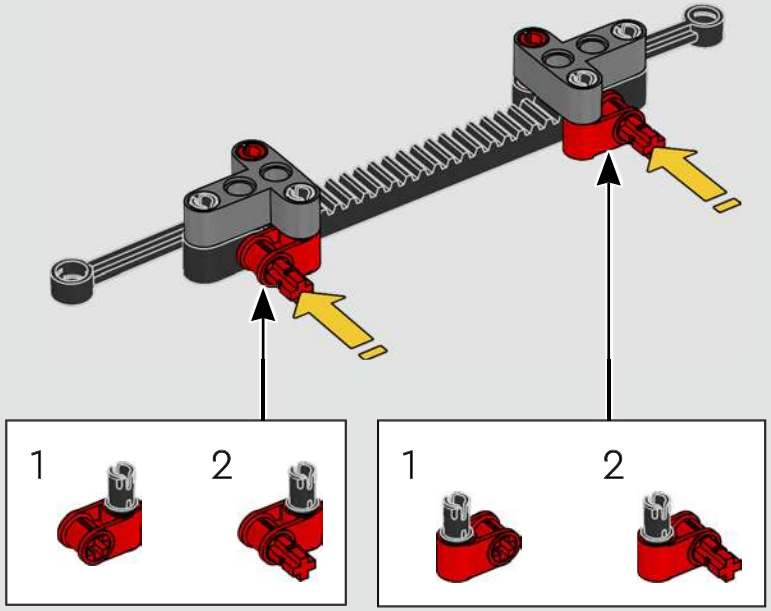

180

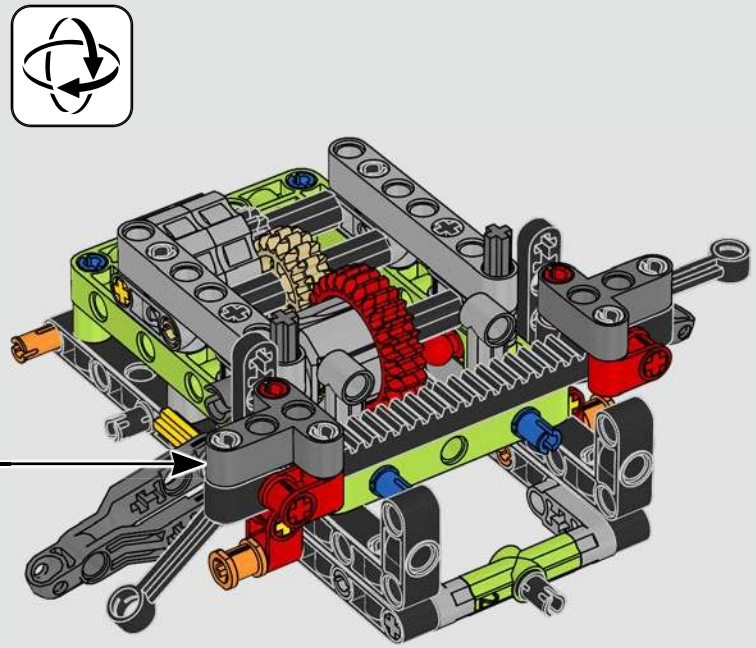

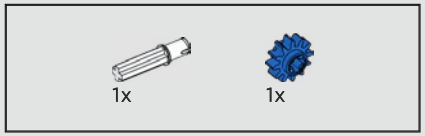

181

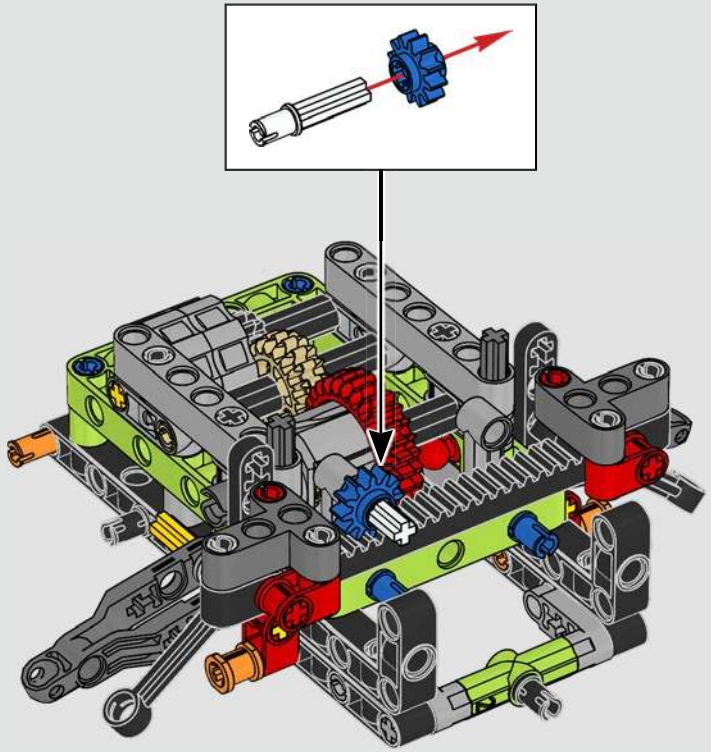

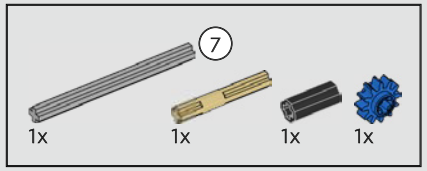

182

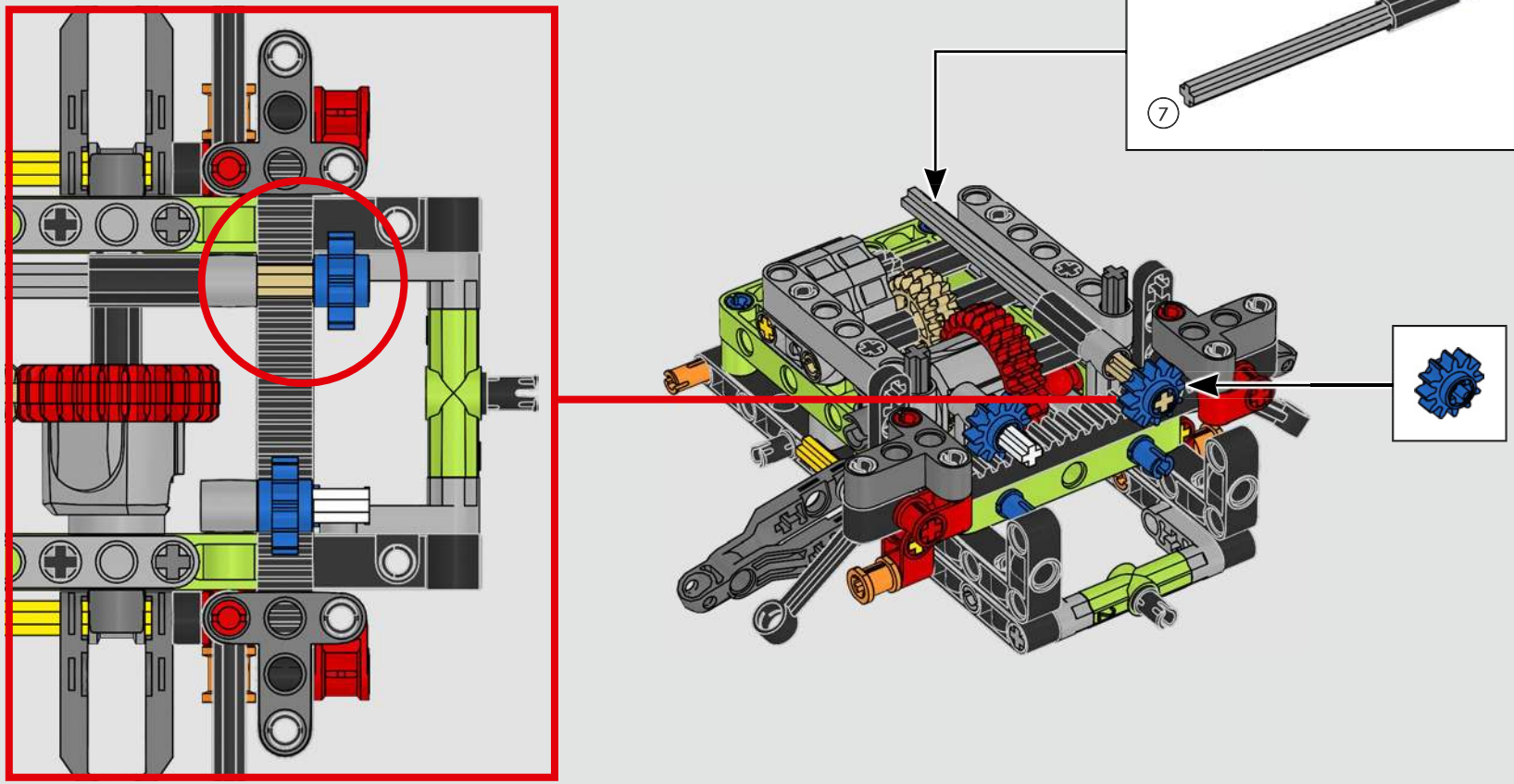

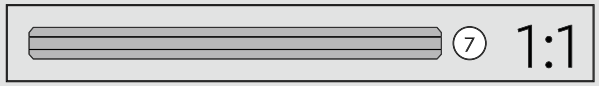

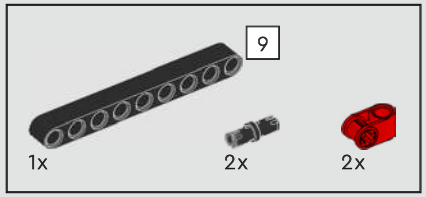

183

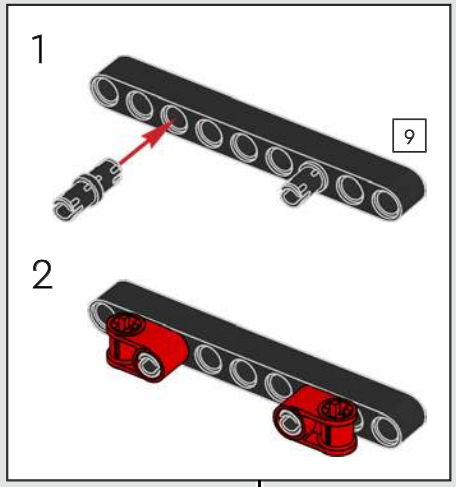

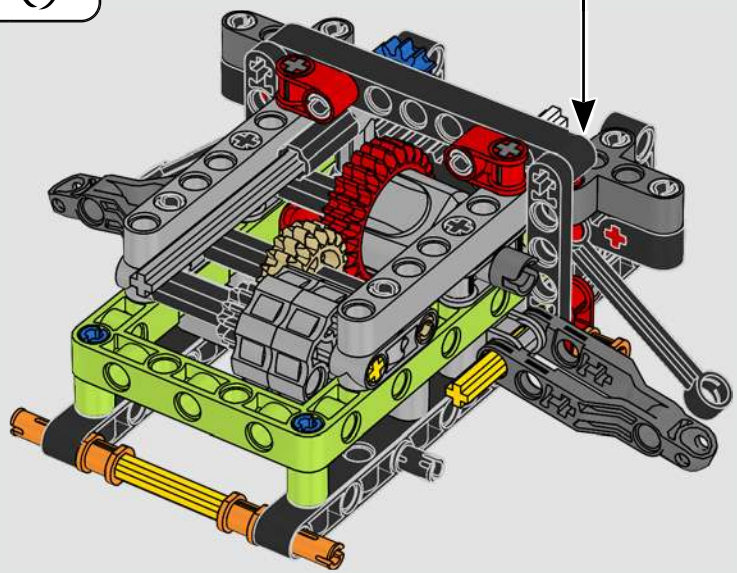

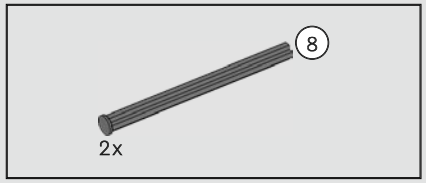

184

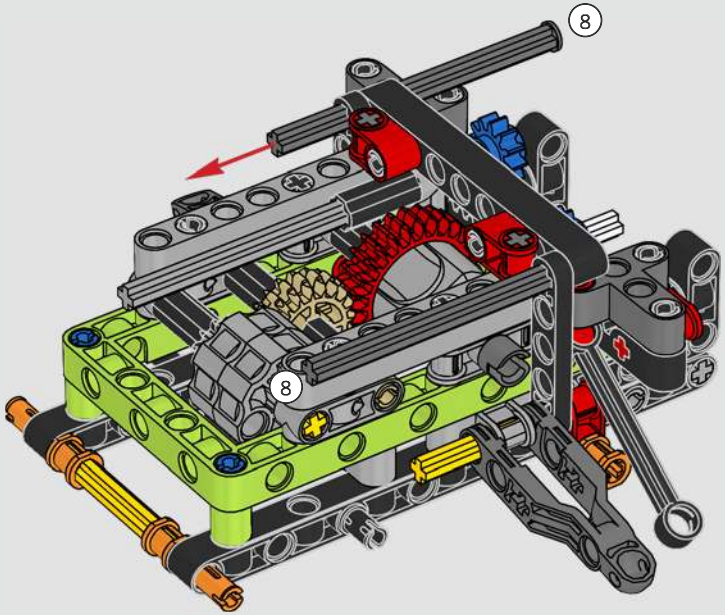

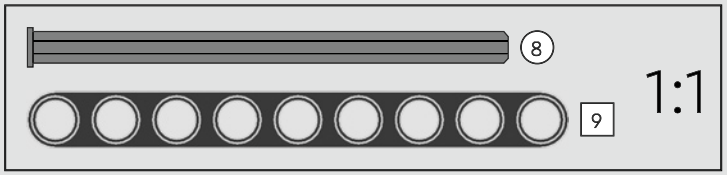

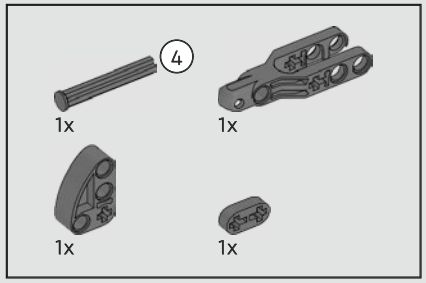

185

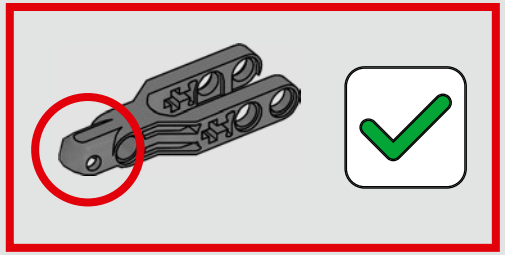

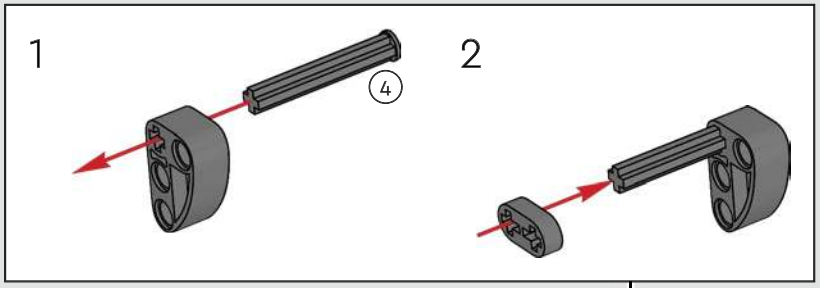

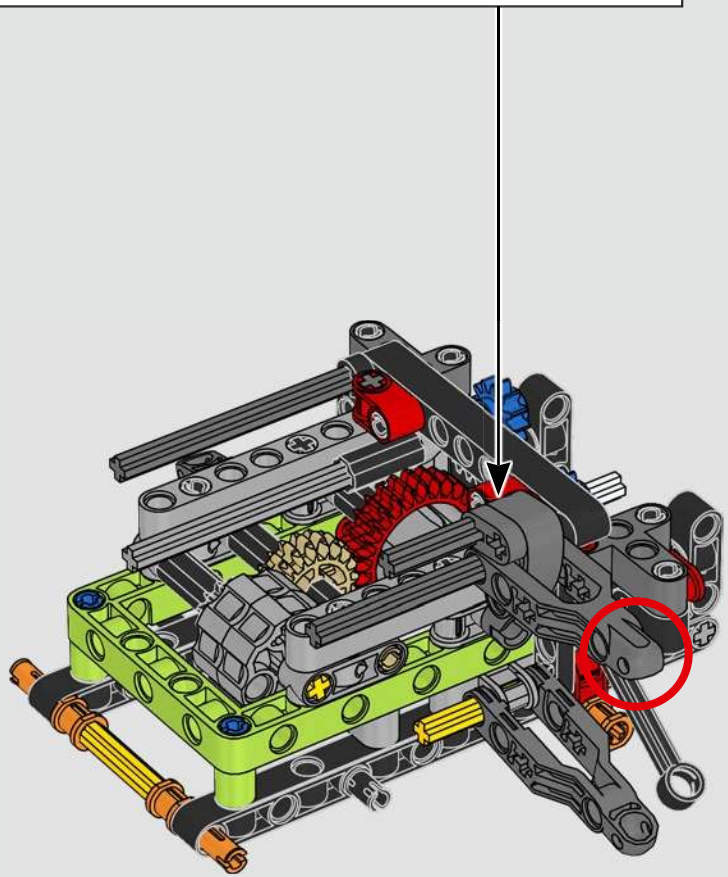

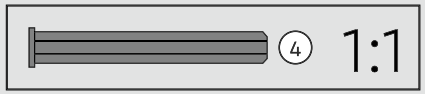

186

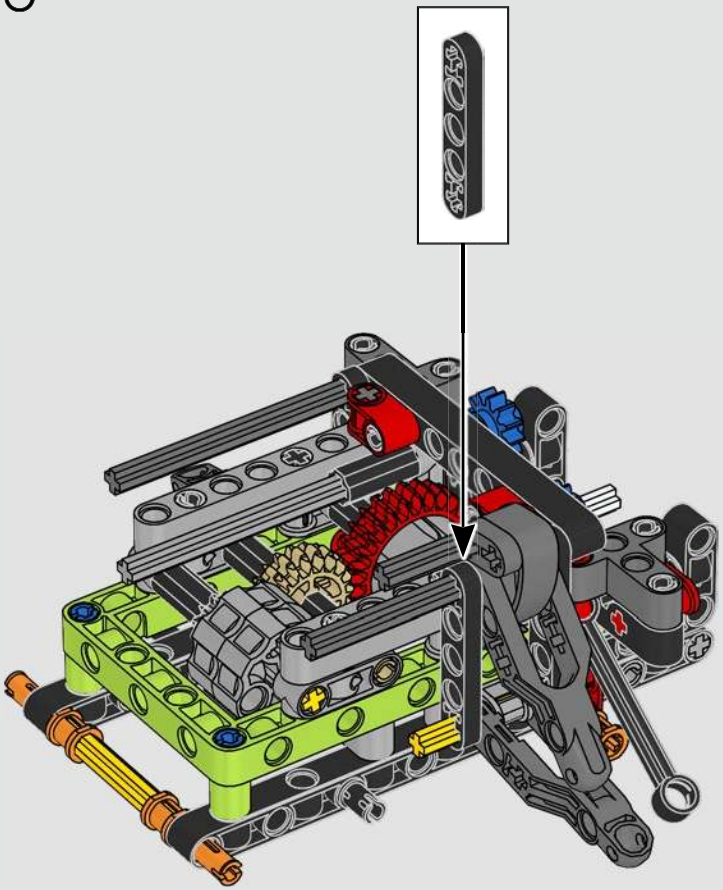

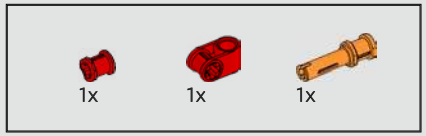

187

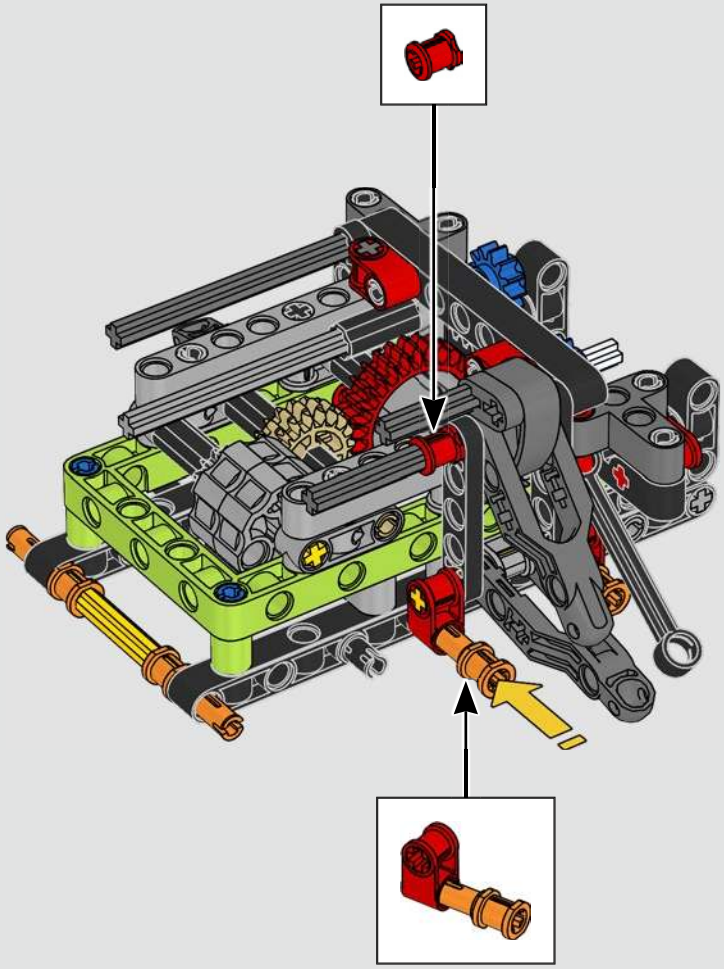

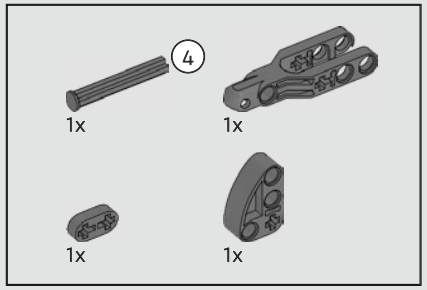

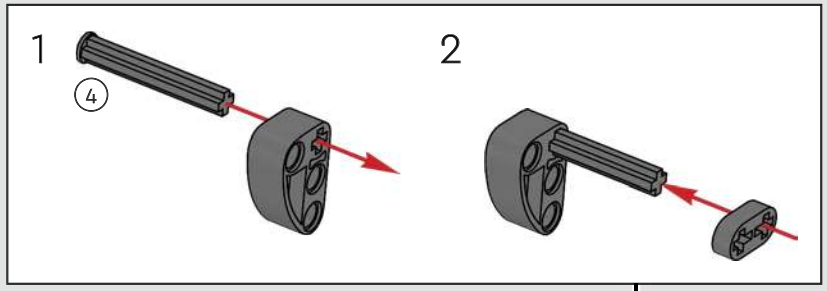

188

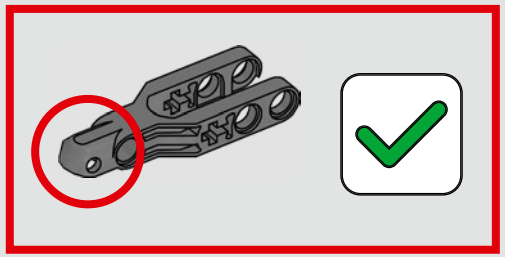

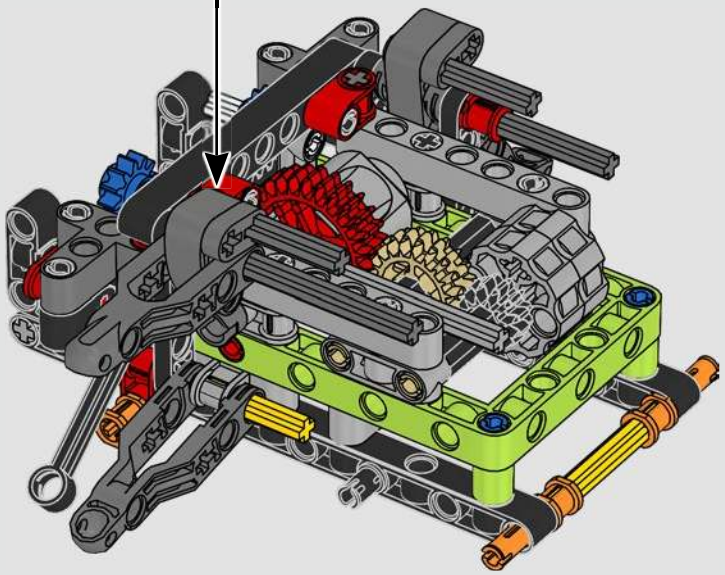

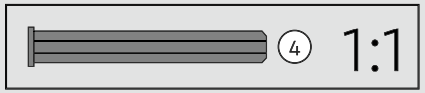

189

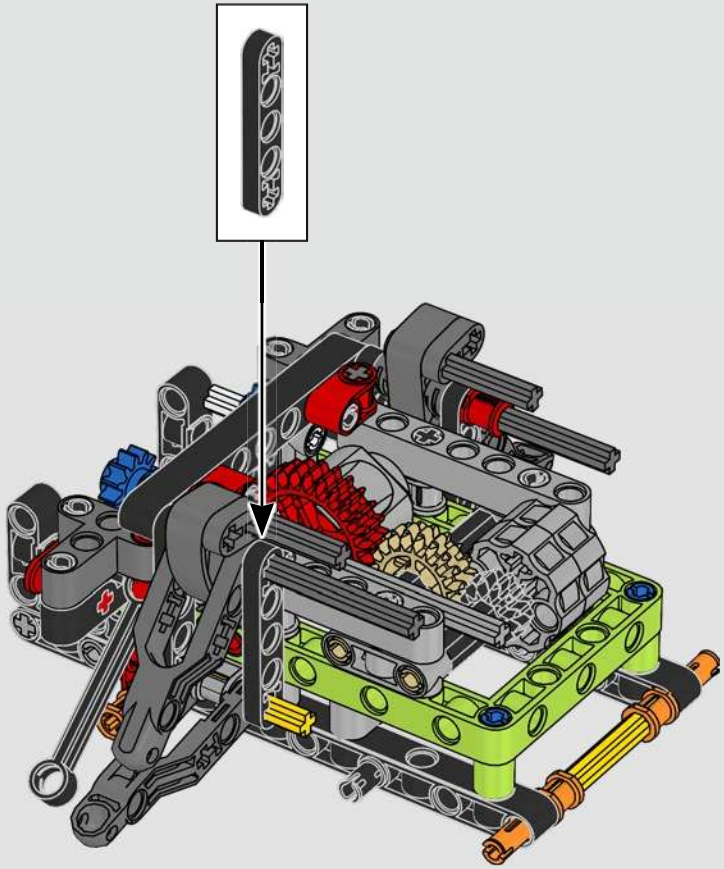

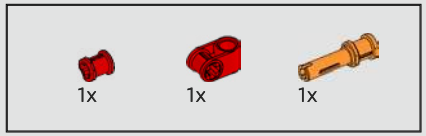

190

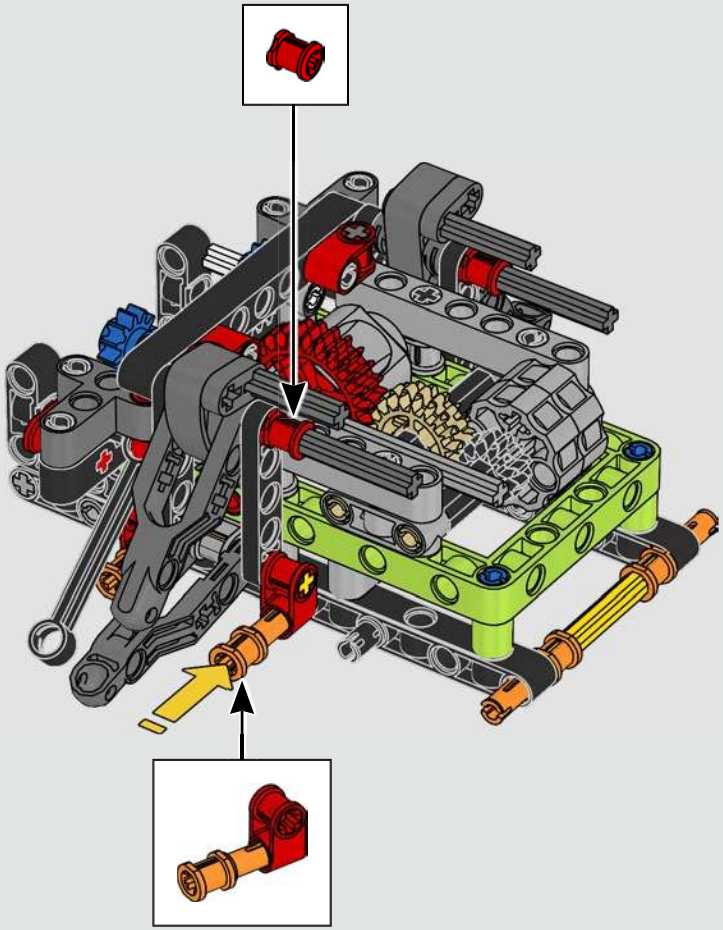

191

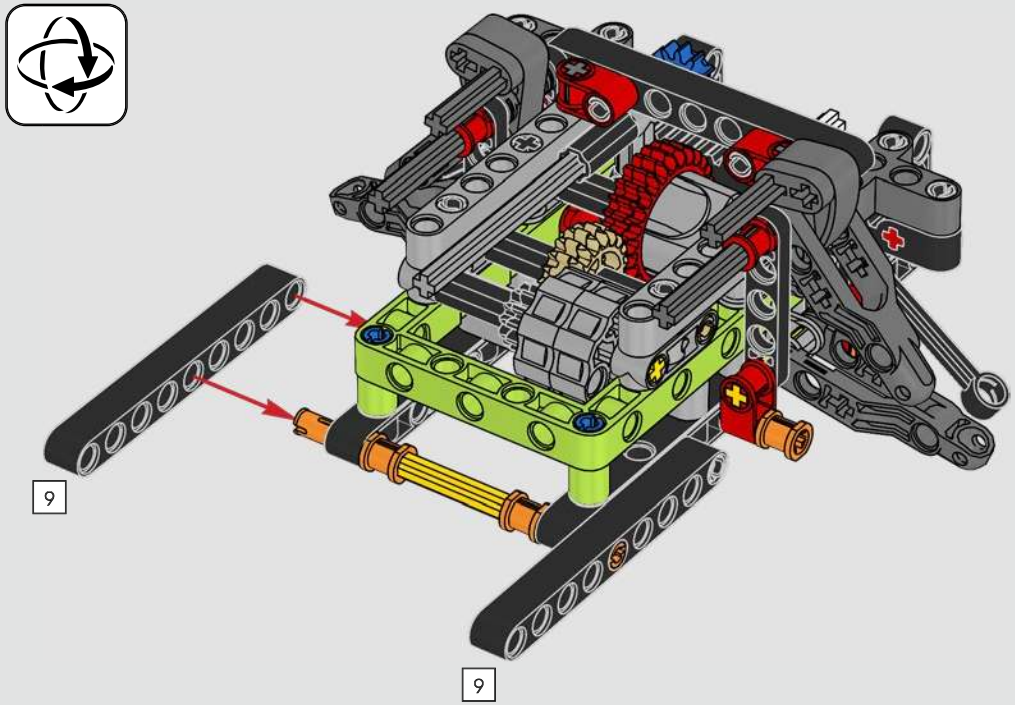

1:1

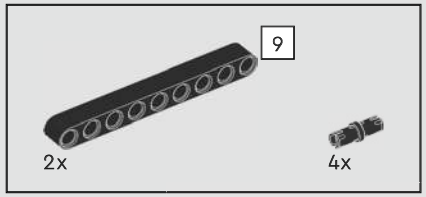

192

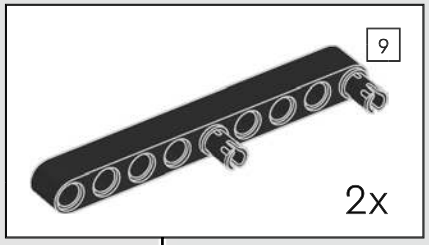

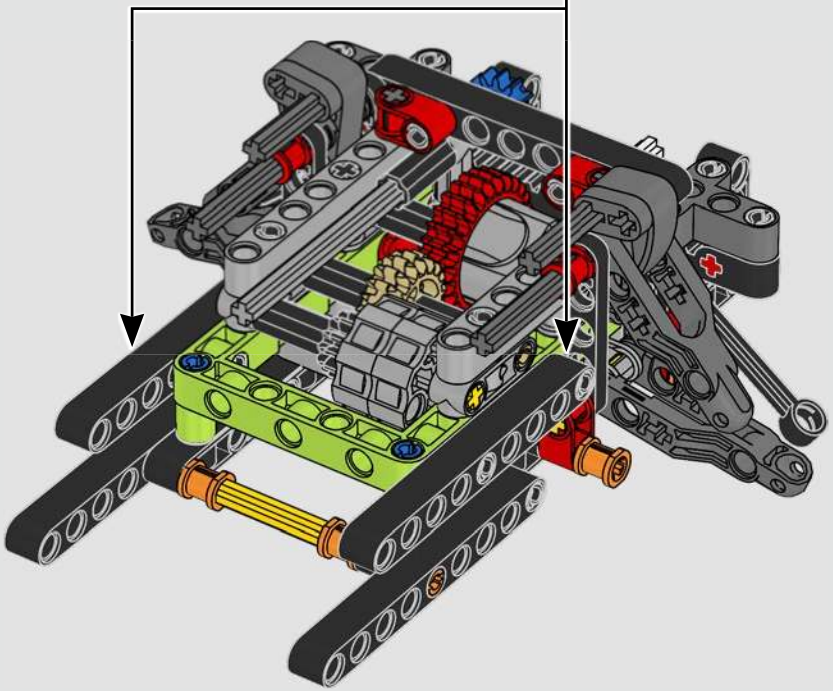

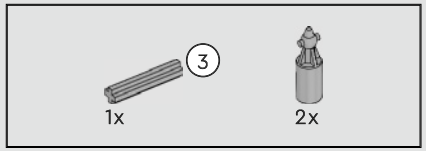

193

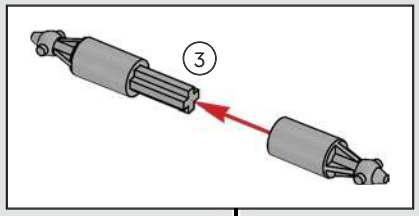

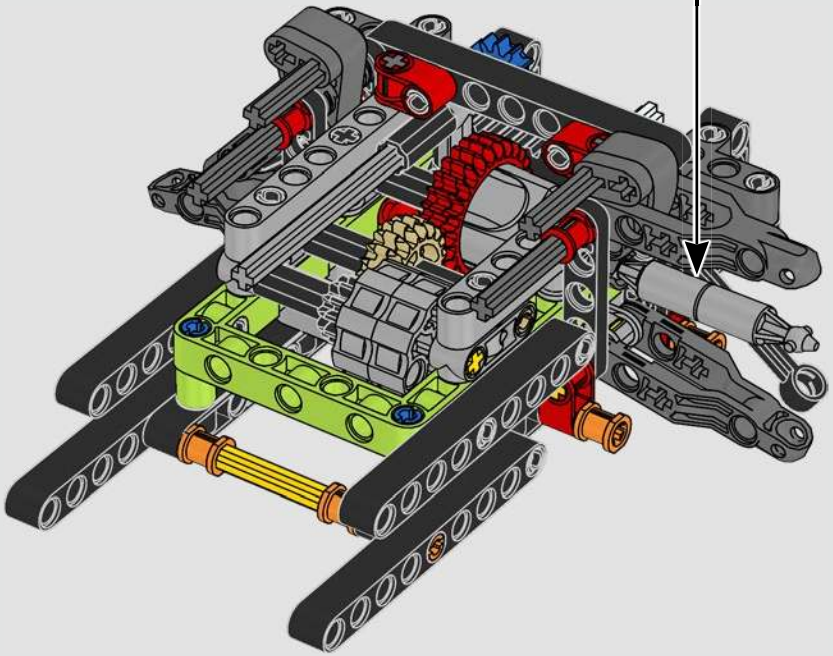

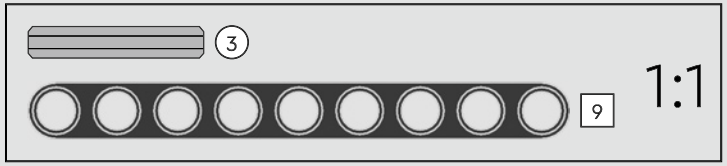

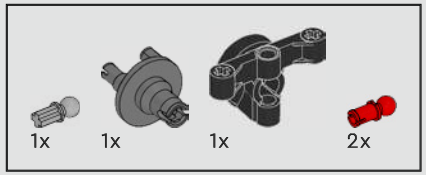

194

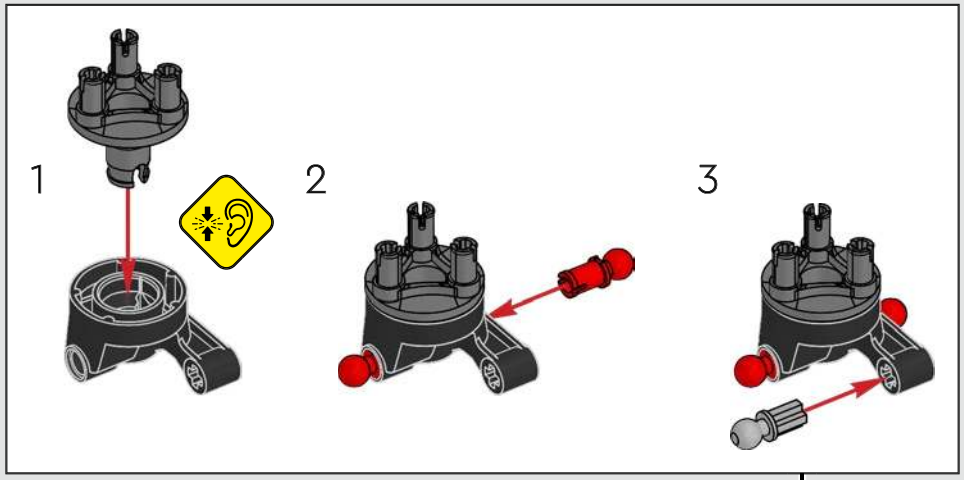

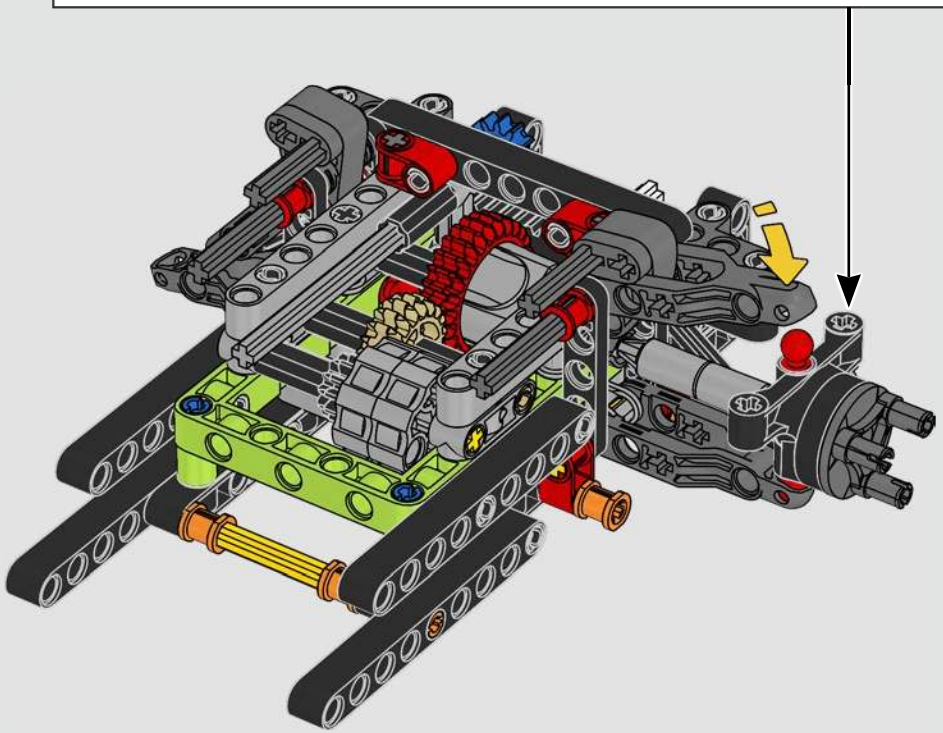

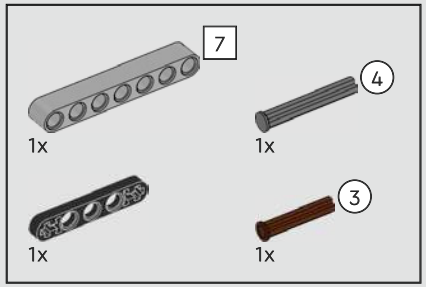

195

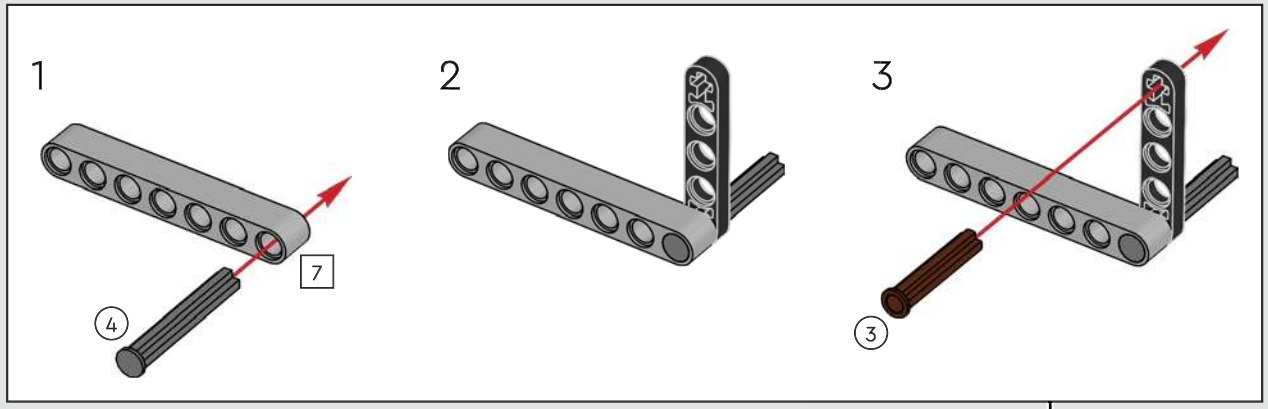

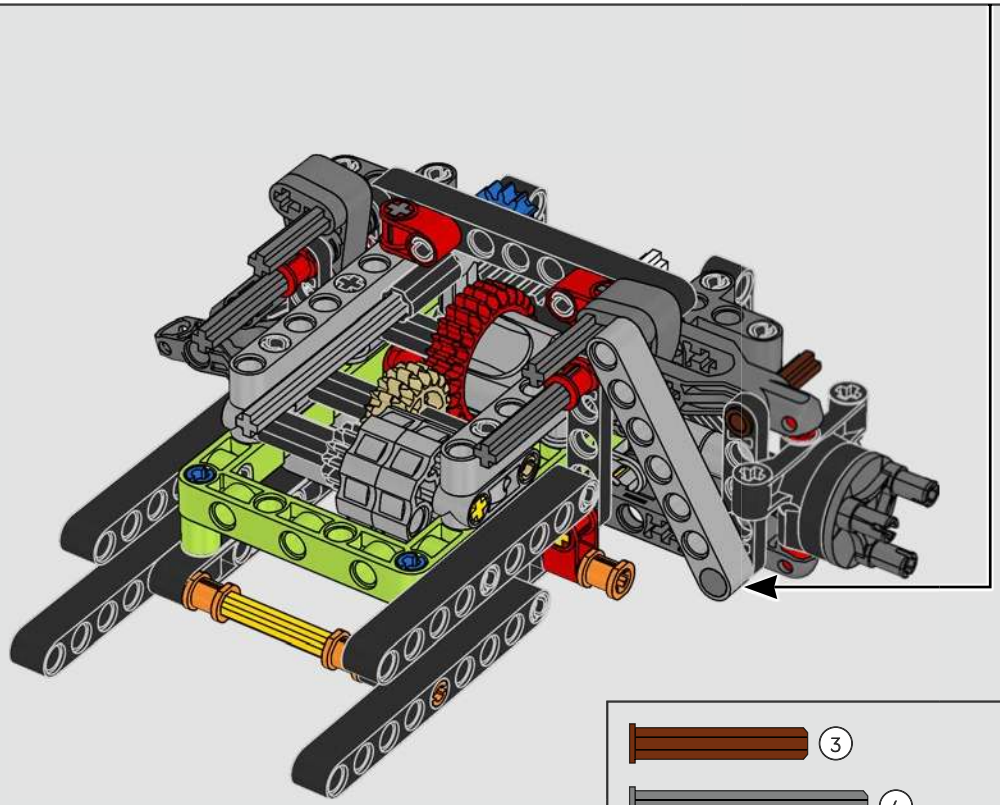

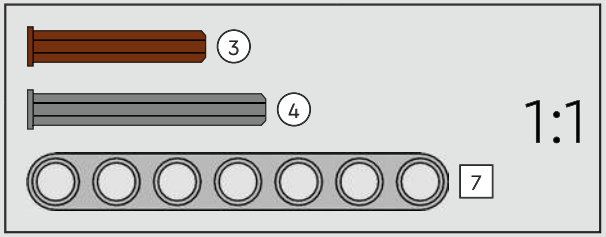

196

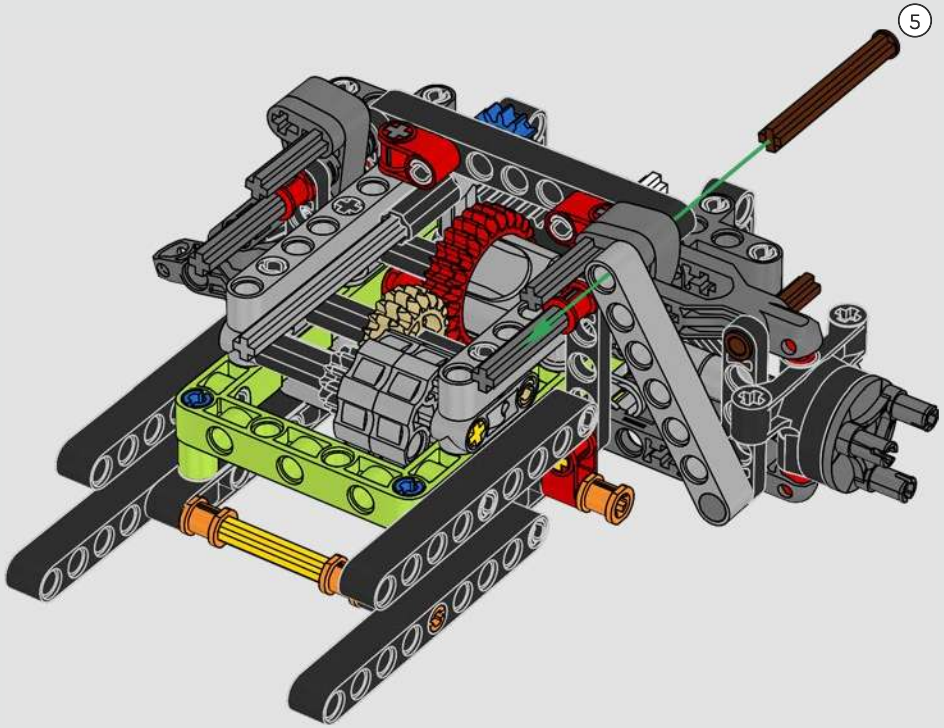

1:1

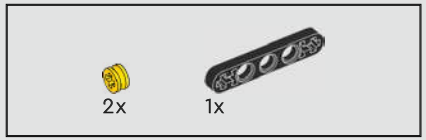

197

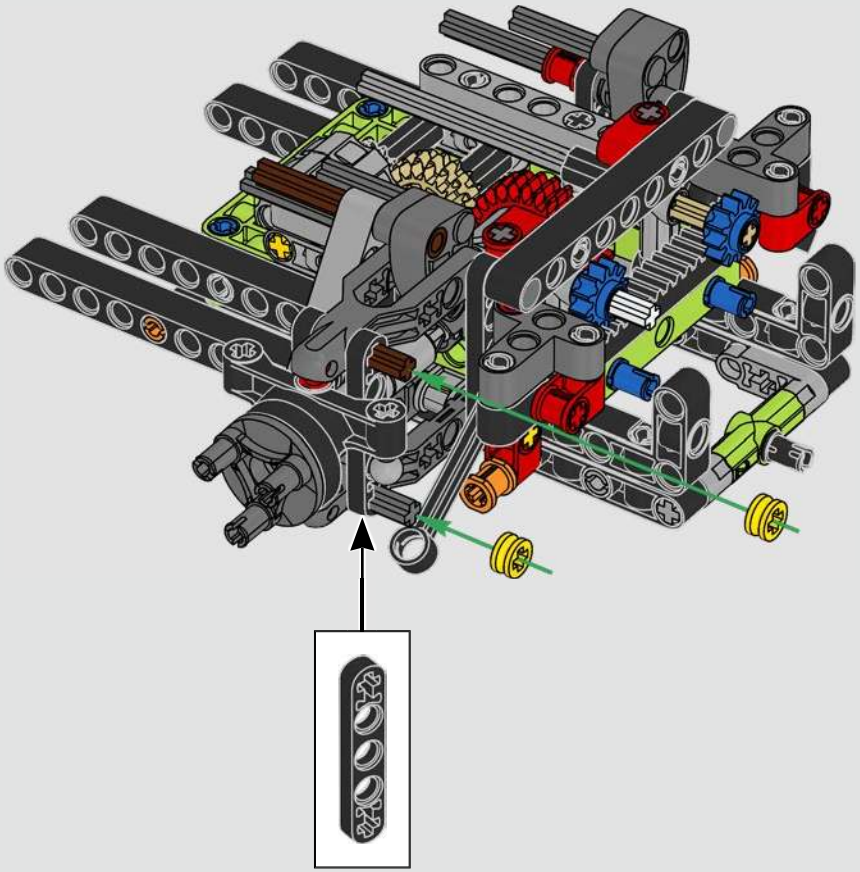

198

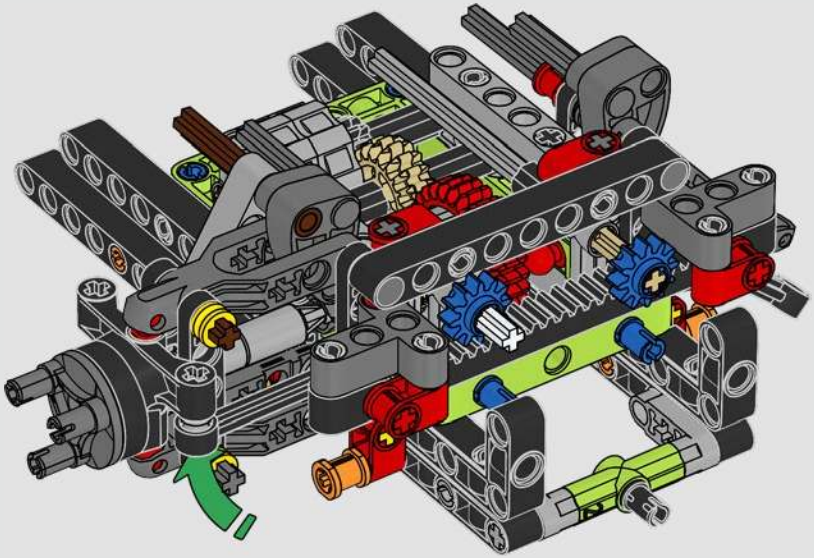

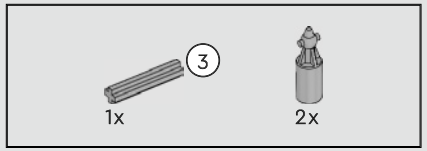

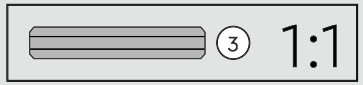

199

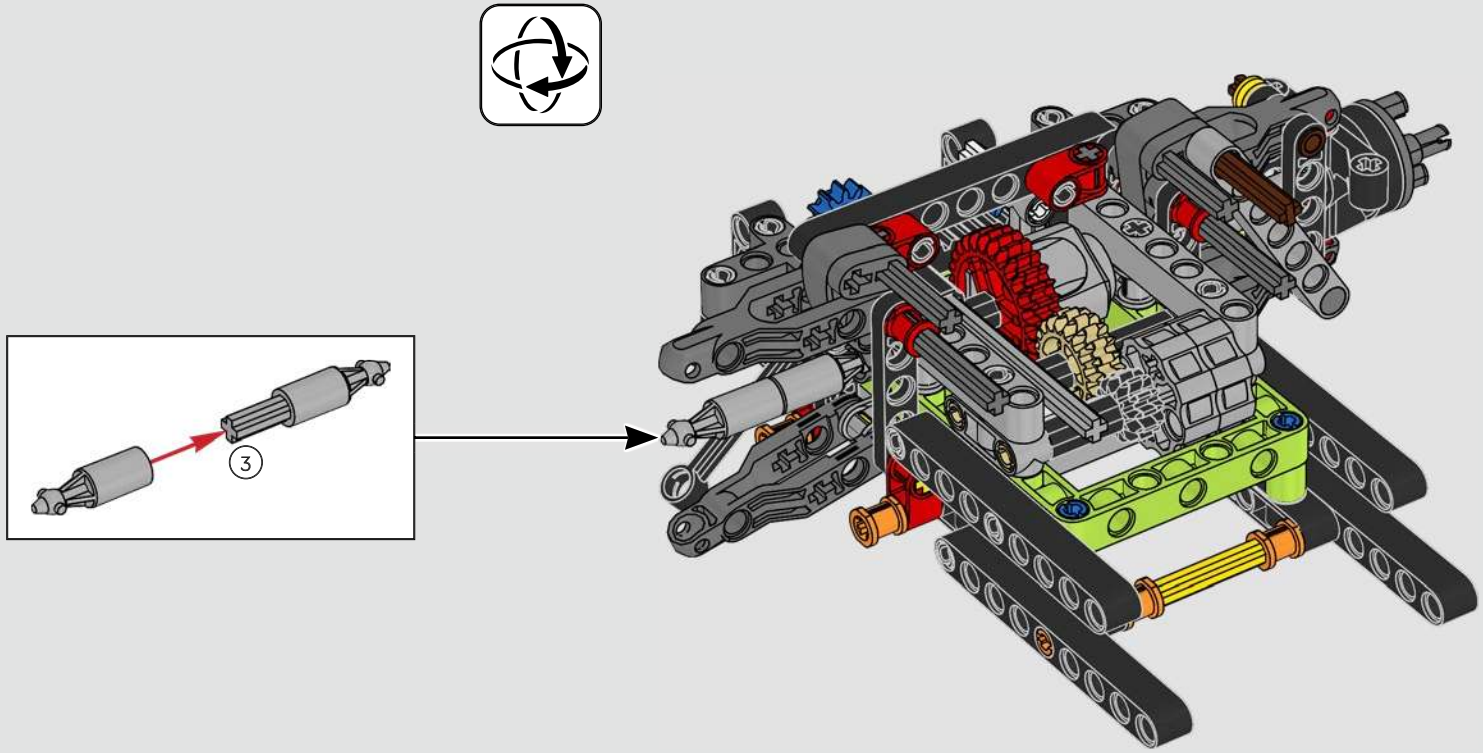

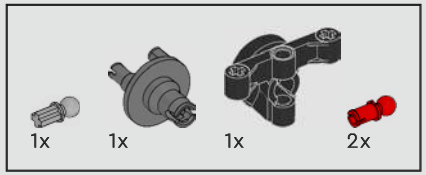

200

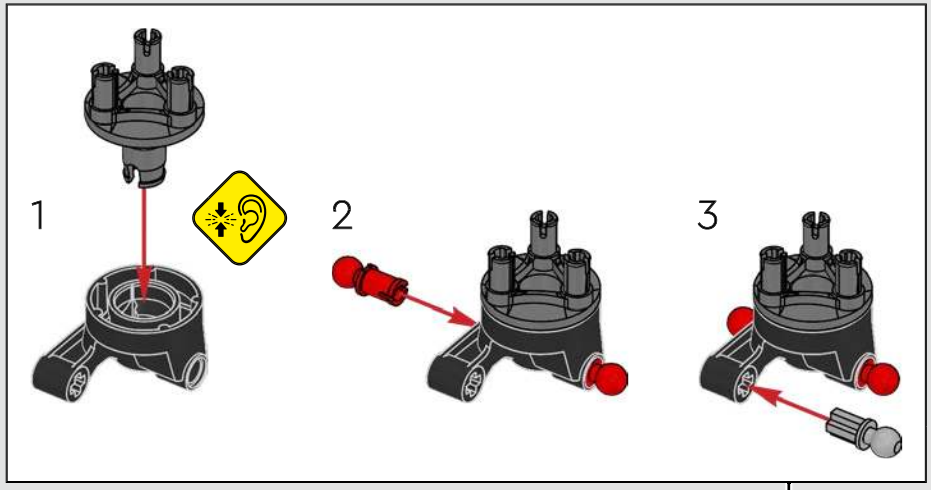

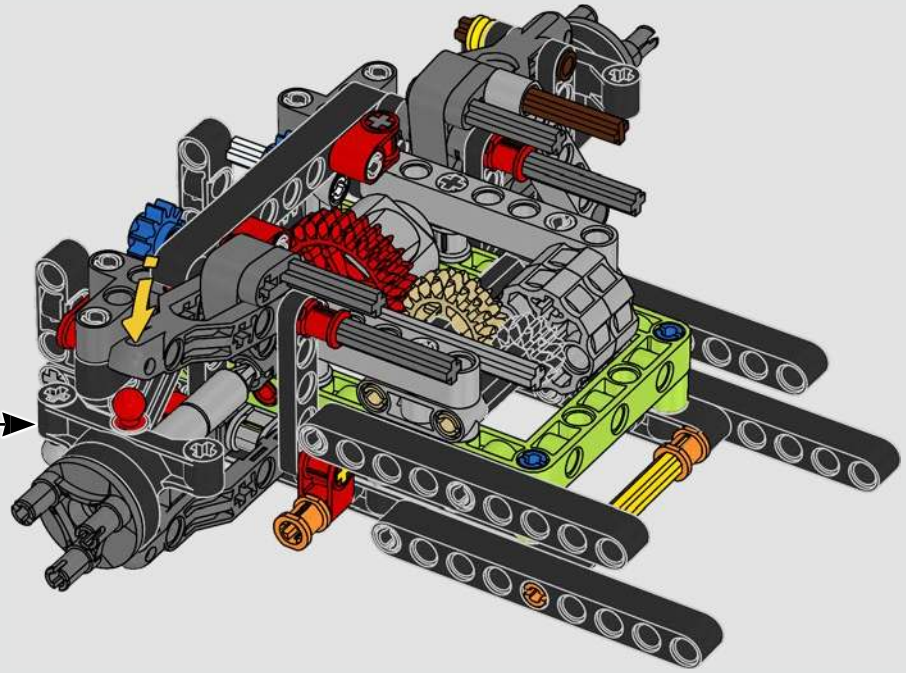

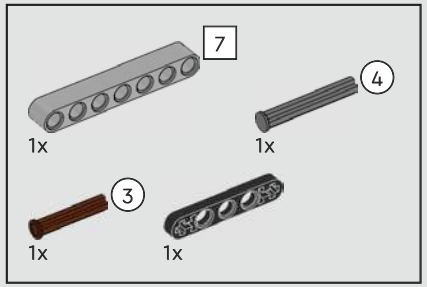

201

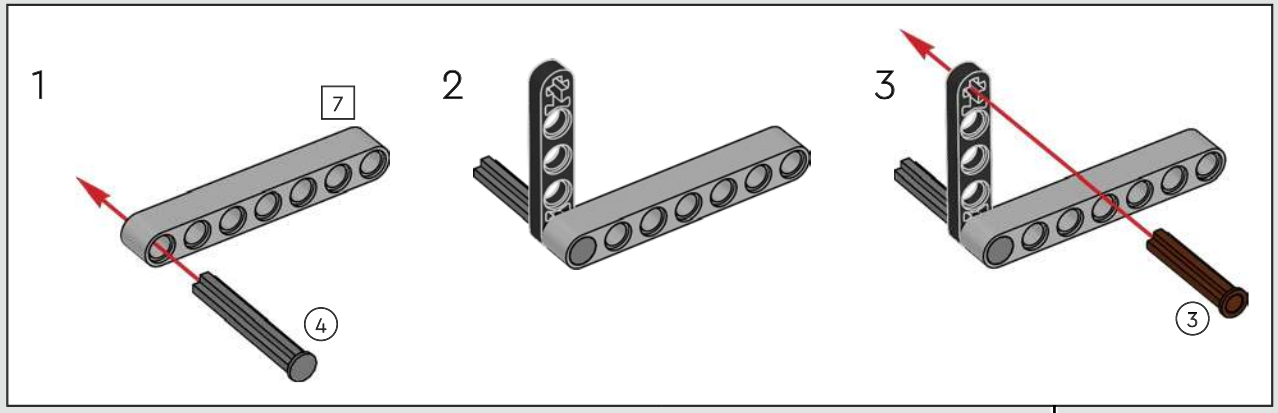

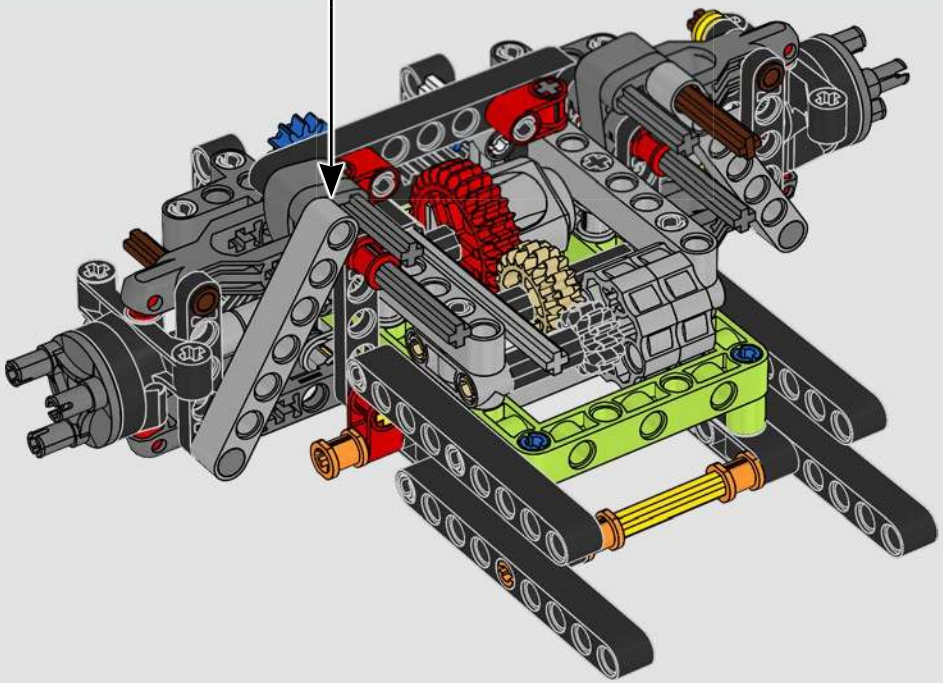

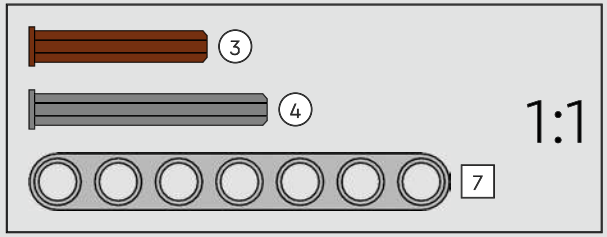

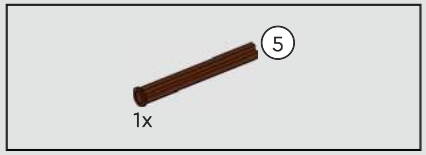

202

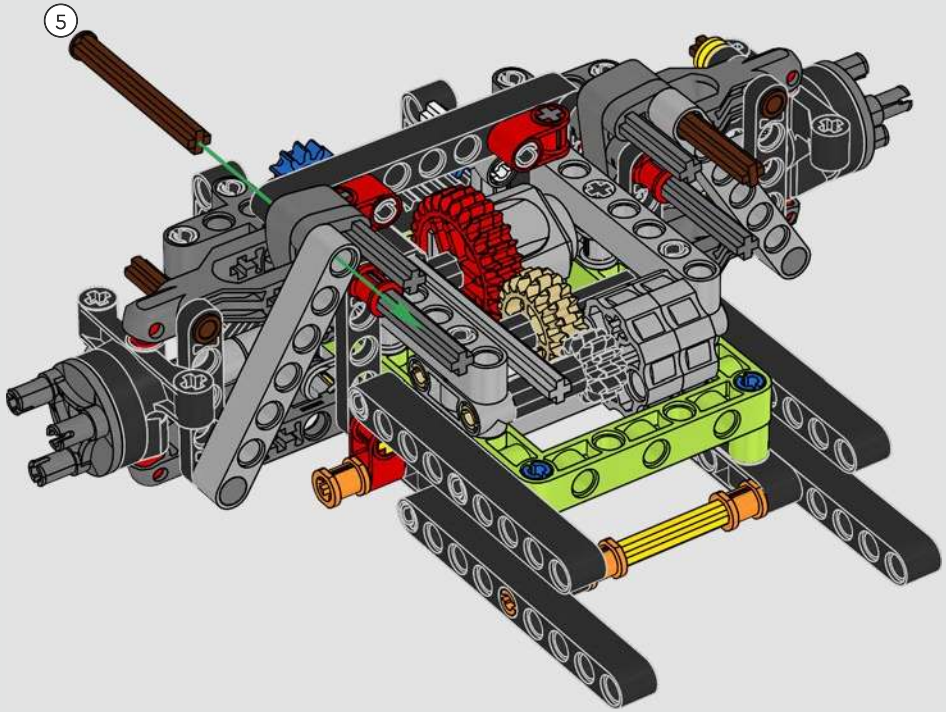

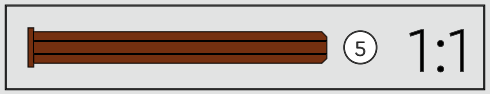

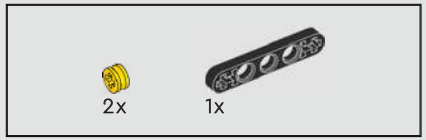

203

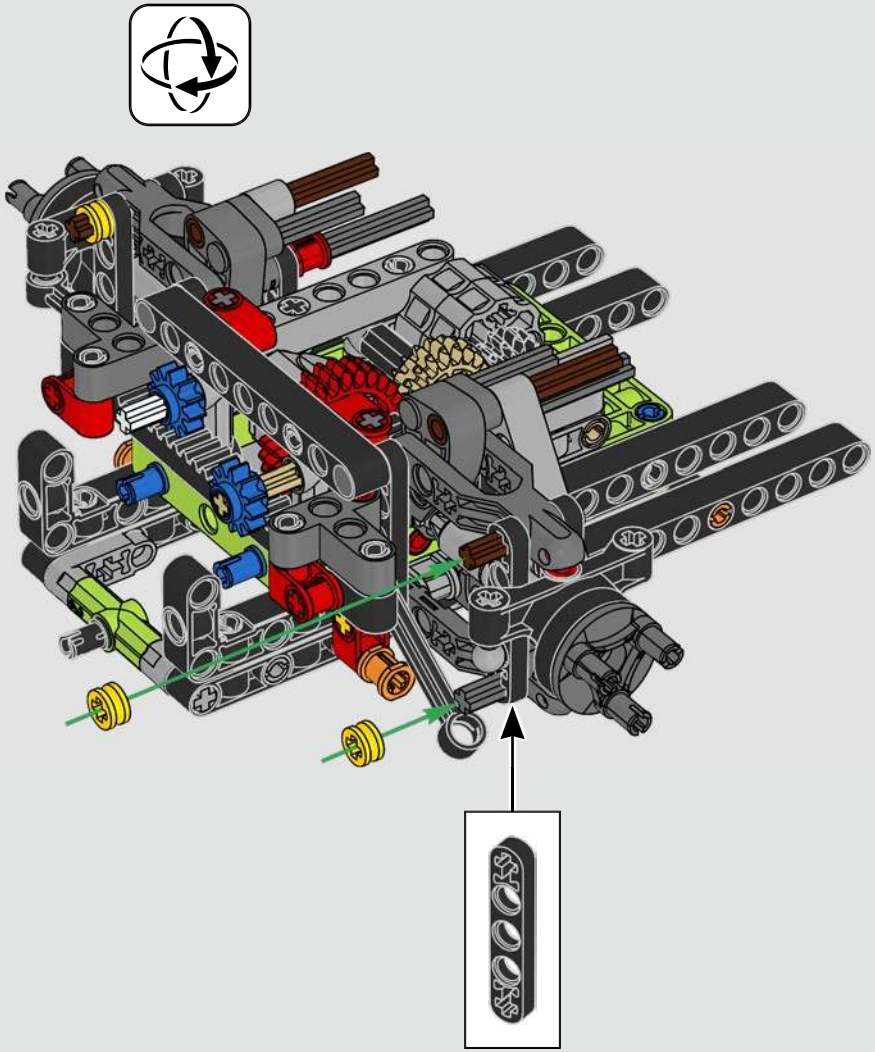

204

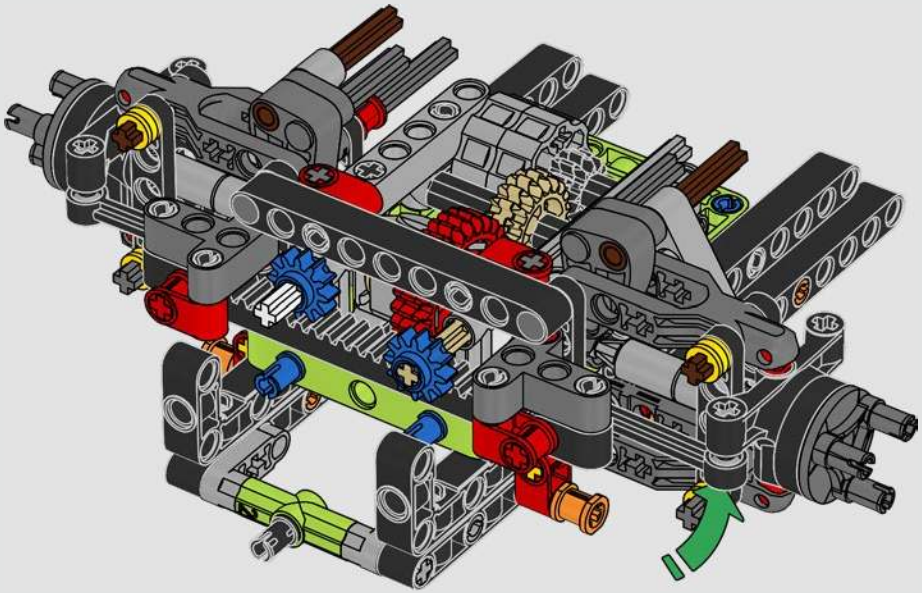

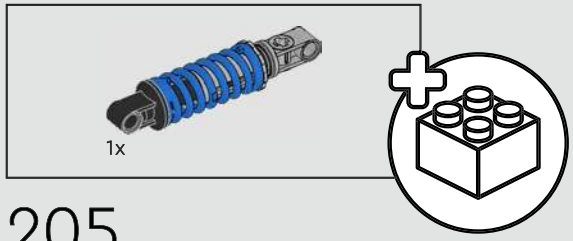

205

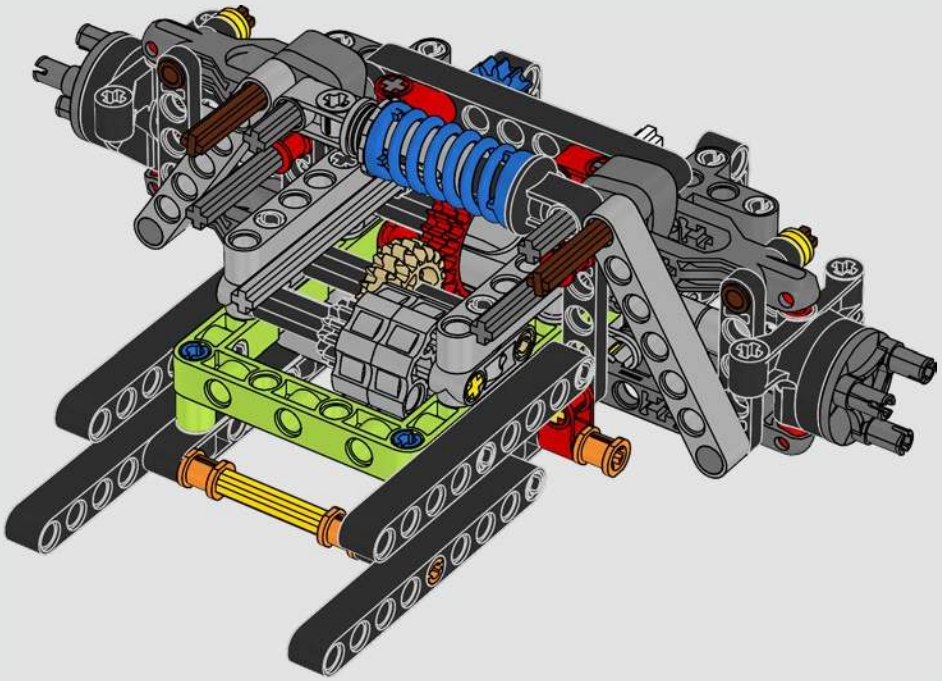

2x

206

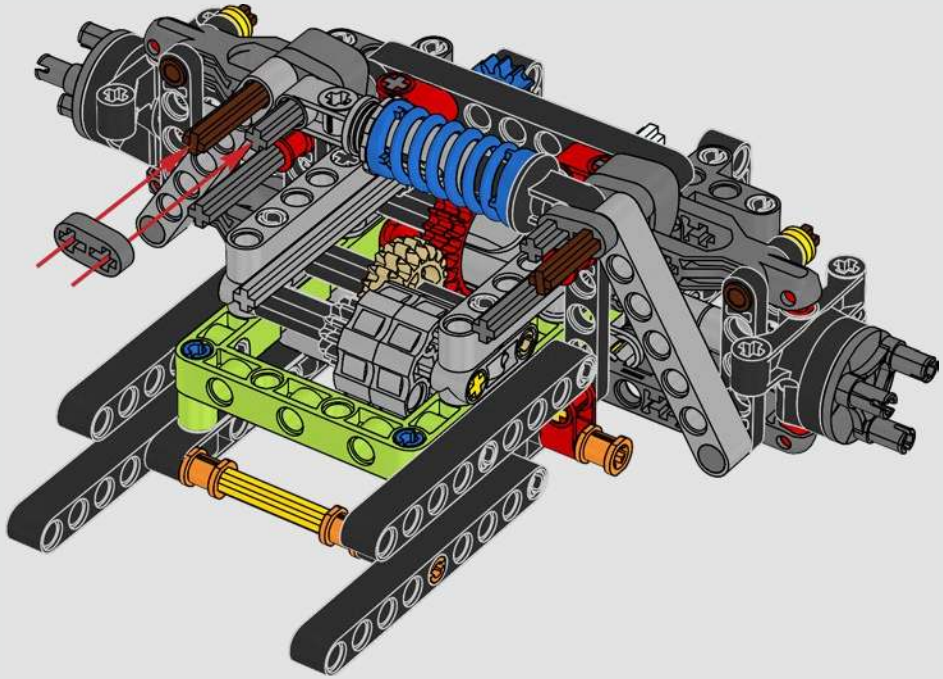

2x

207

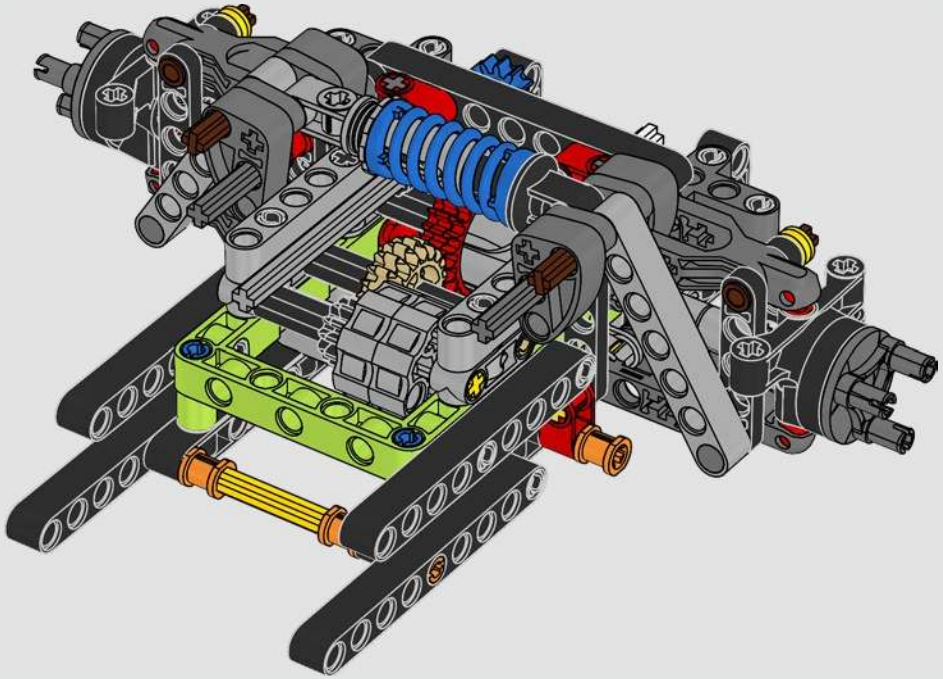

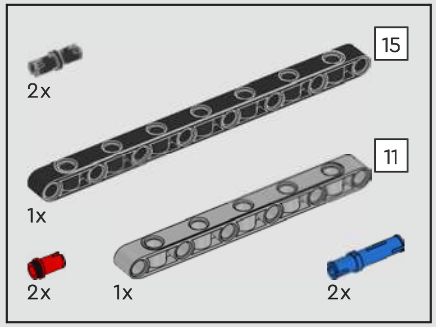

208

1

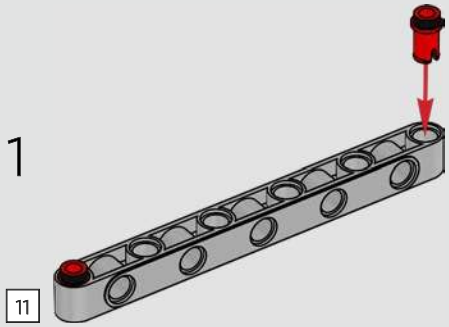

2

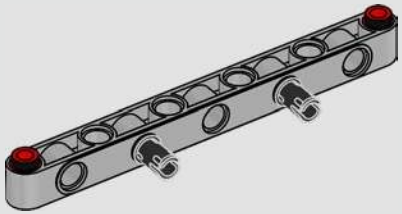

3

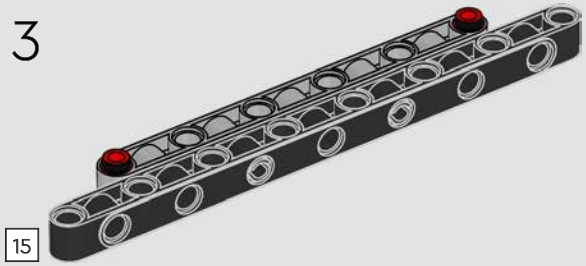

4

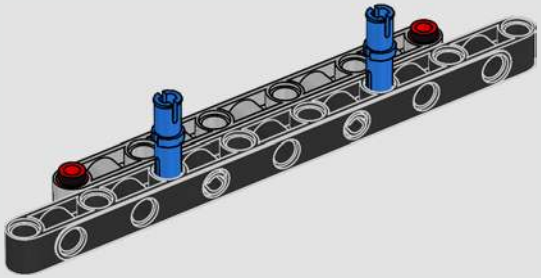

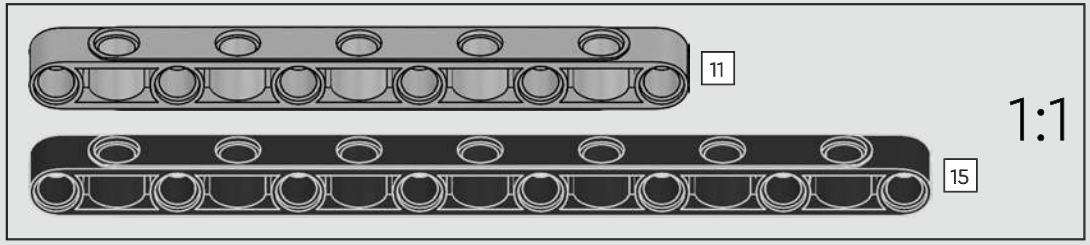

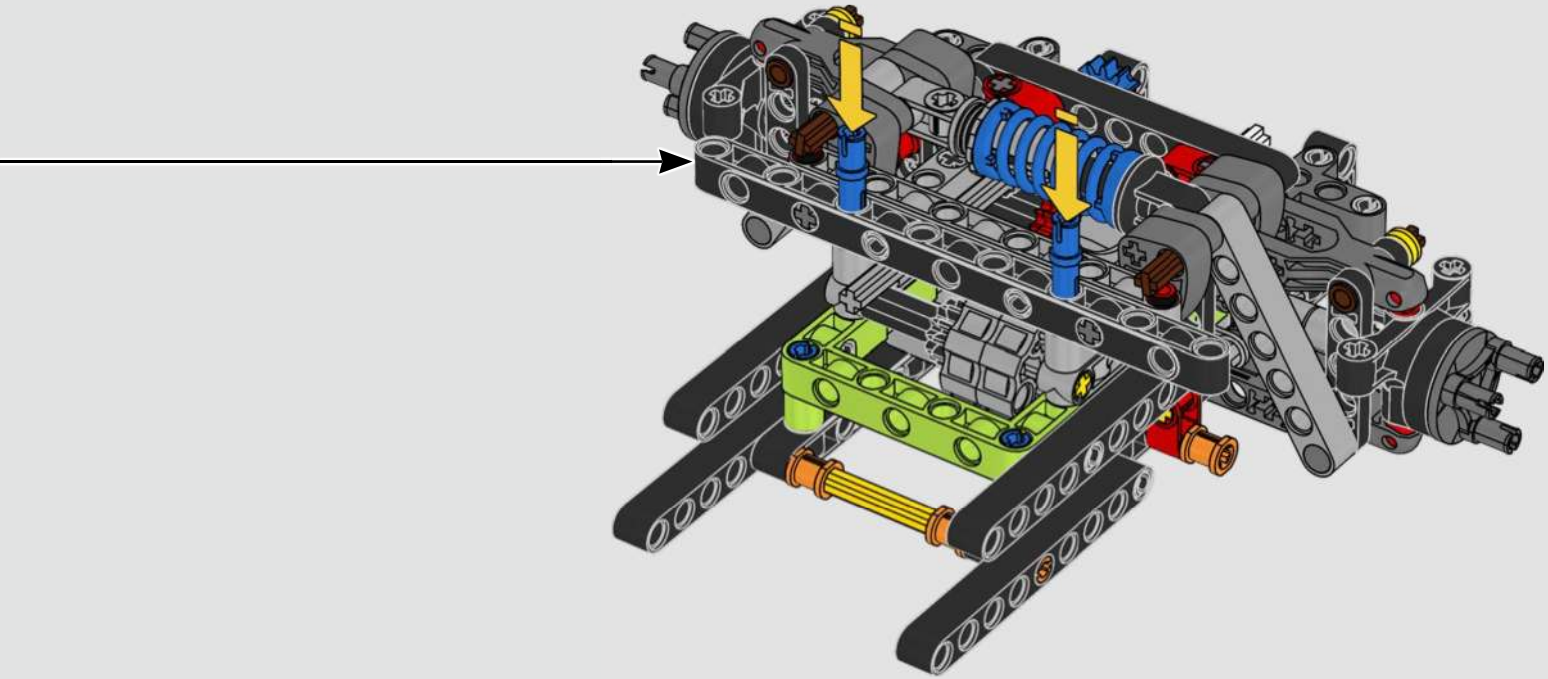

209

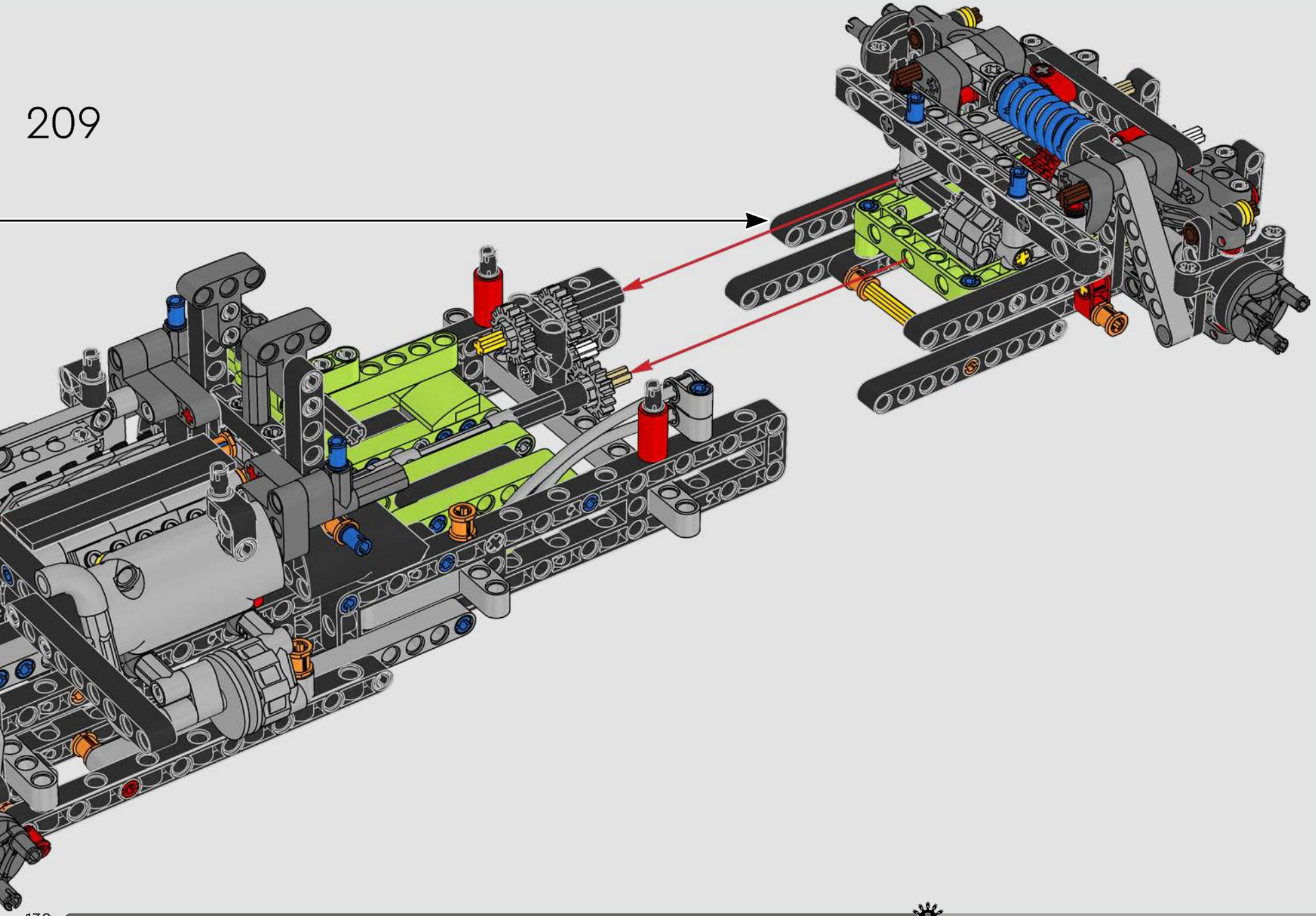

210

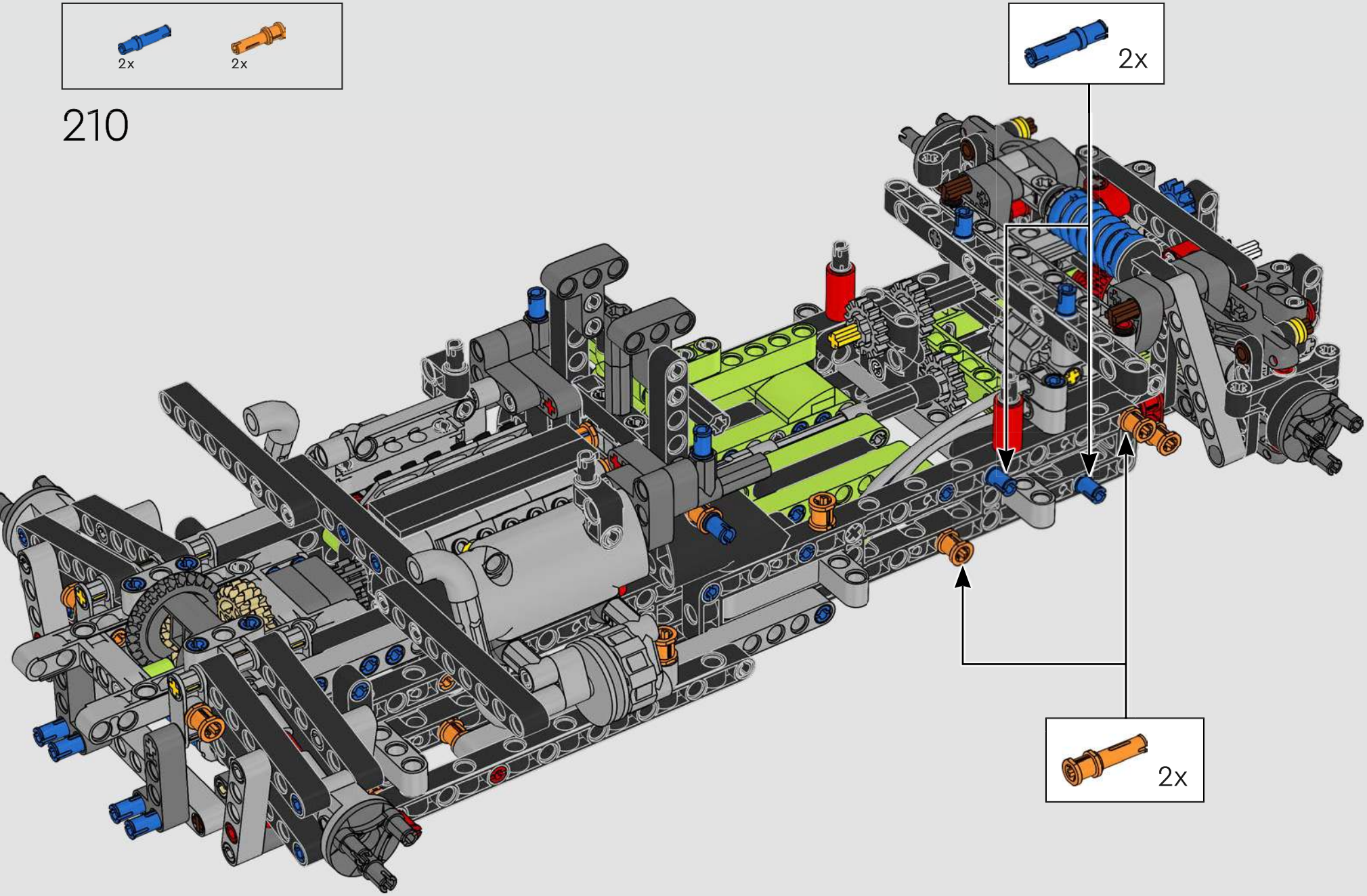

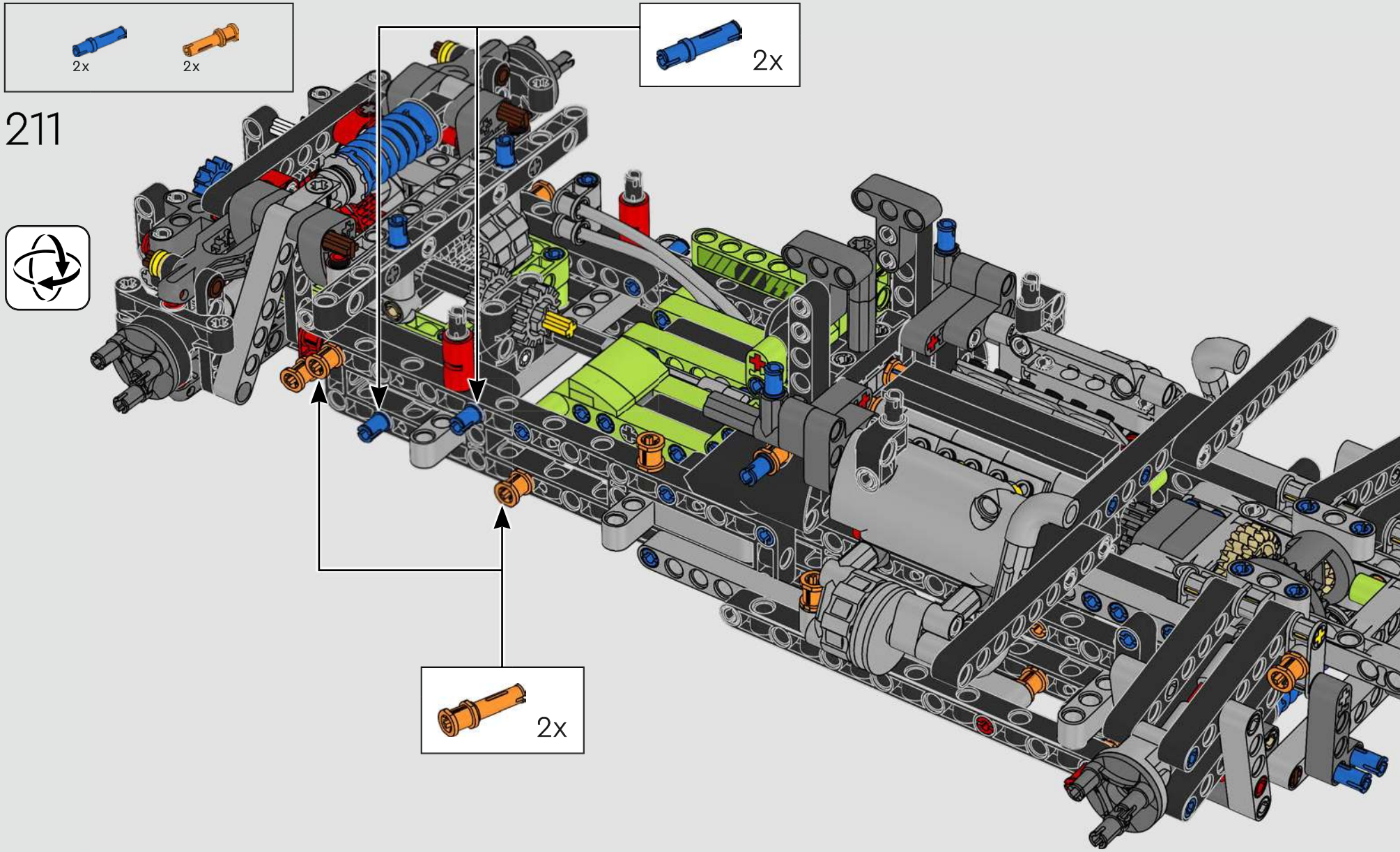
2x
2x
211
2x
2x

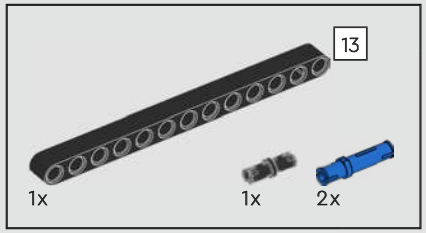

212

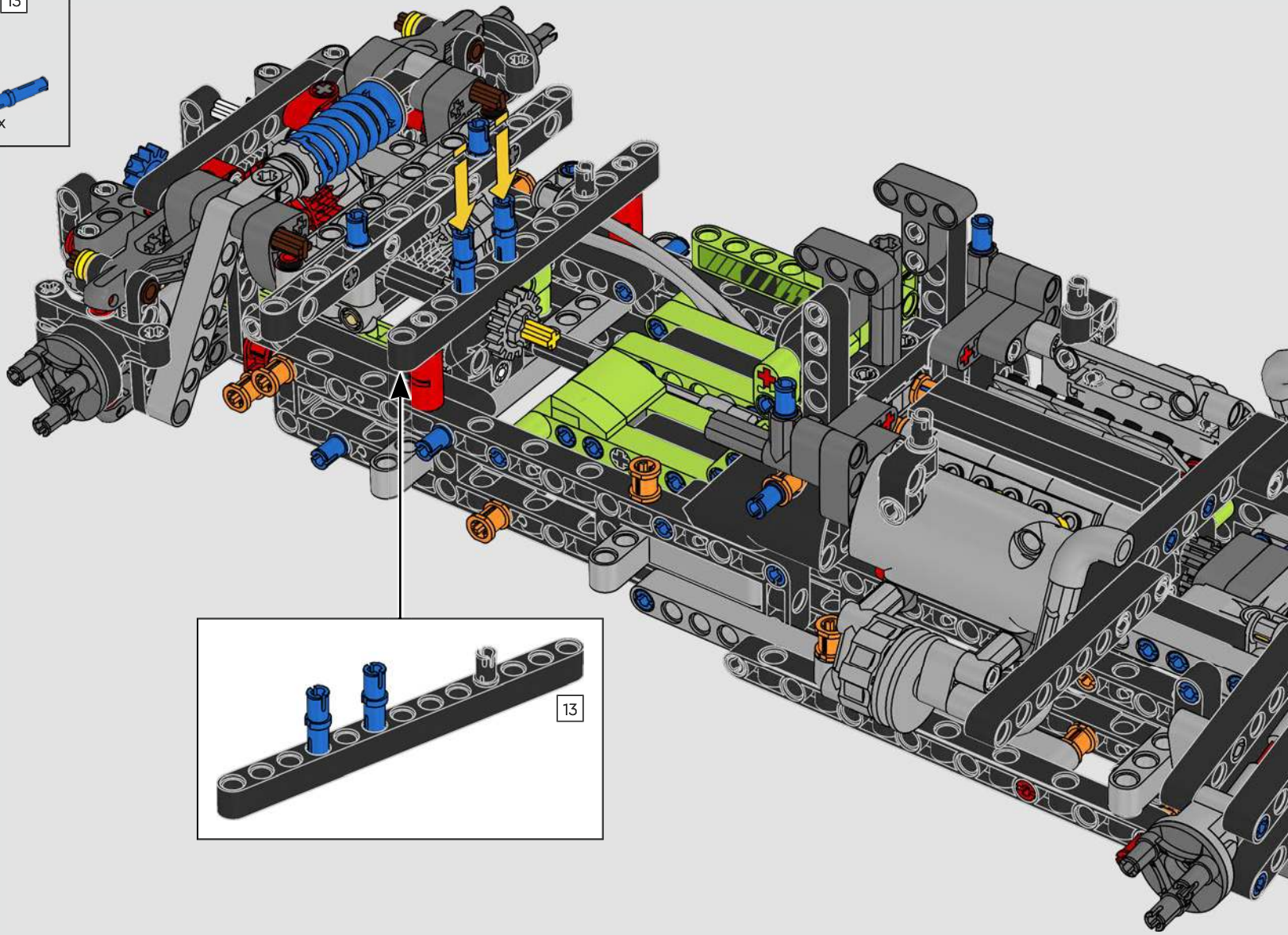

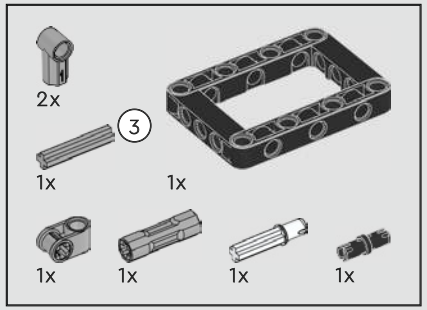

213

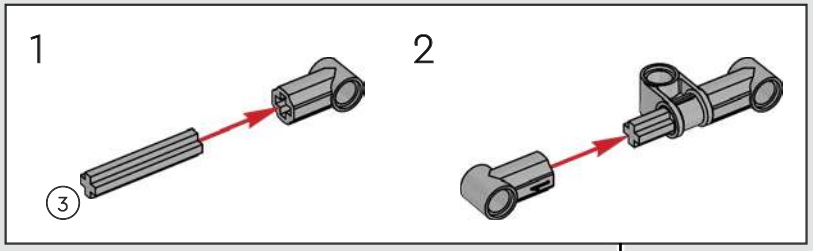

1

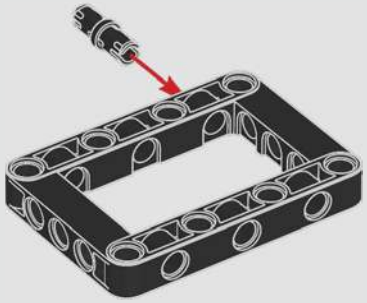

2

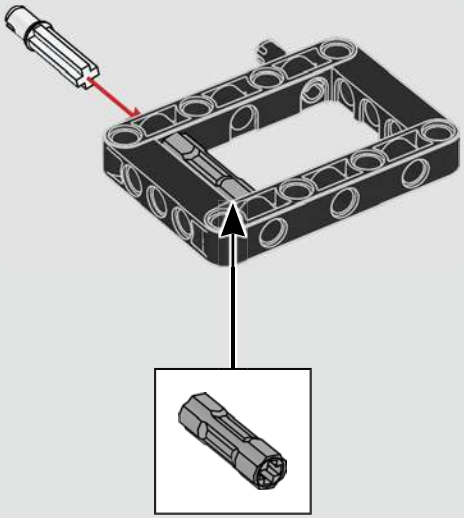

3

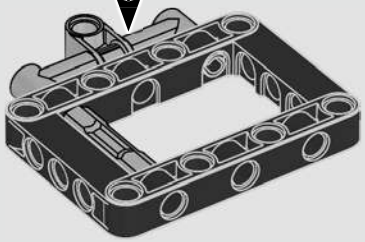

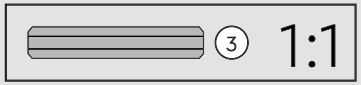

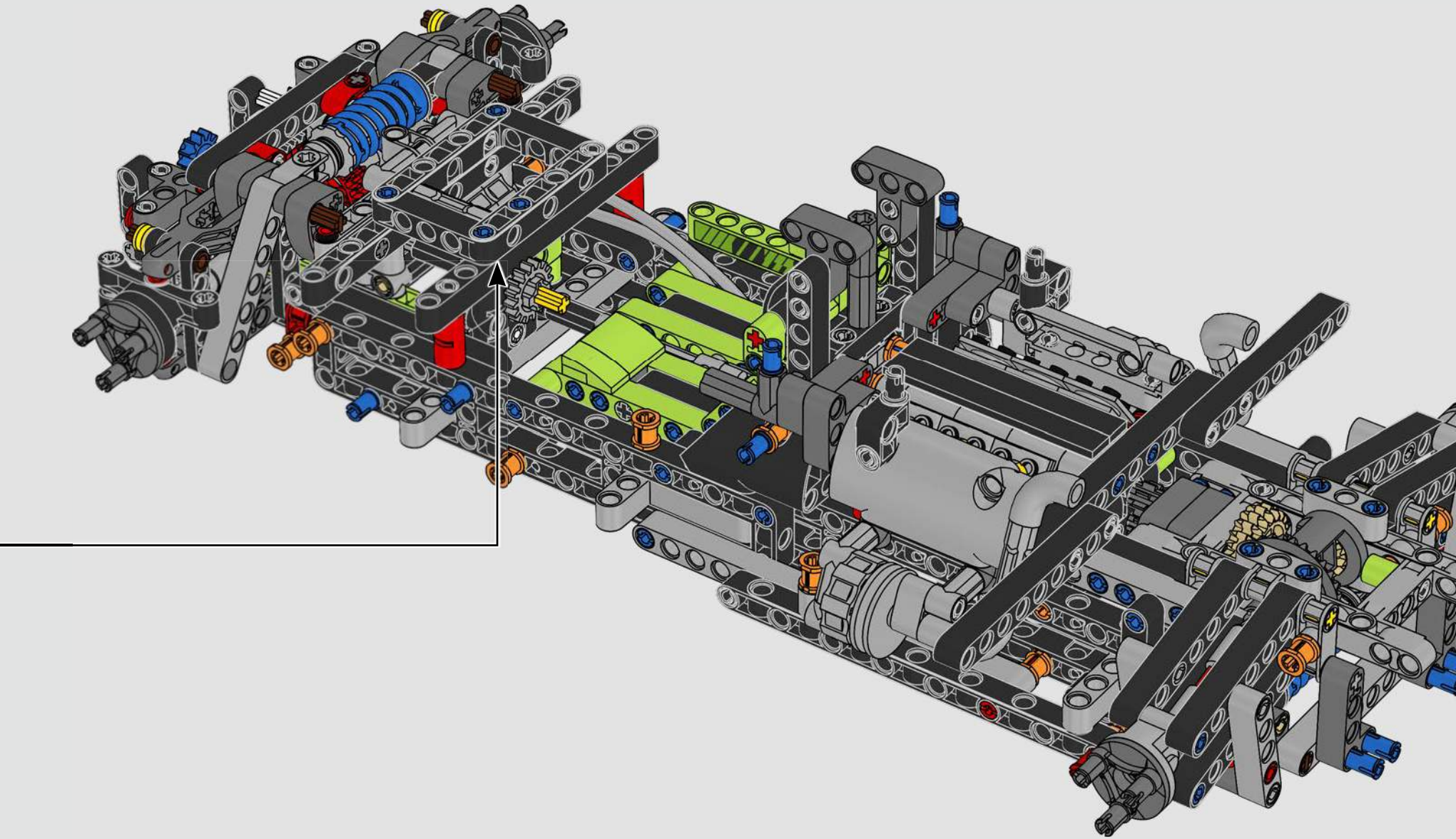

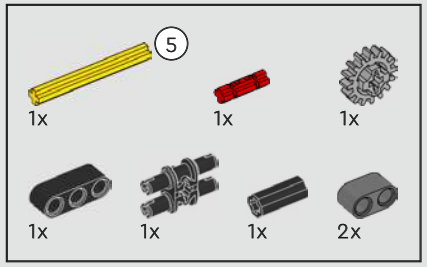

214

1

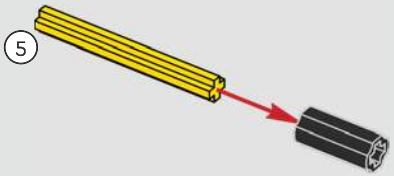

2

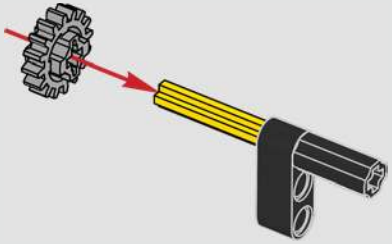

3

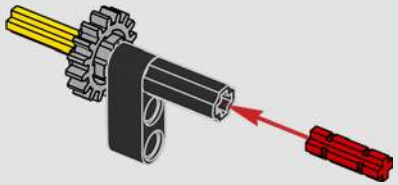

4

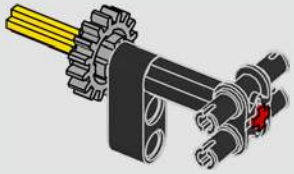

5

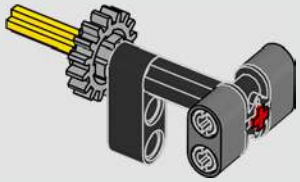

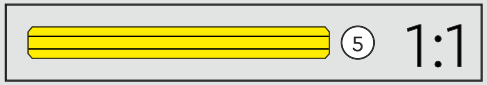

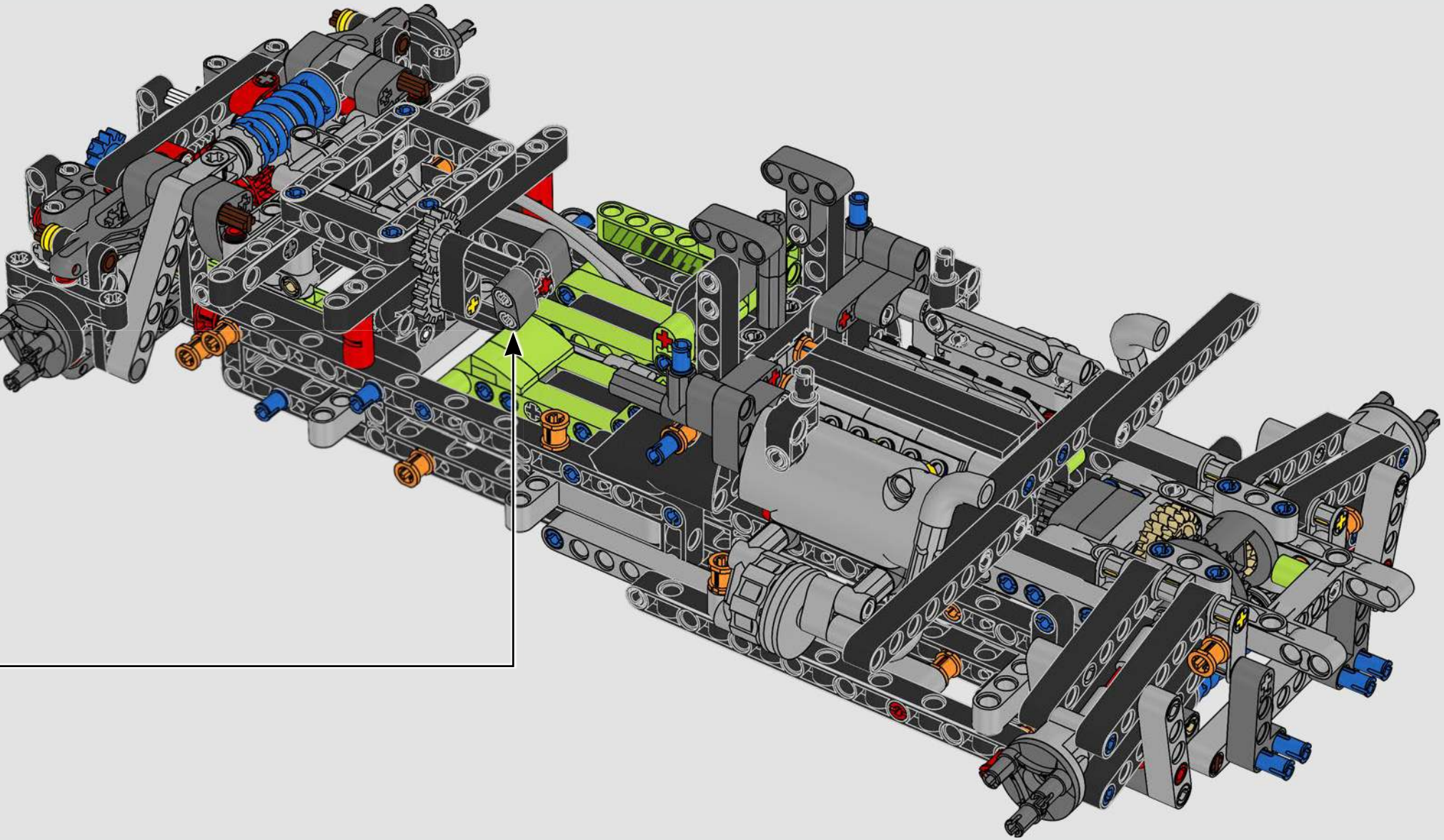

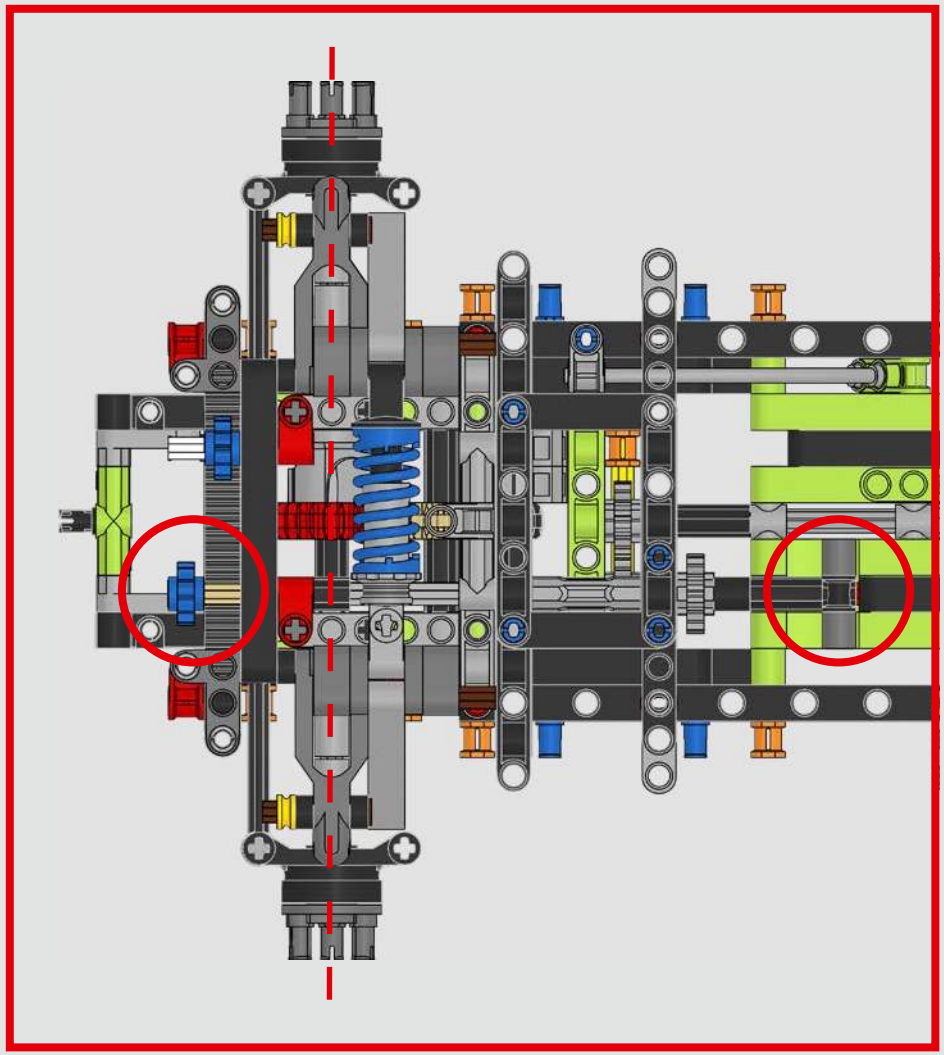

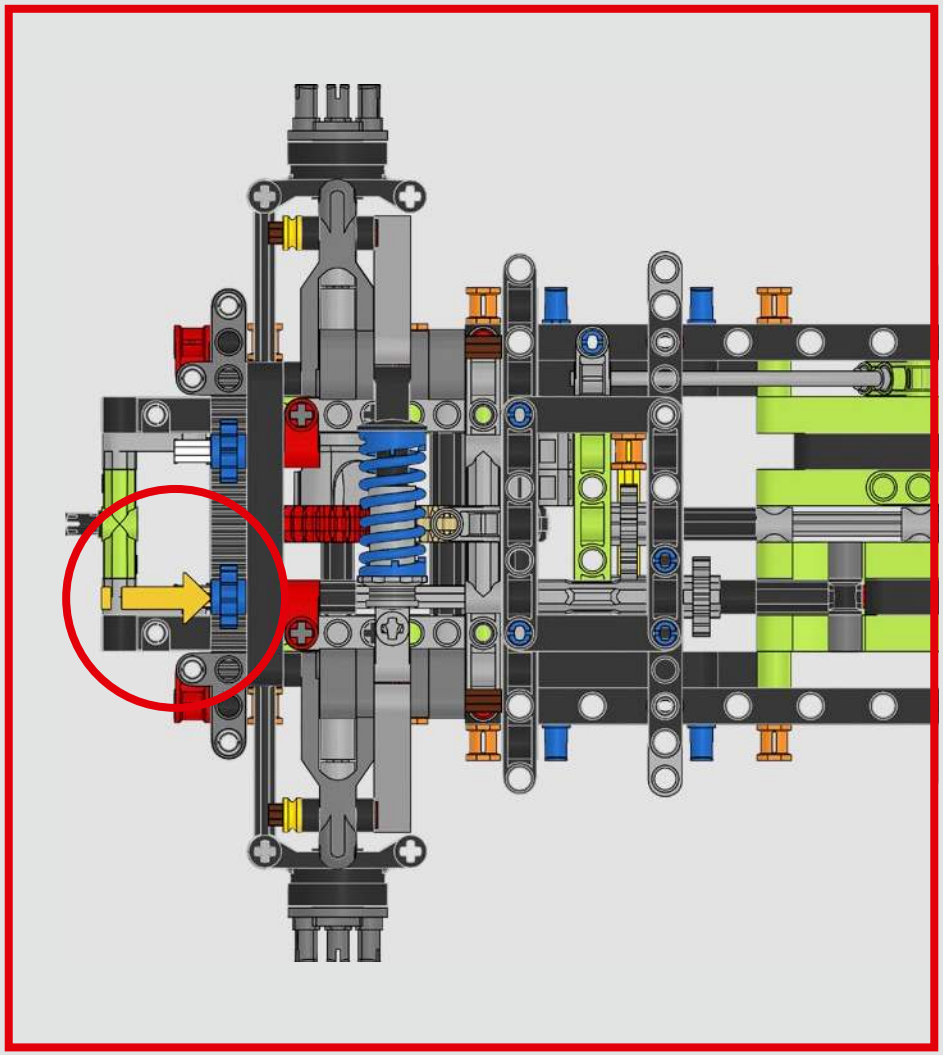

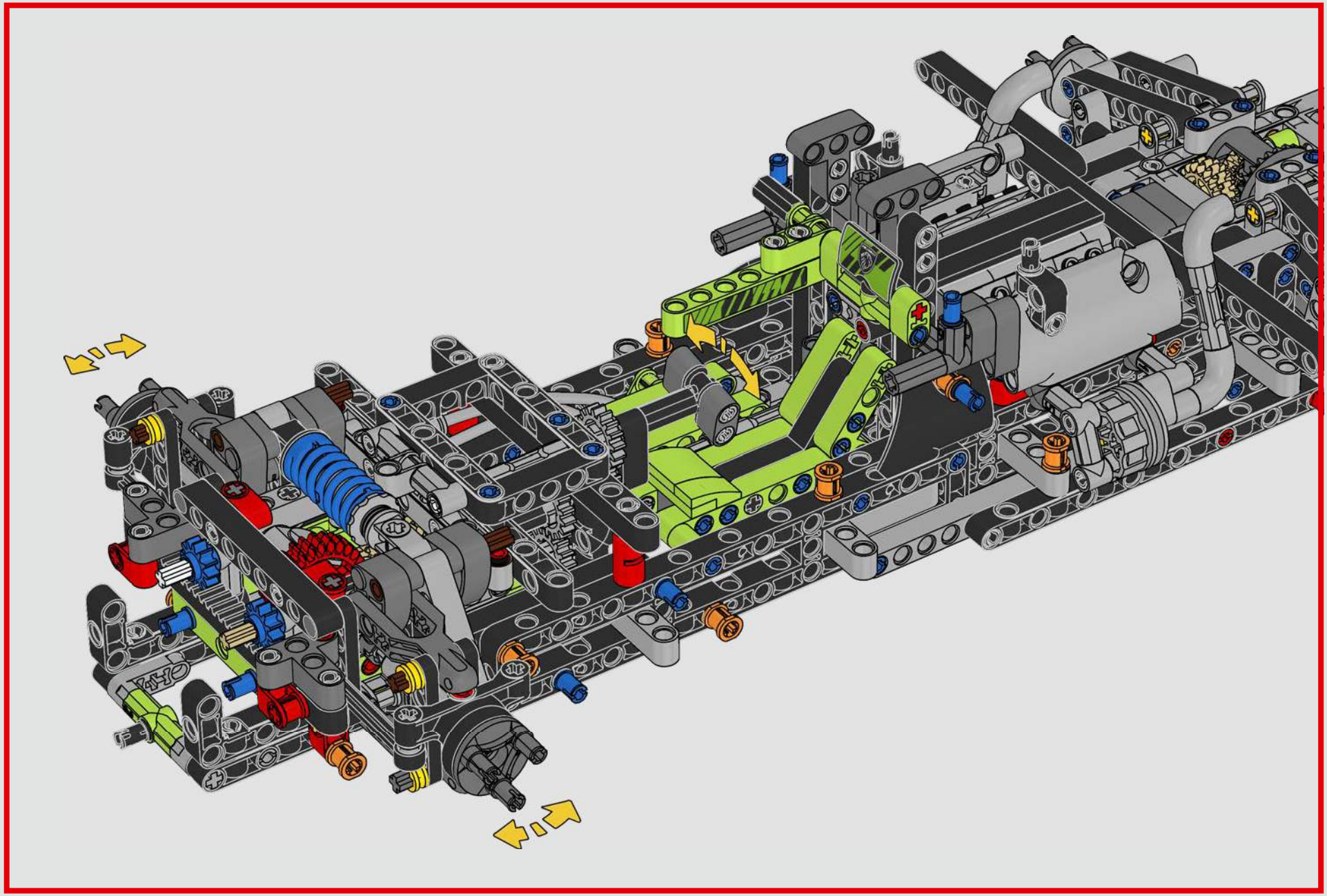

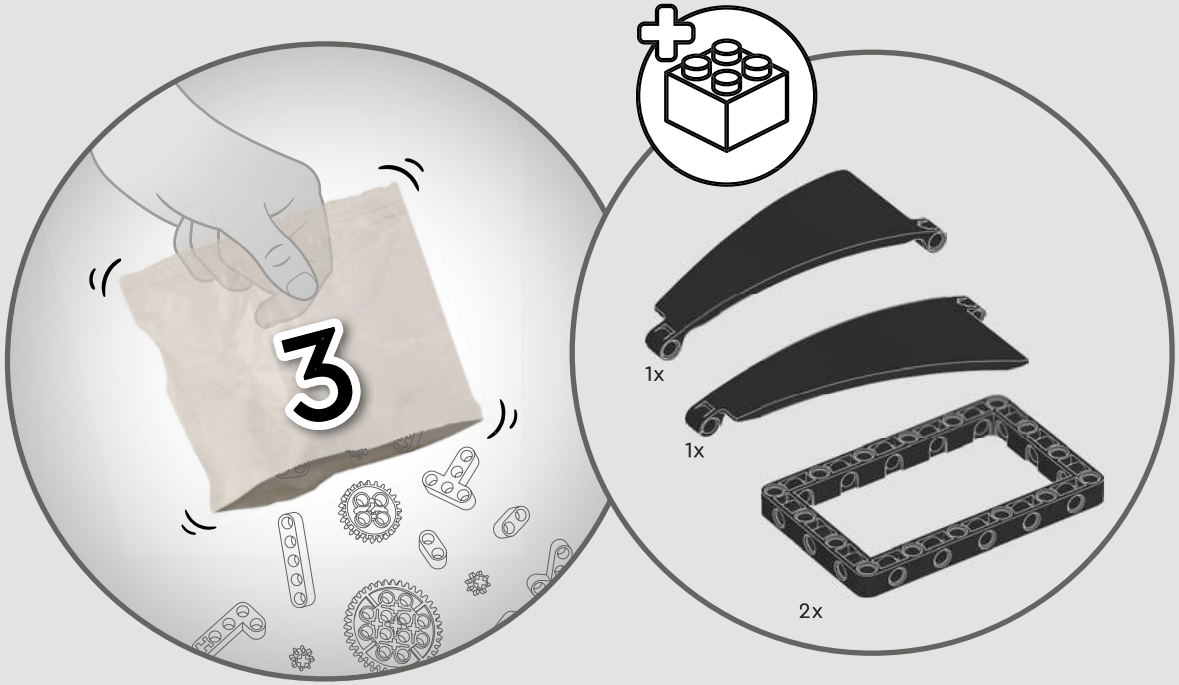
3
1x
1x
2x

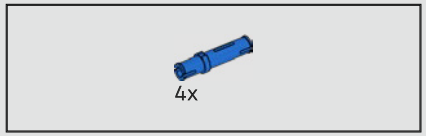

215

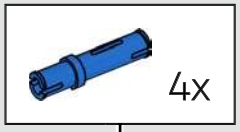

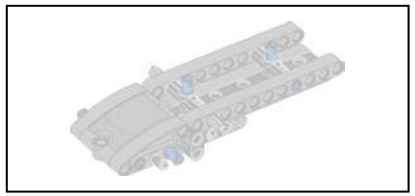

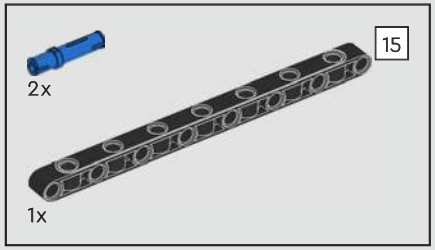

216

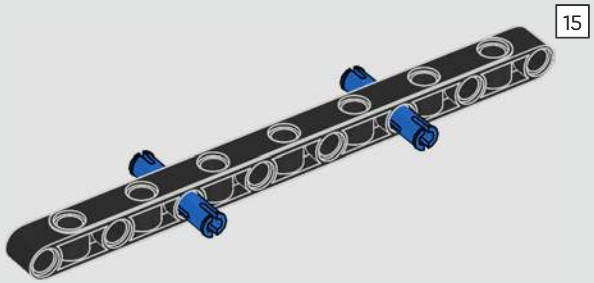

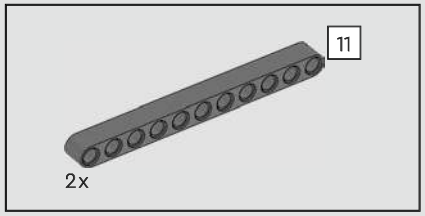

217

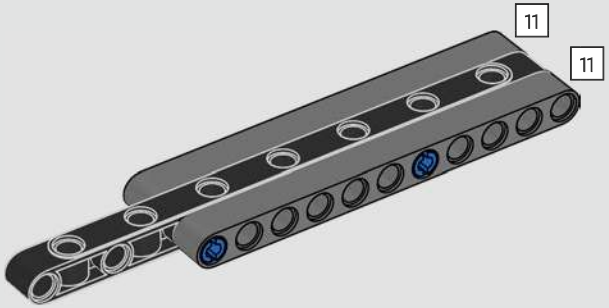

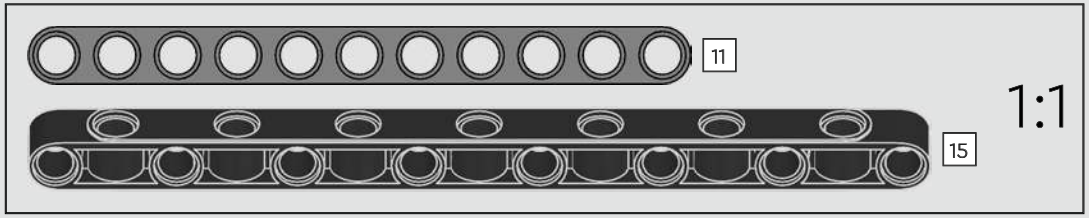

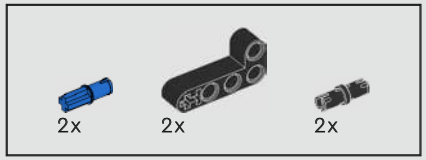

218

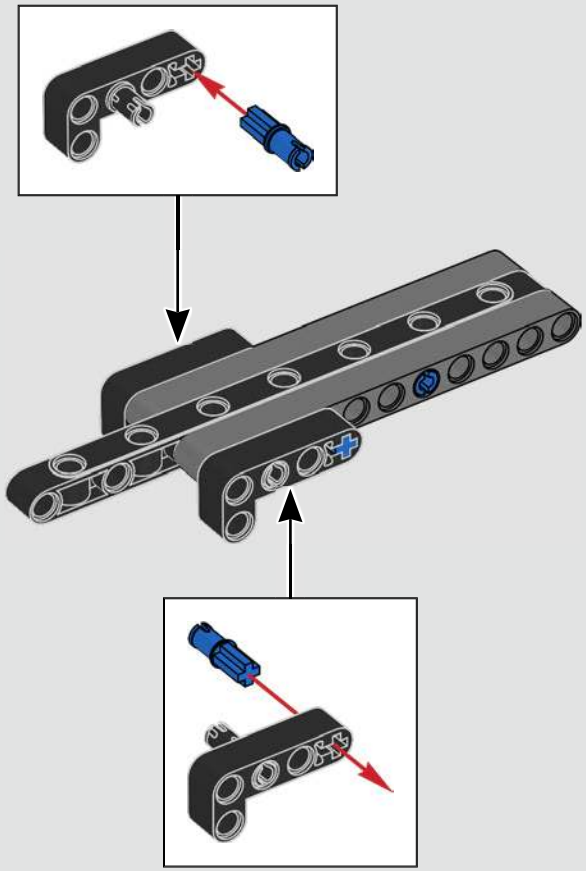

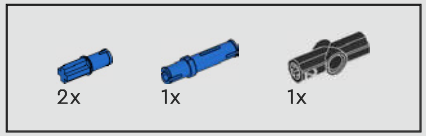

219

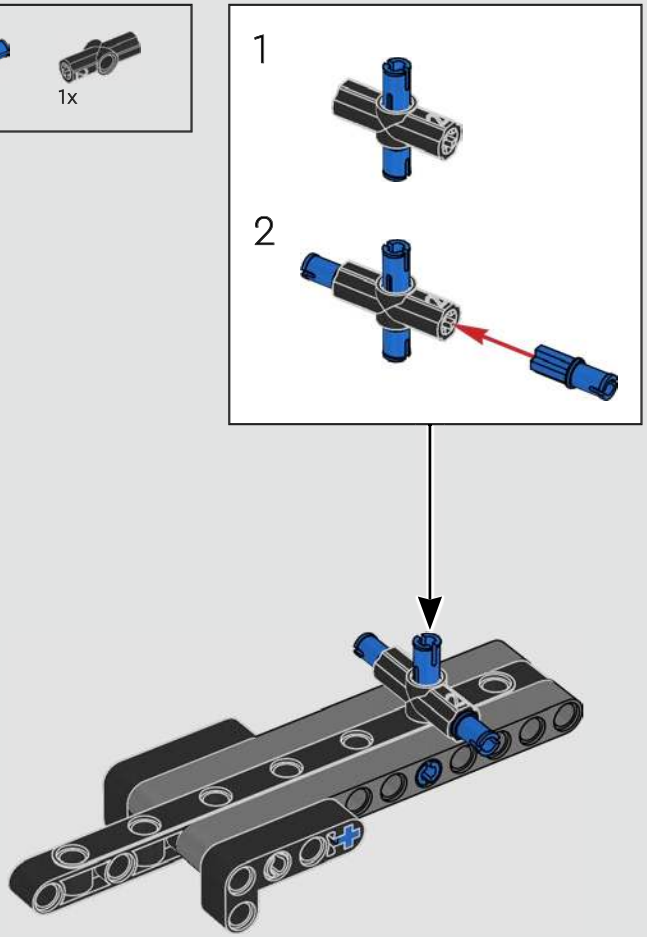

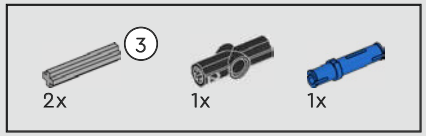

220

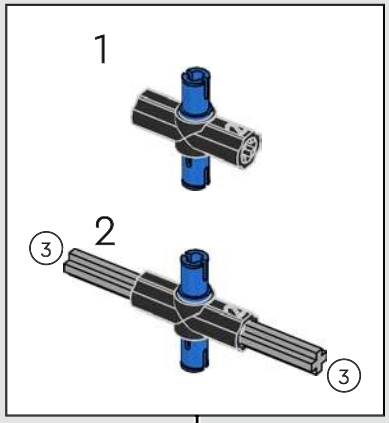

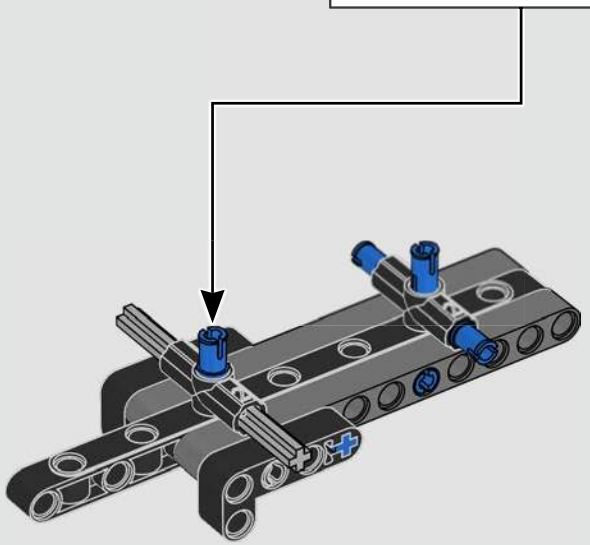

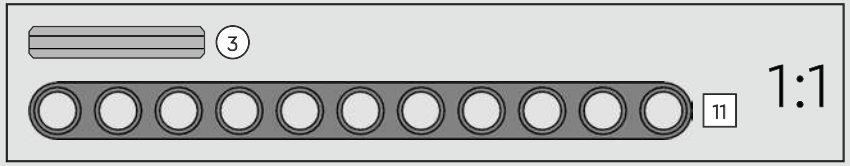

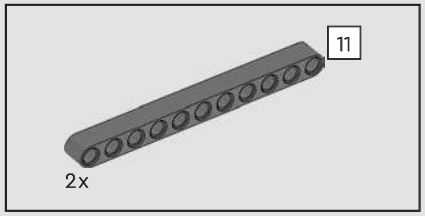

221

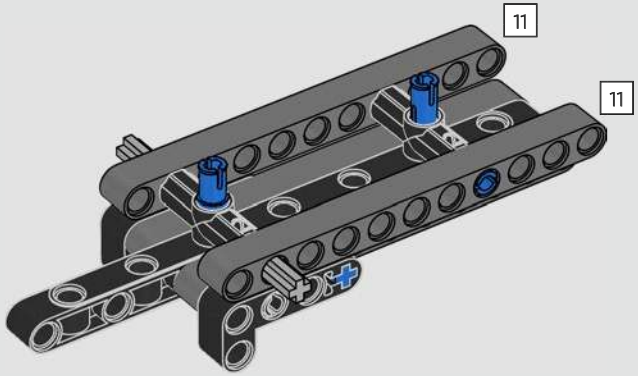

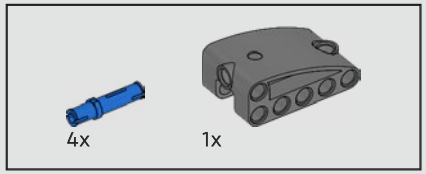

222

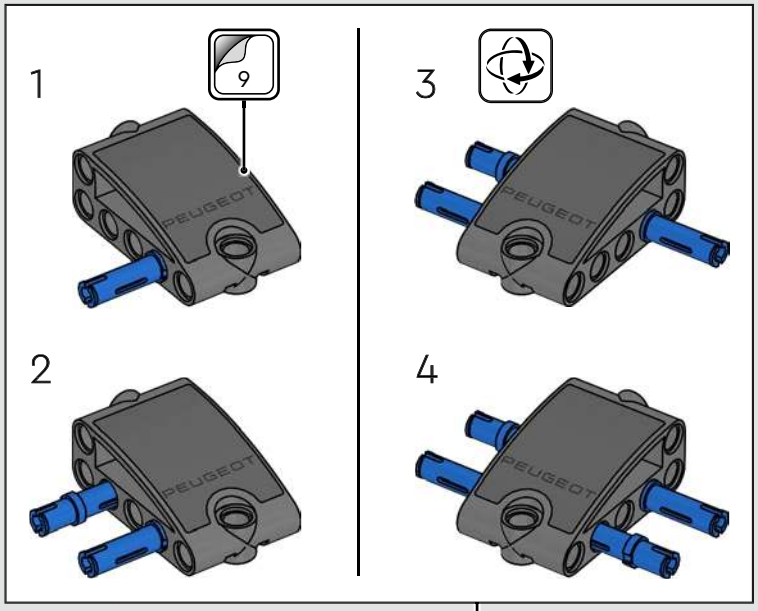

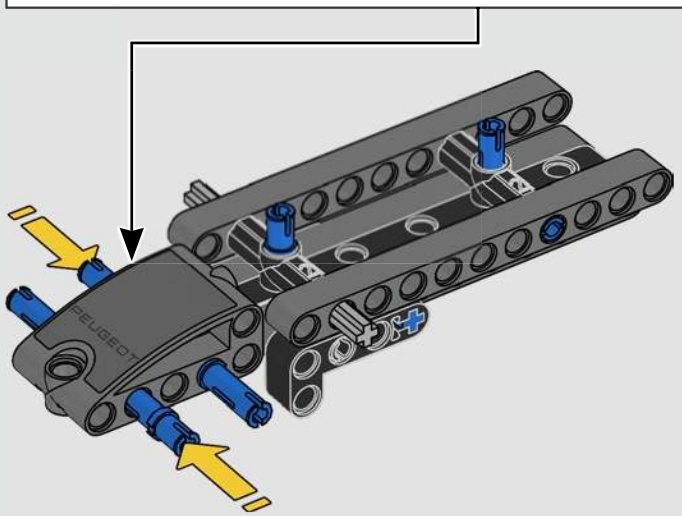

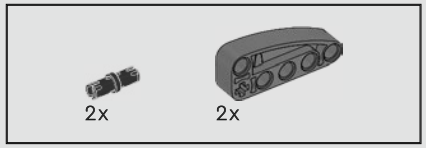

223

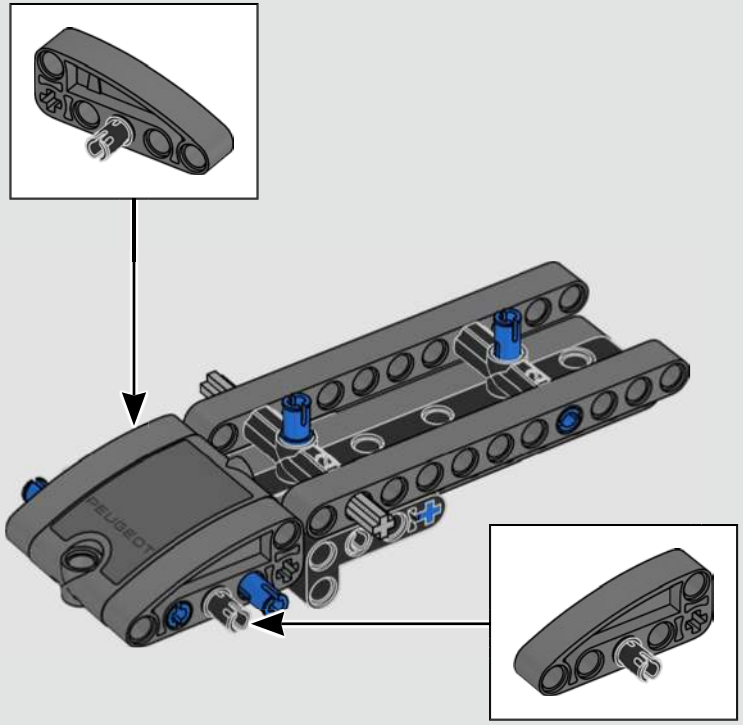

224

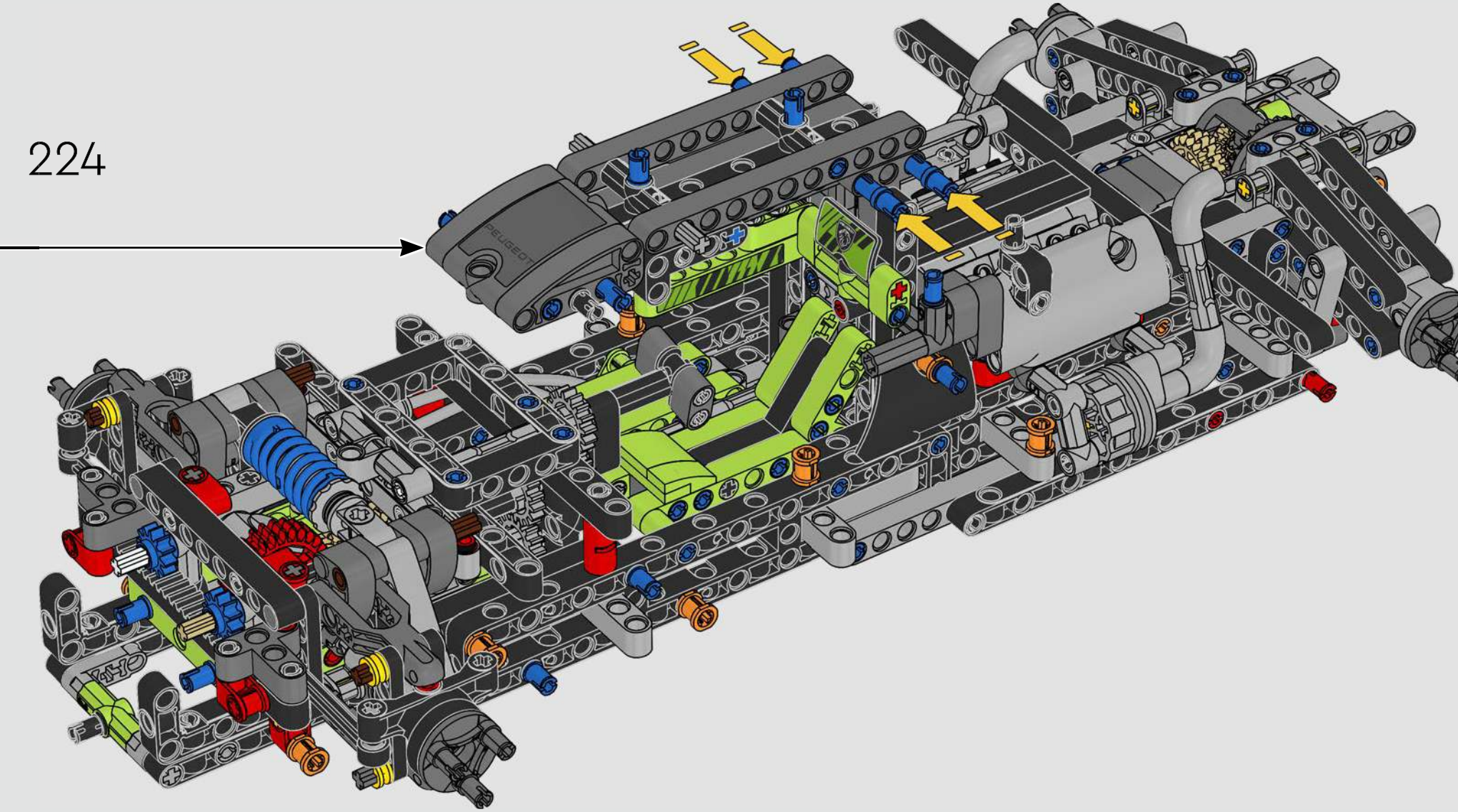

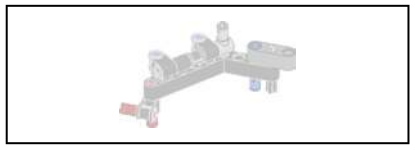

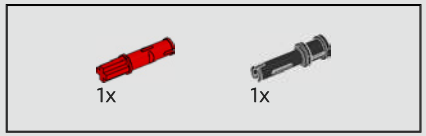

225

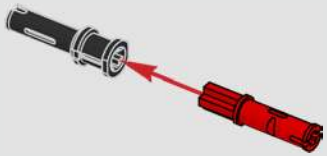

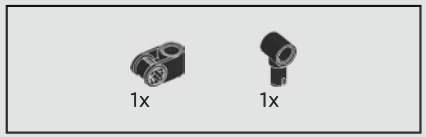

226

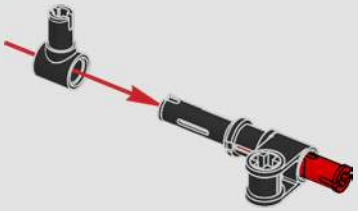

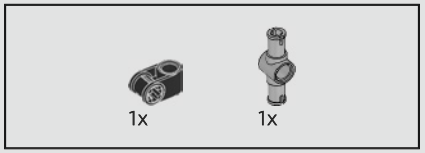

227

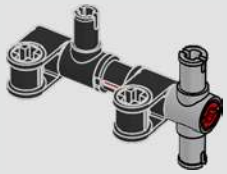

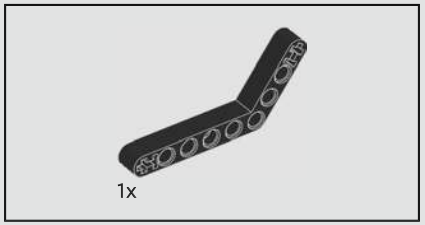

228

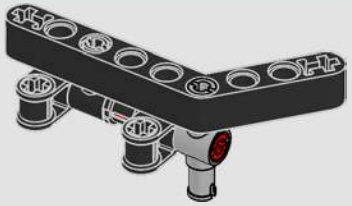

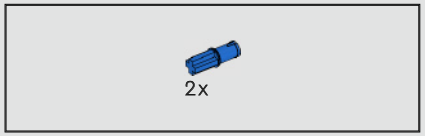

229

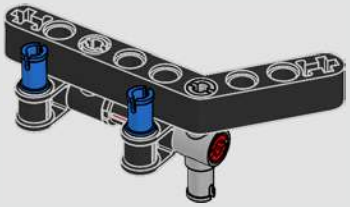

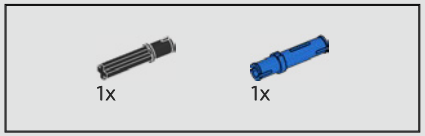

230

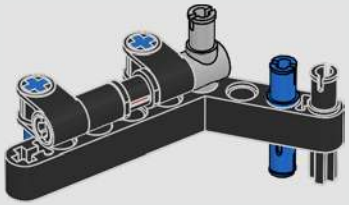

231

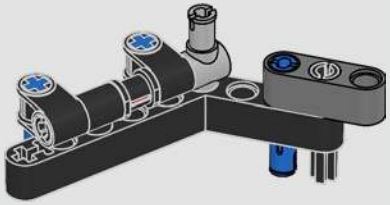

232

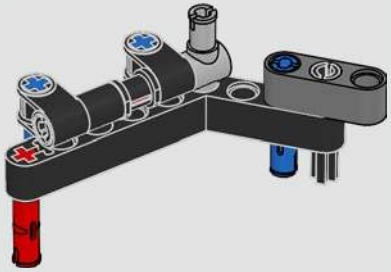

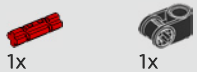

233

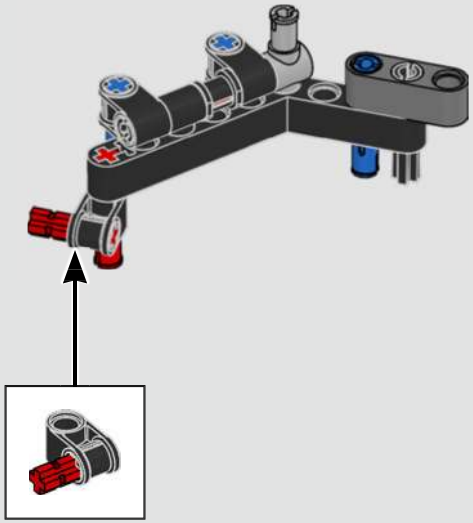

234

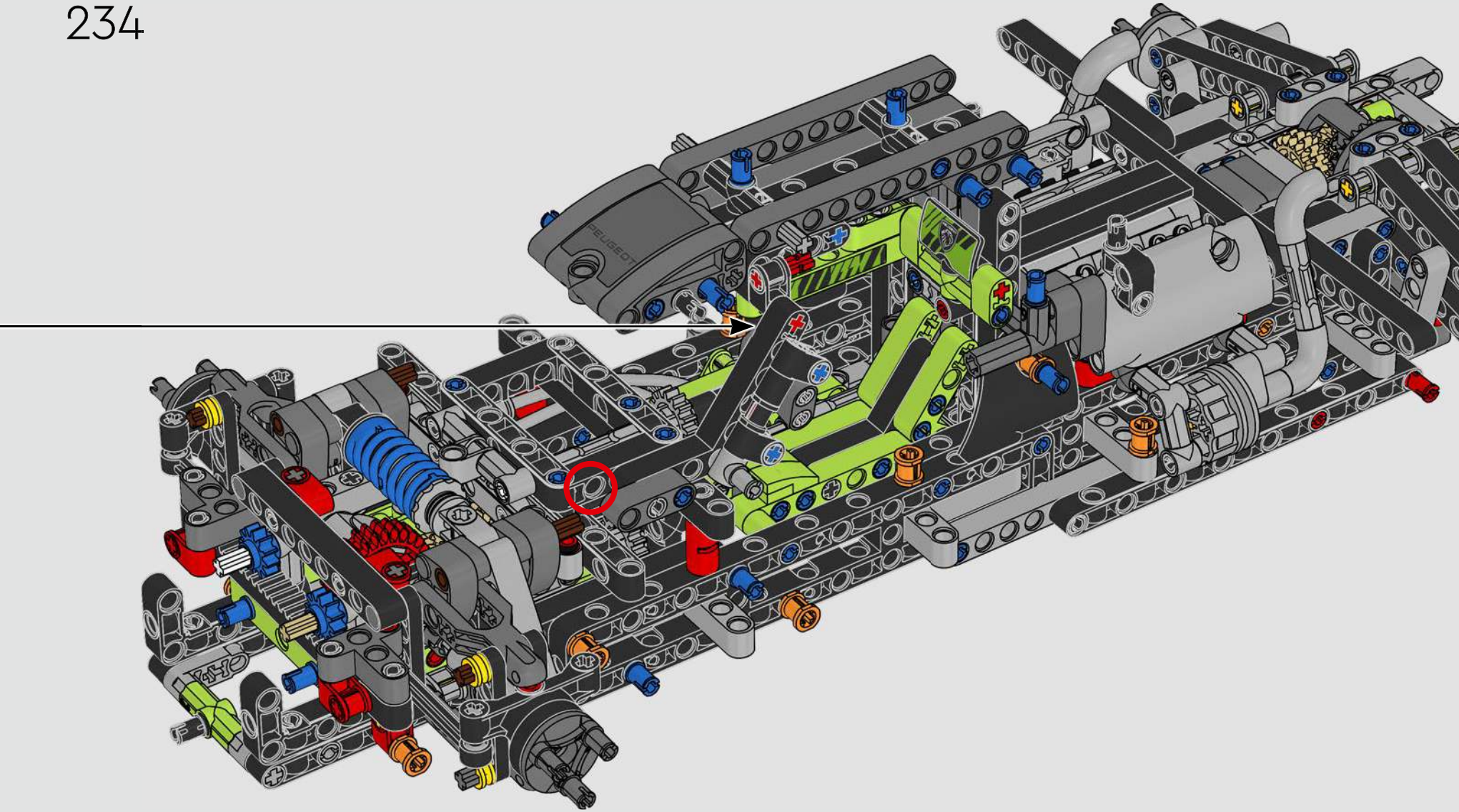

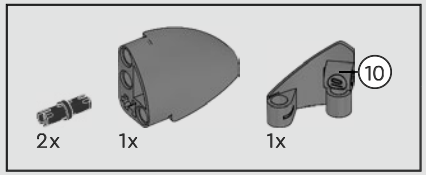

235

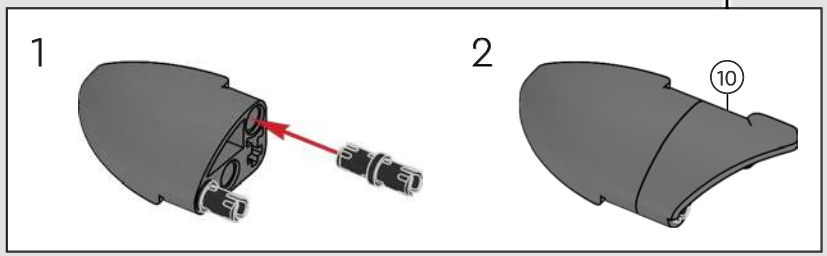

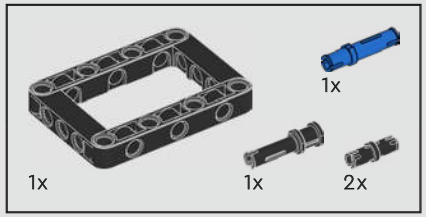

236

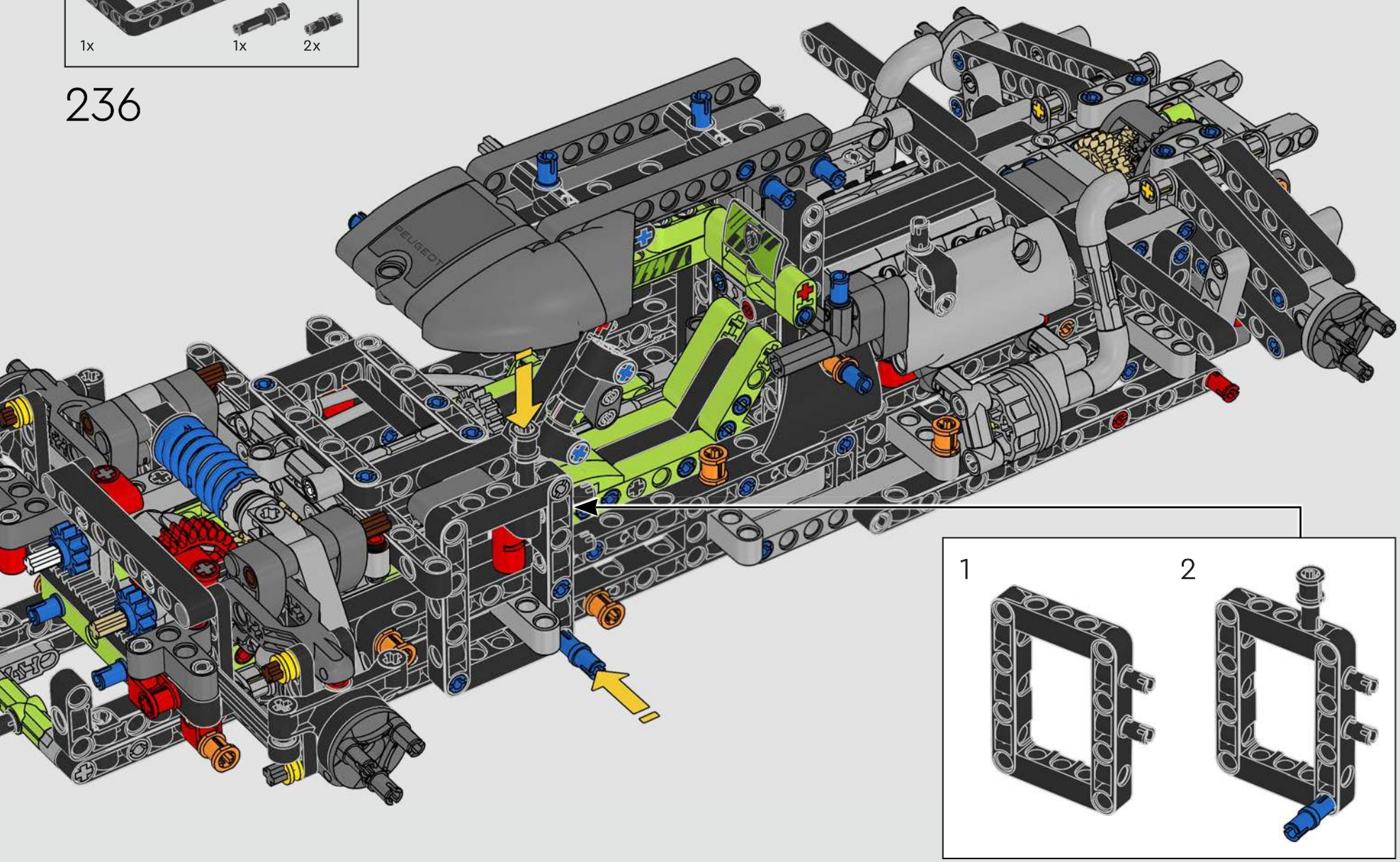

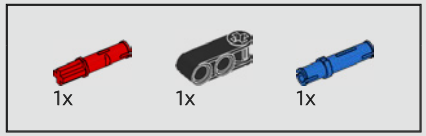

237

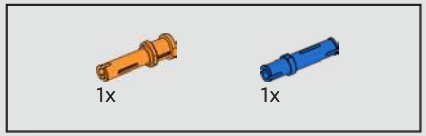

238

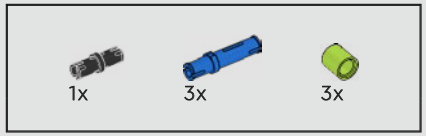

239

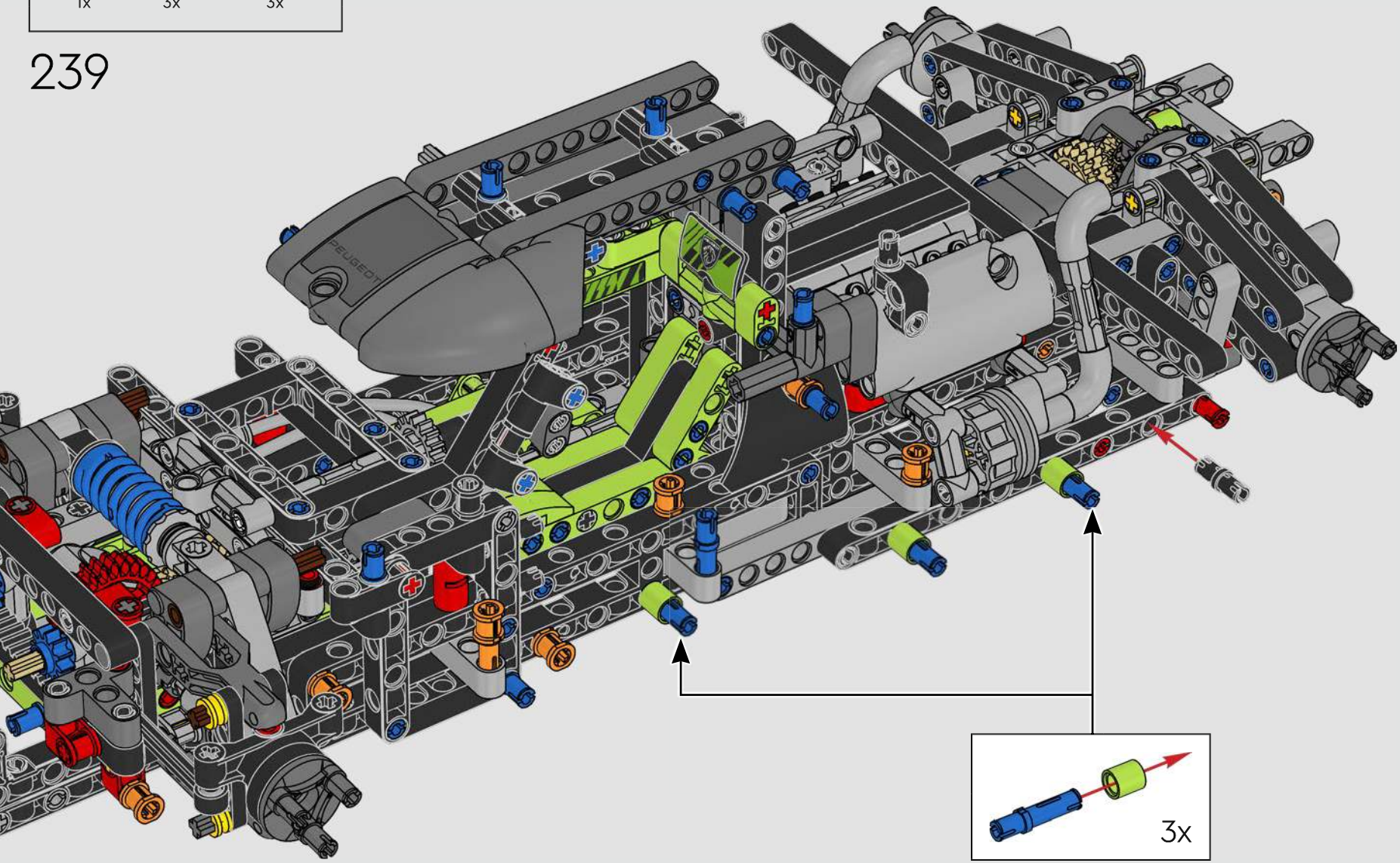

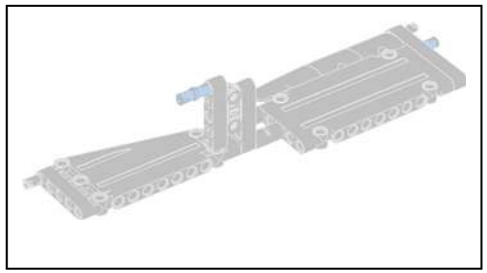

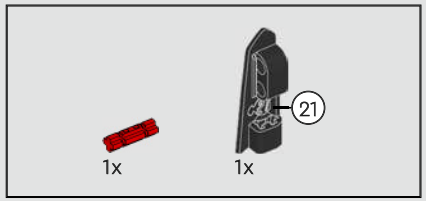

240

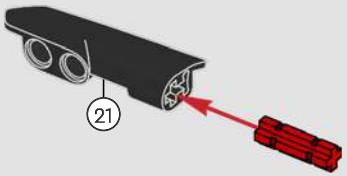

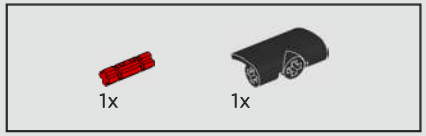

241

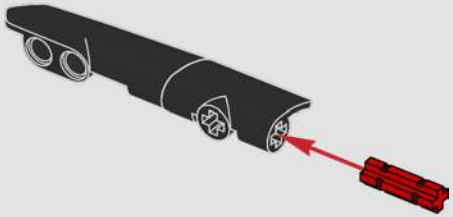

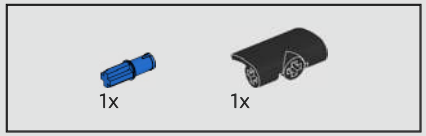

242

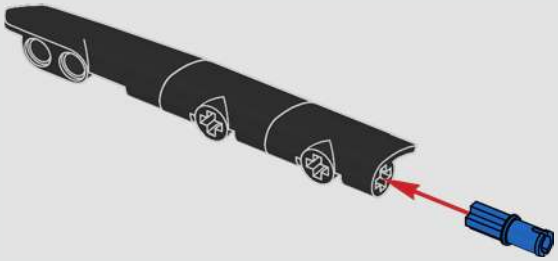

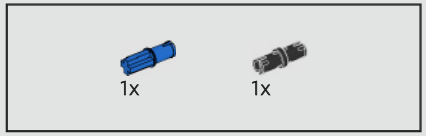

243

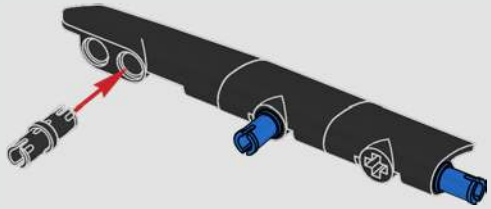

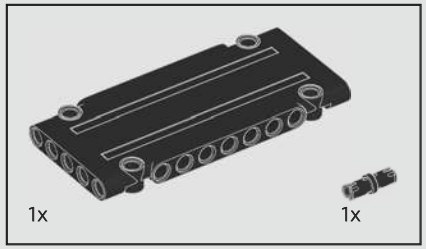

244

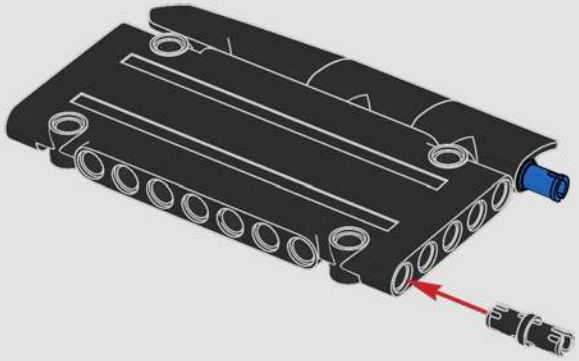

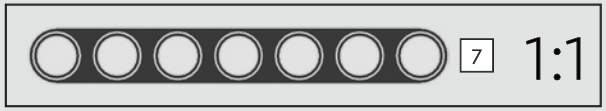

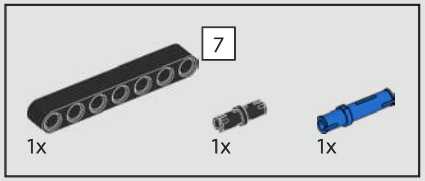

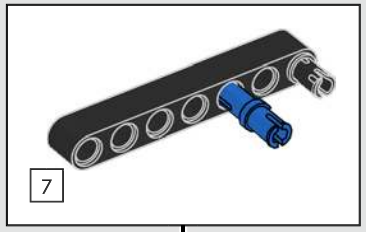

245

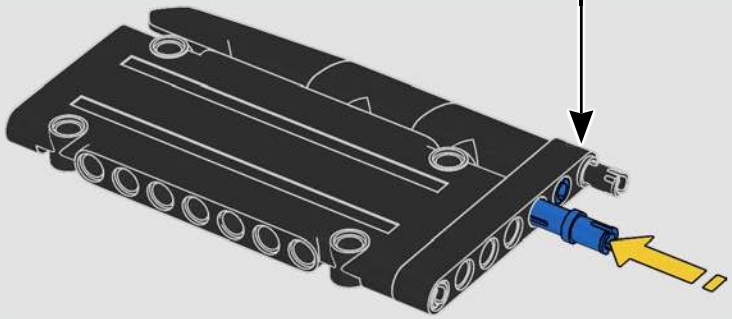

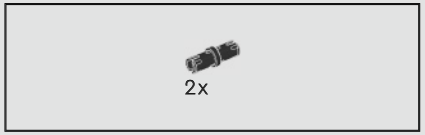

246

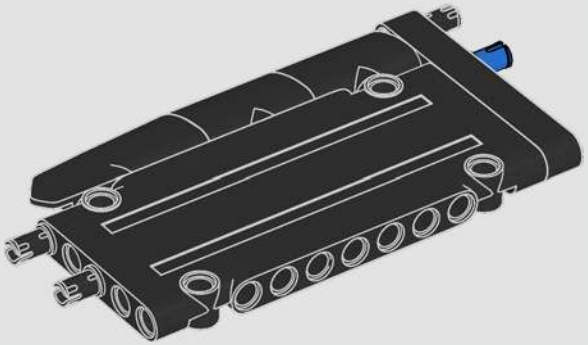

247

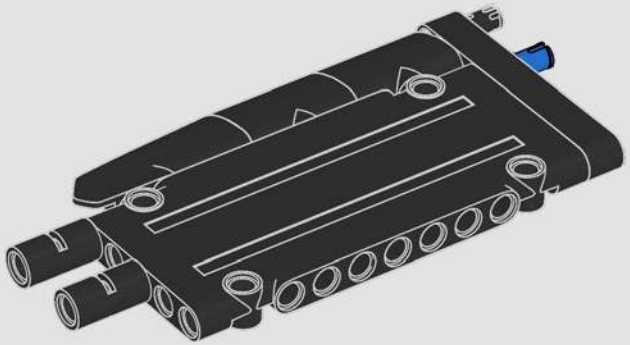

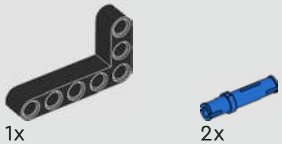

248

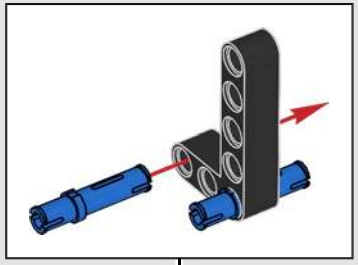

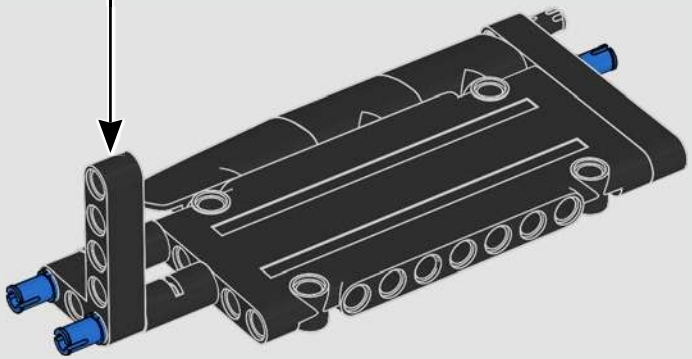

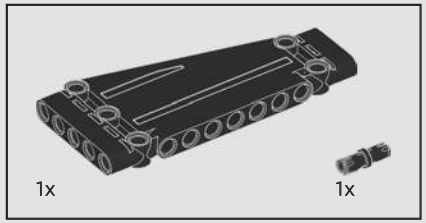

249

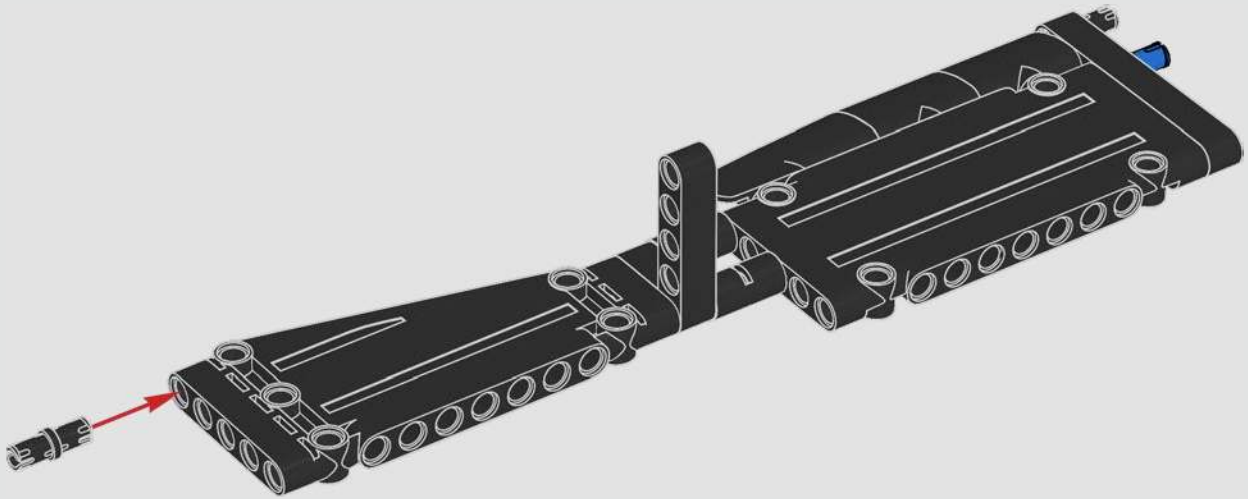

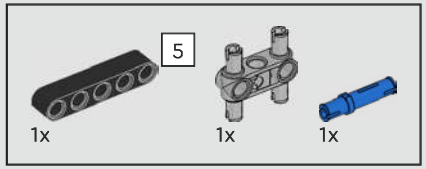

250

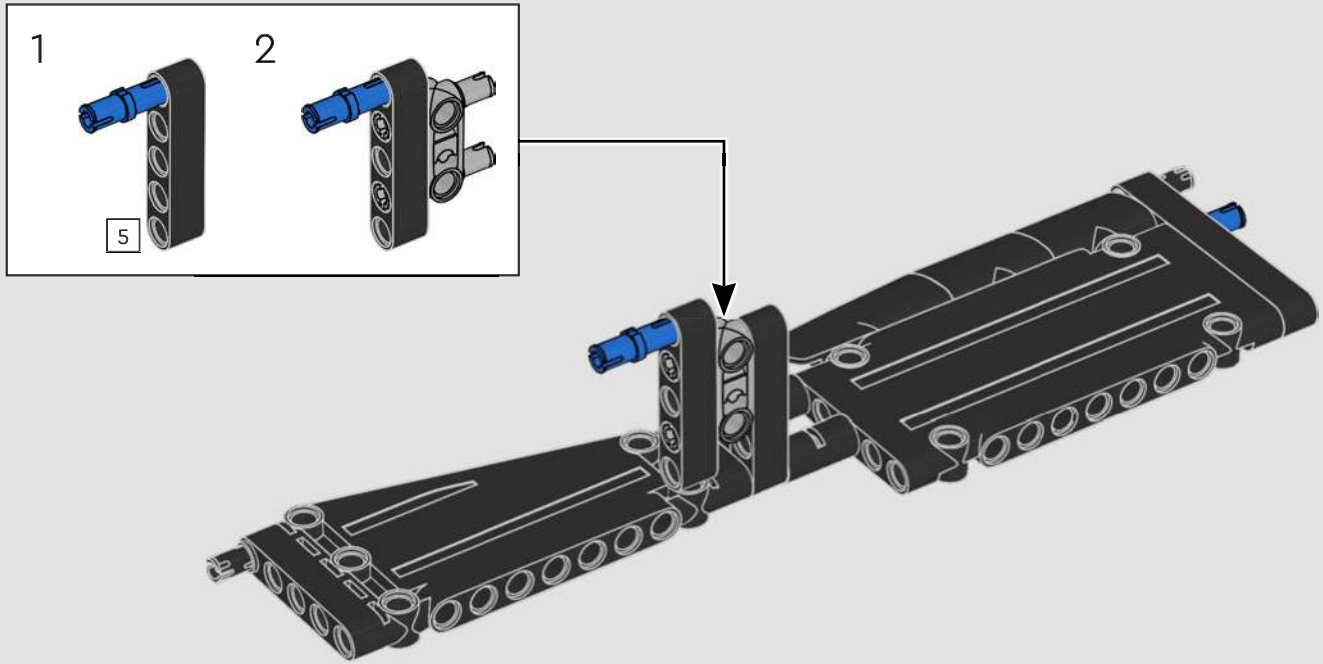

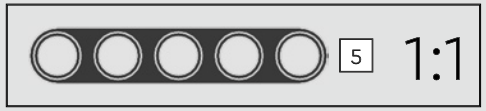

251

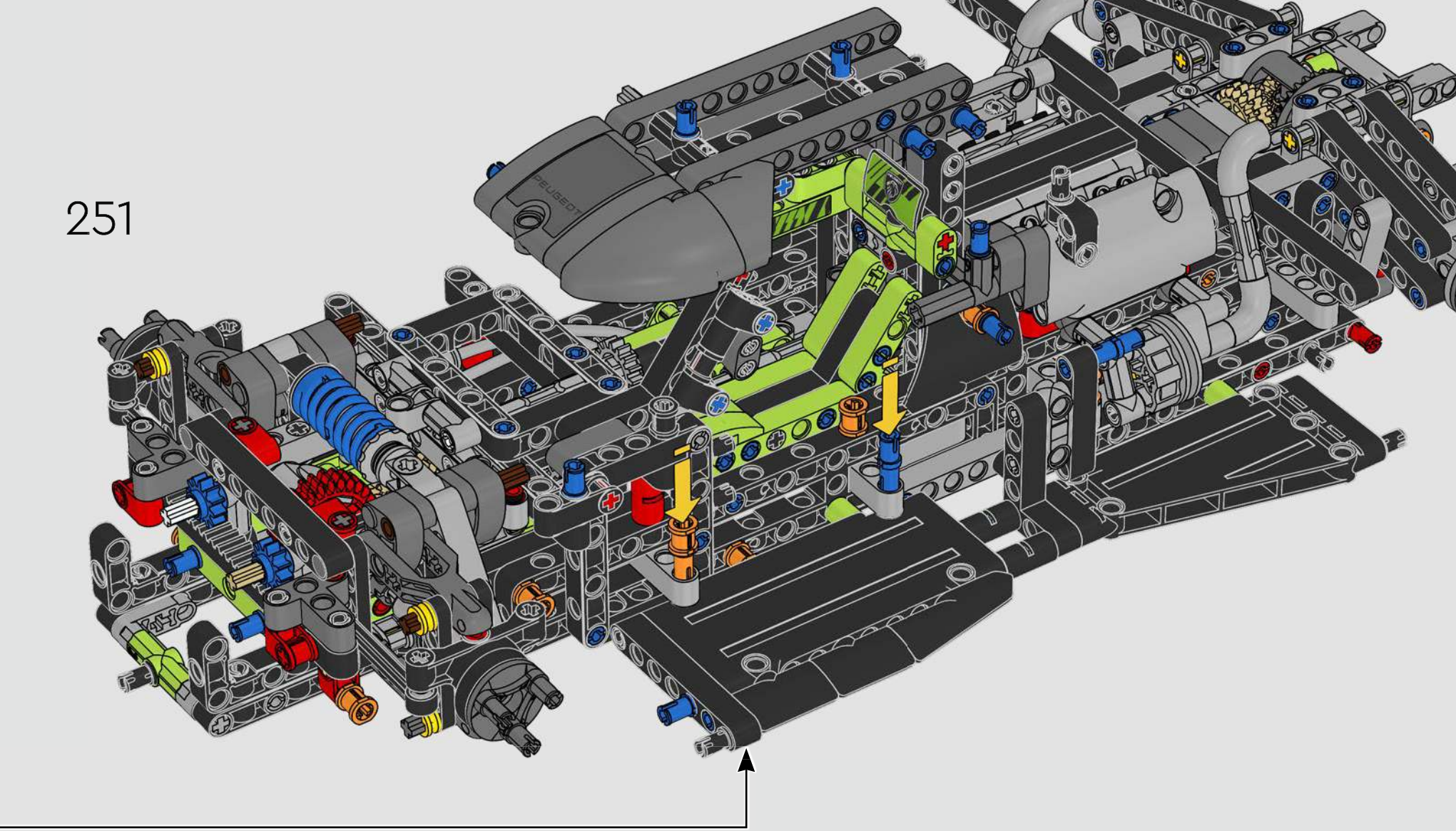

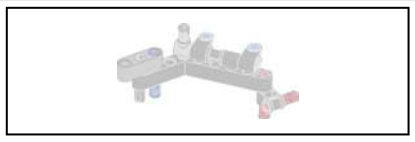

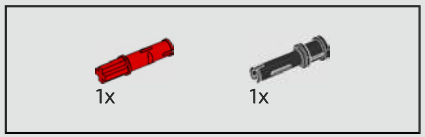

252

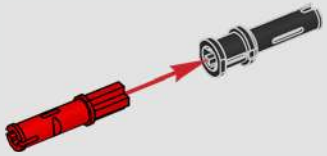

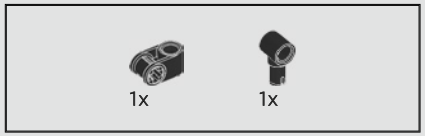

253

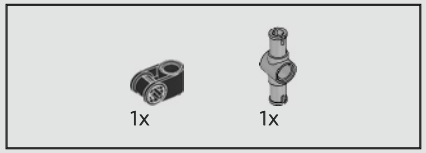

254

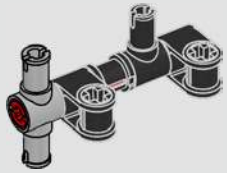

255

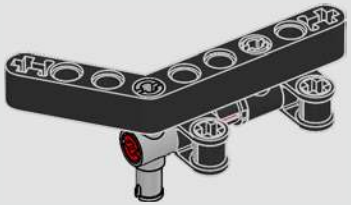

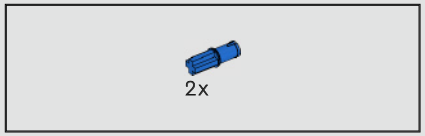

256

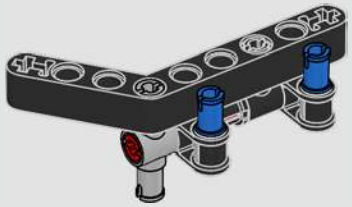

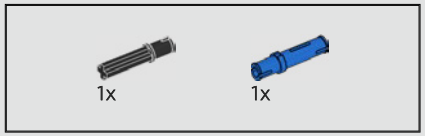

257

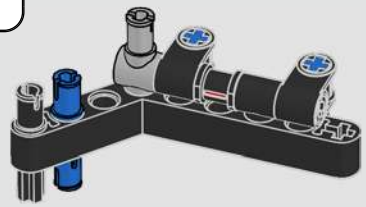

258

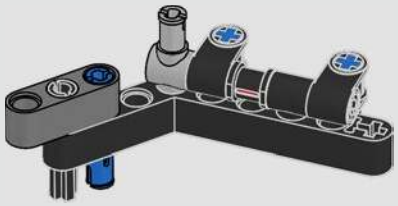

259

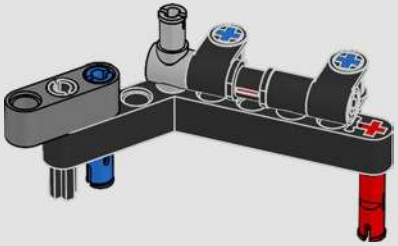

260

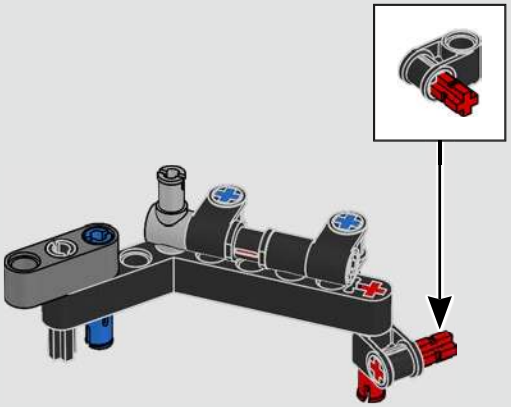

261

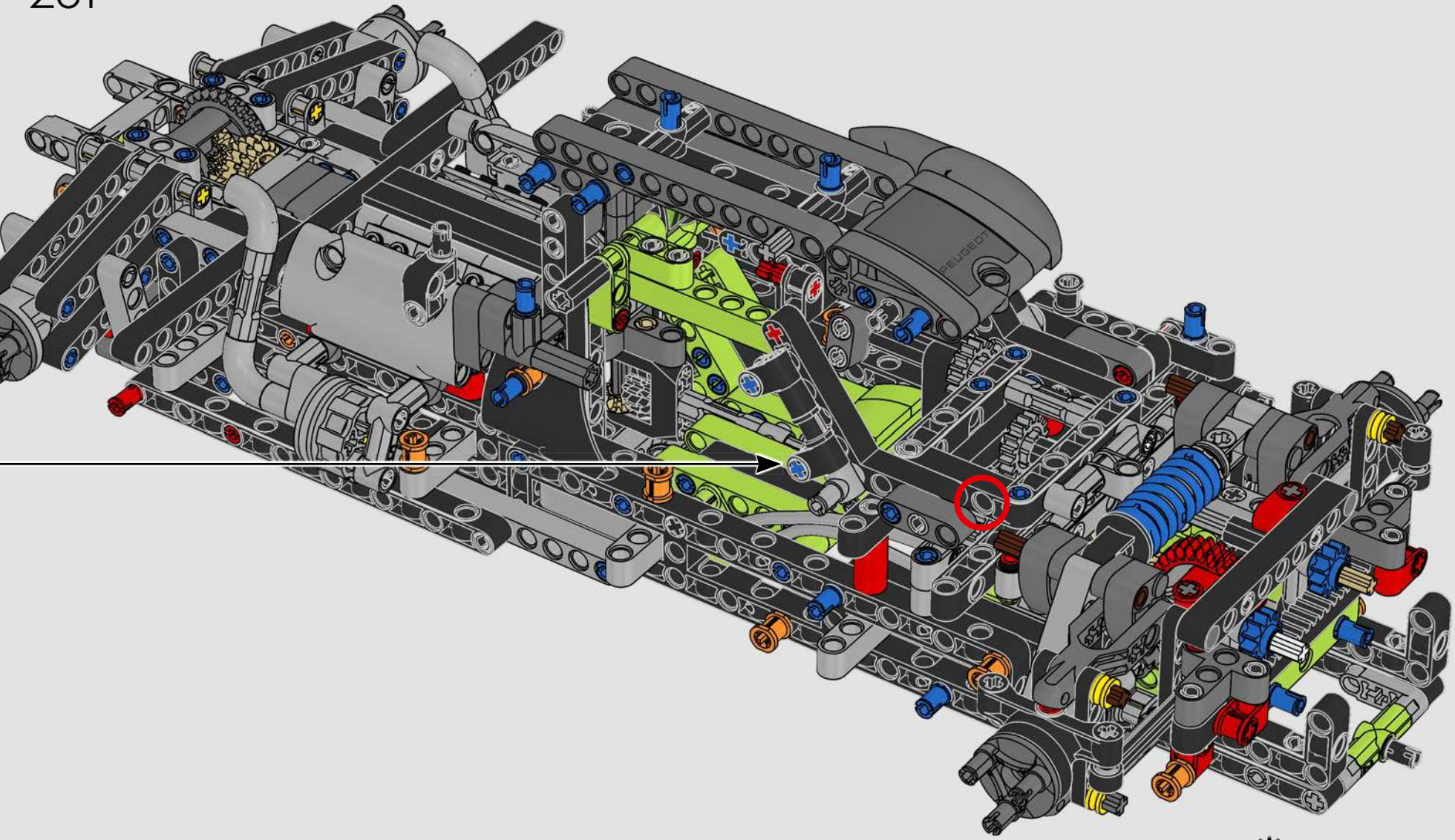

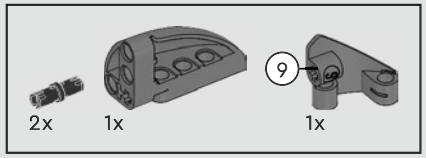

262

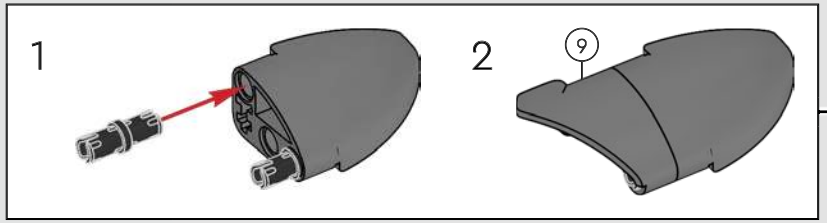

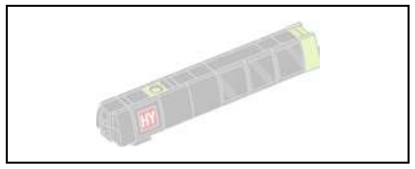

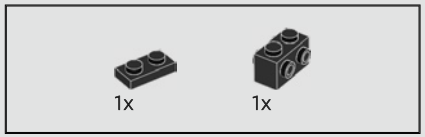

263

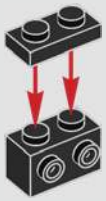

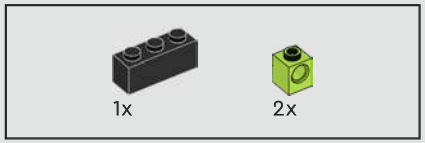

264

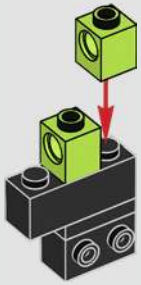

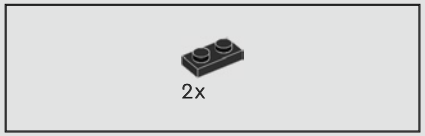

265

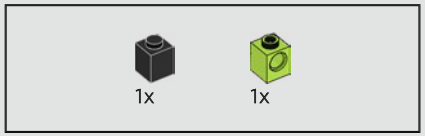

266

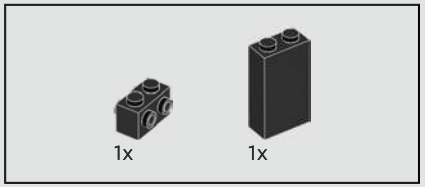

267

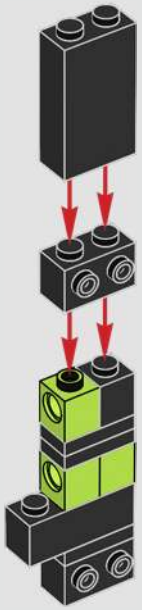

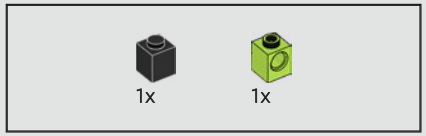

268

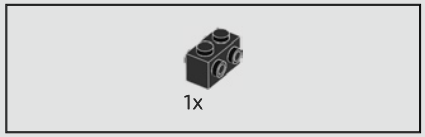

269

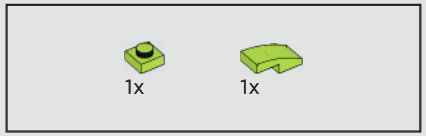

270

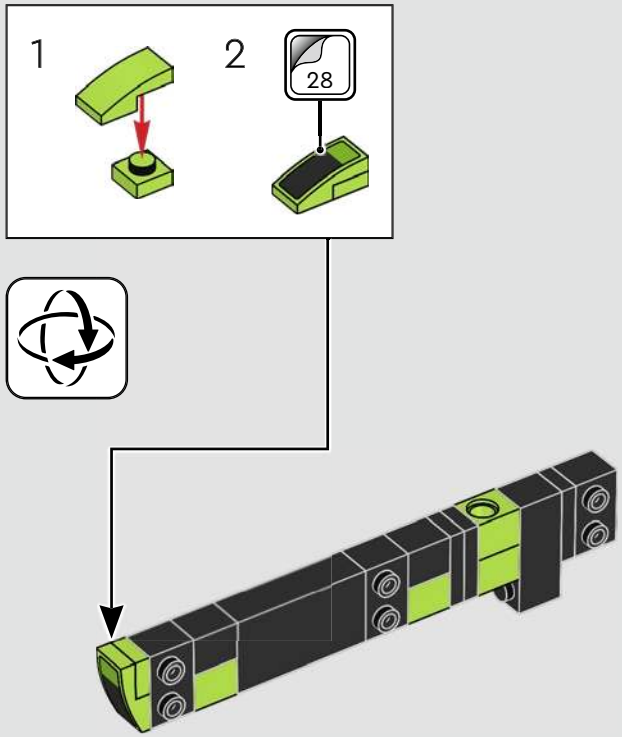

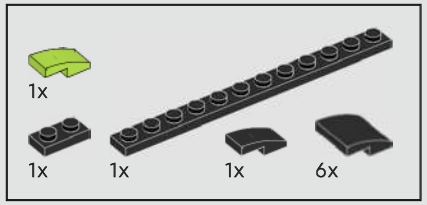

271

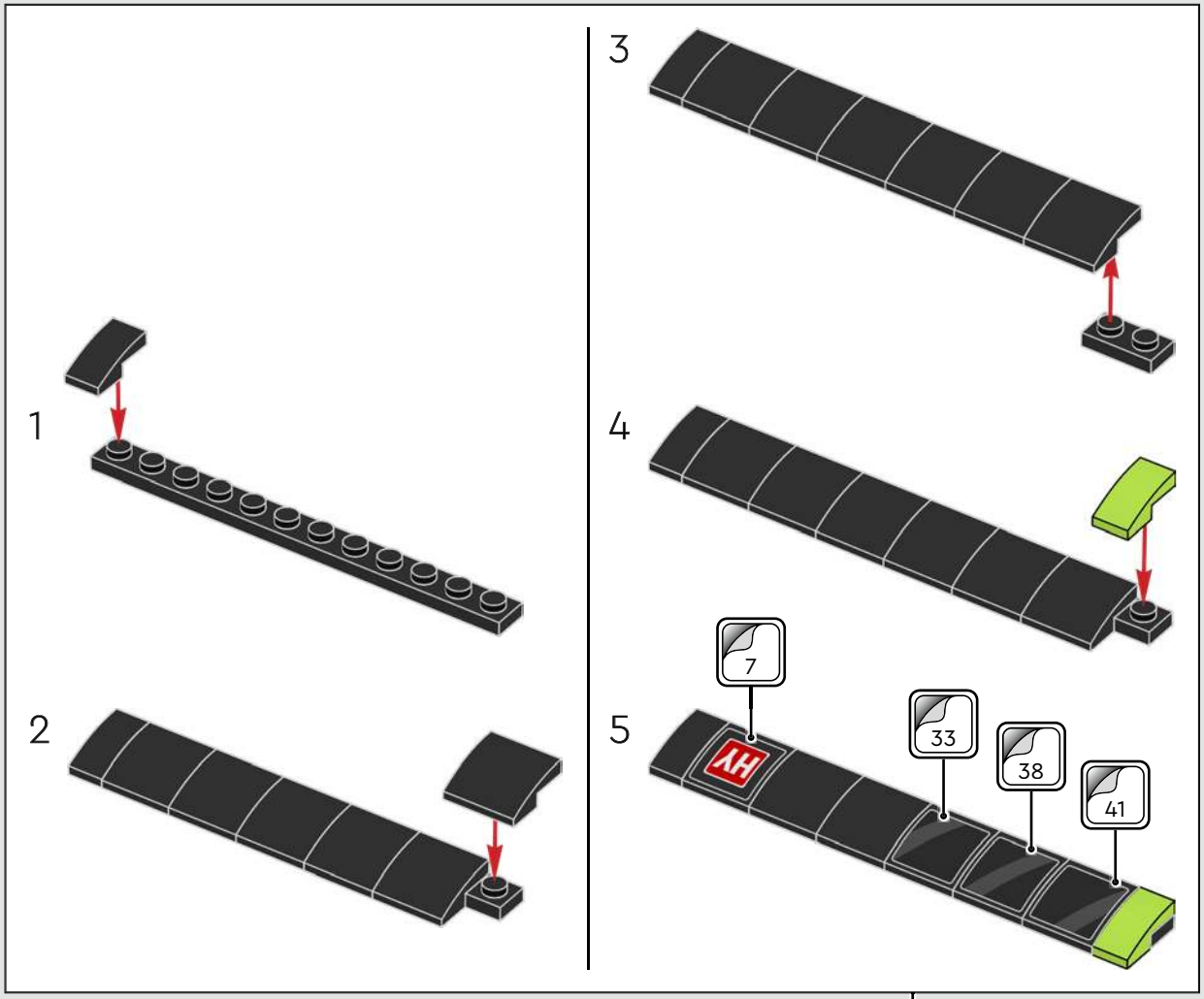

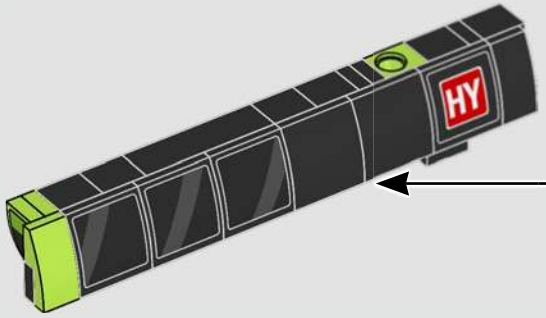

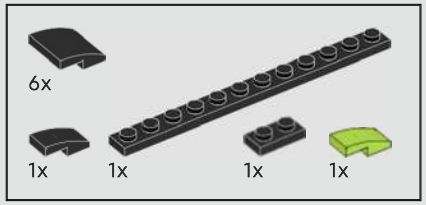

272

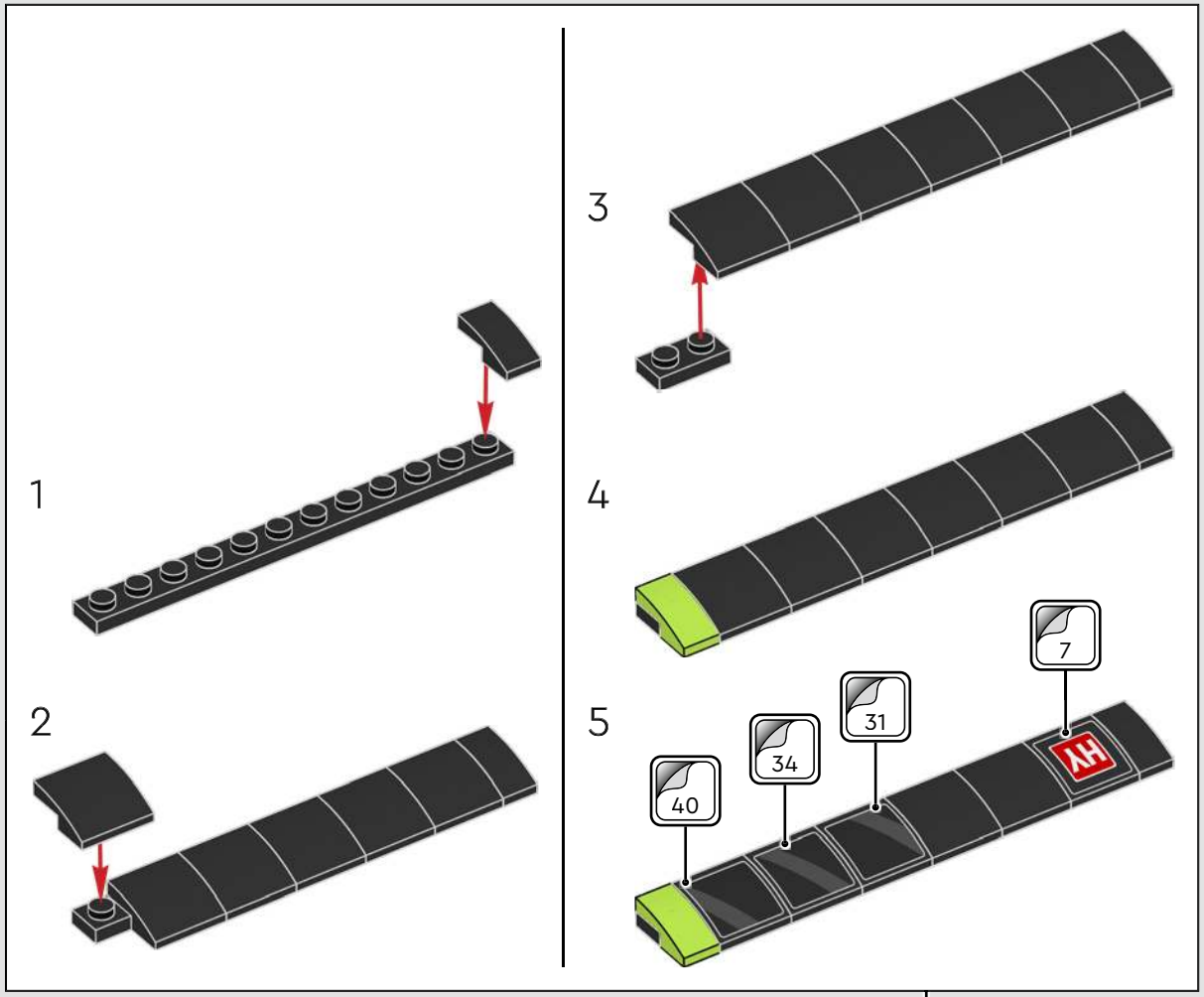

273

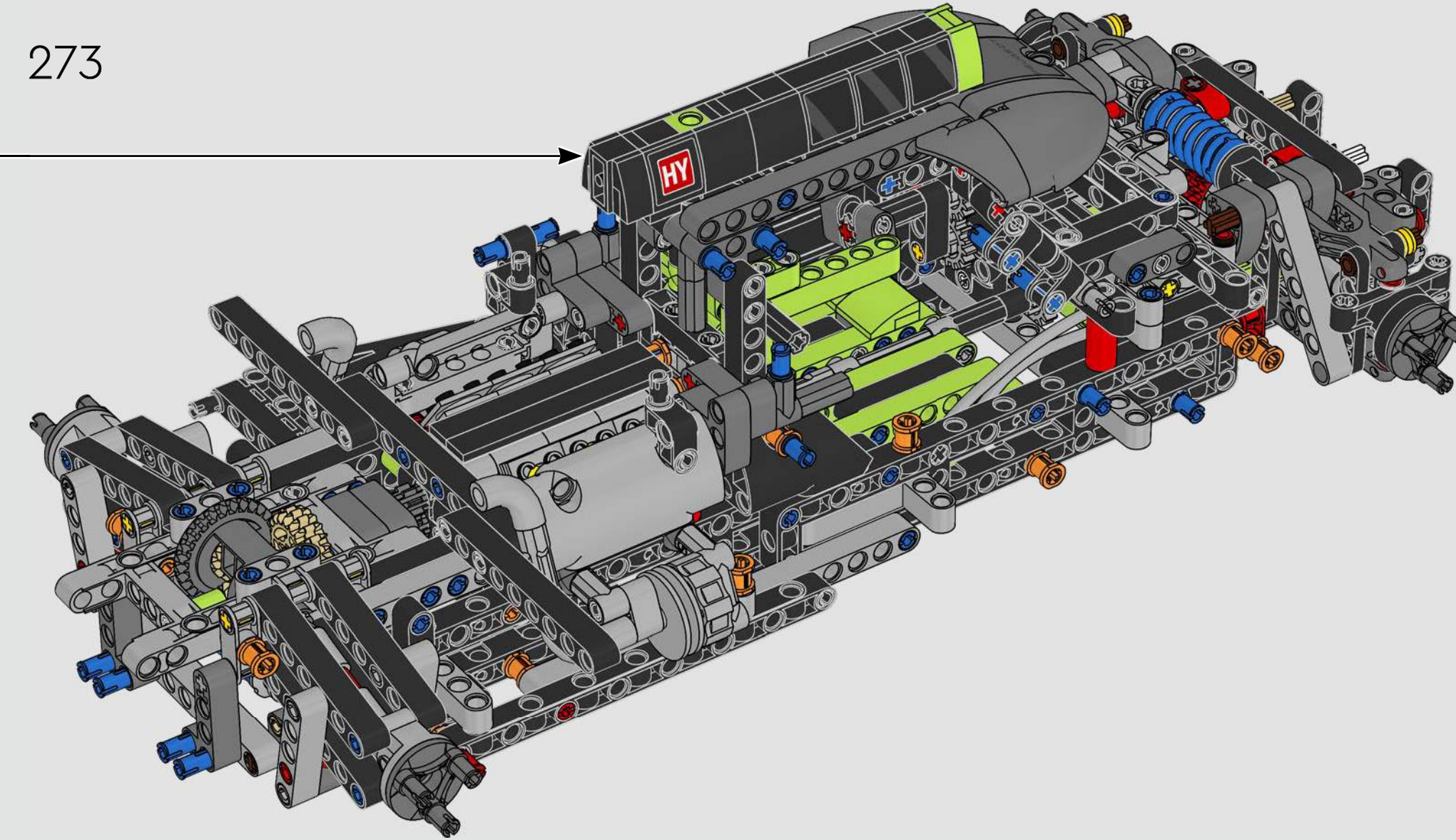

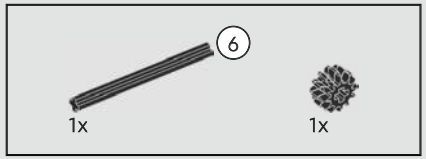

274

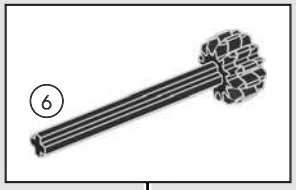

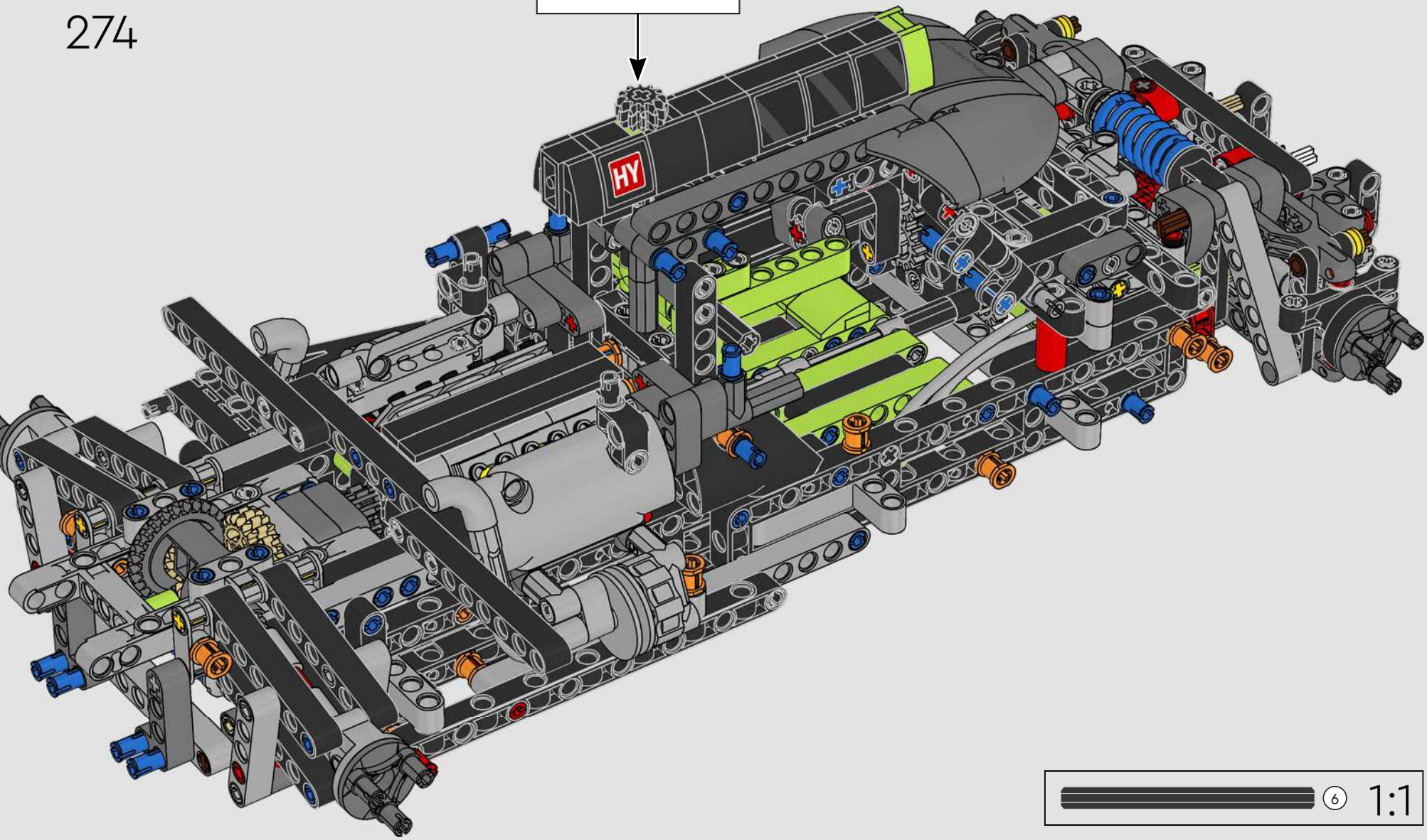

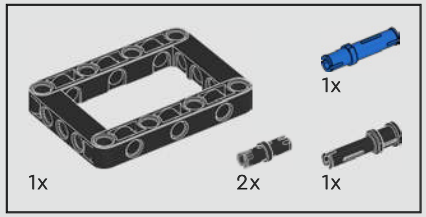

275

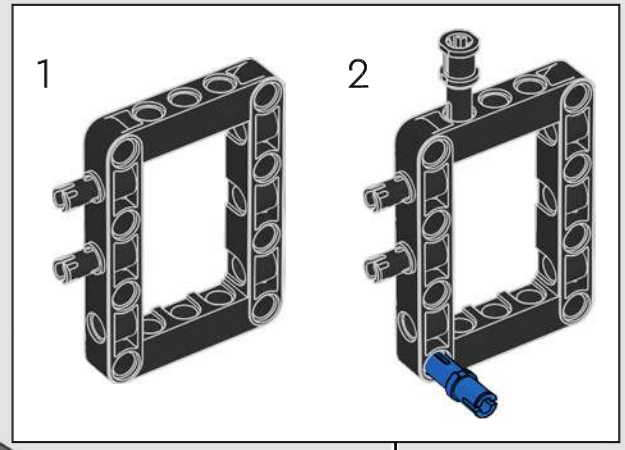

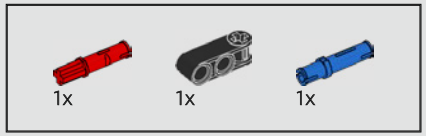

276

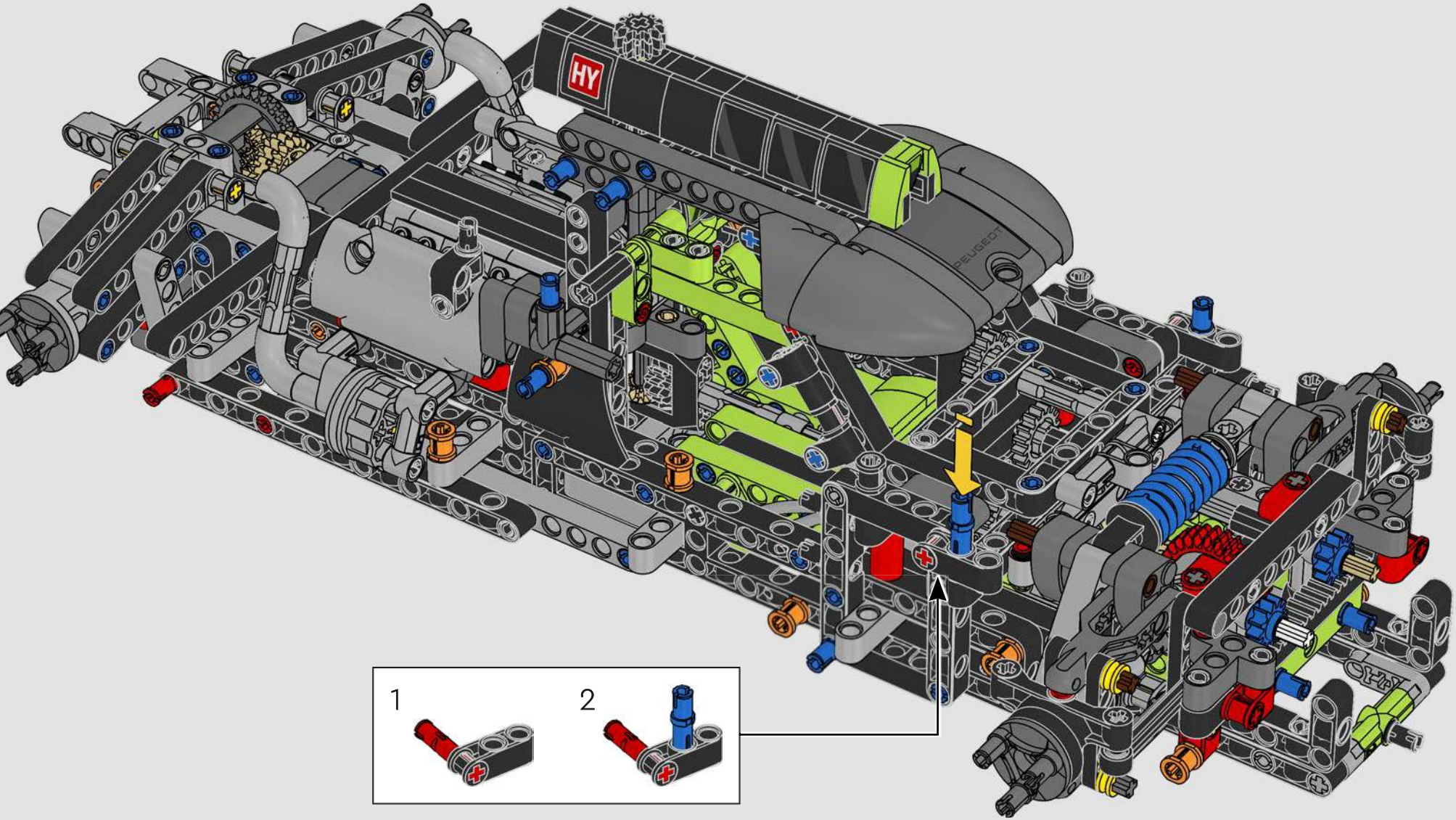

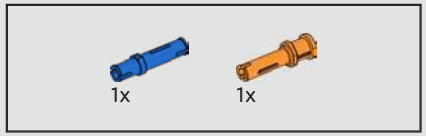

277

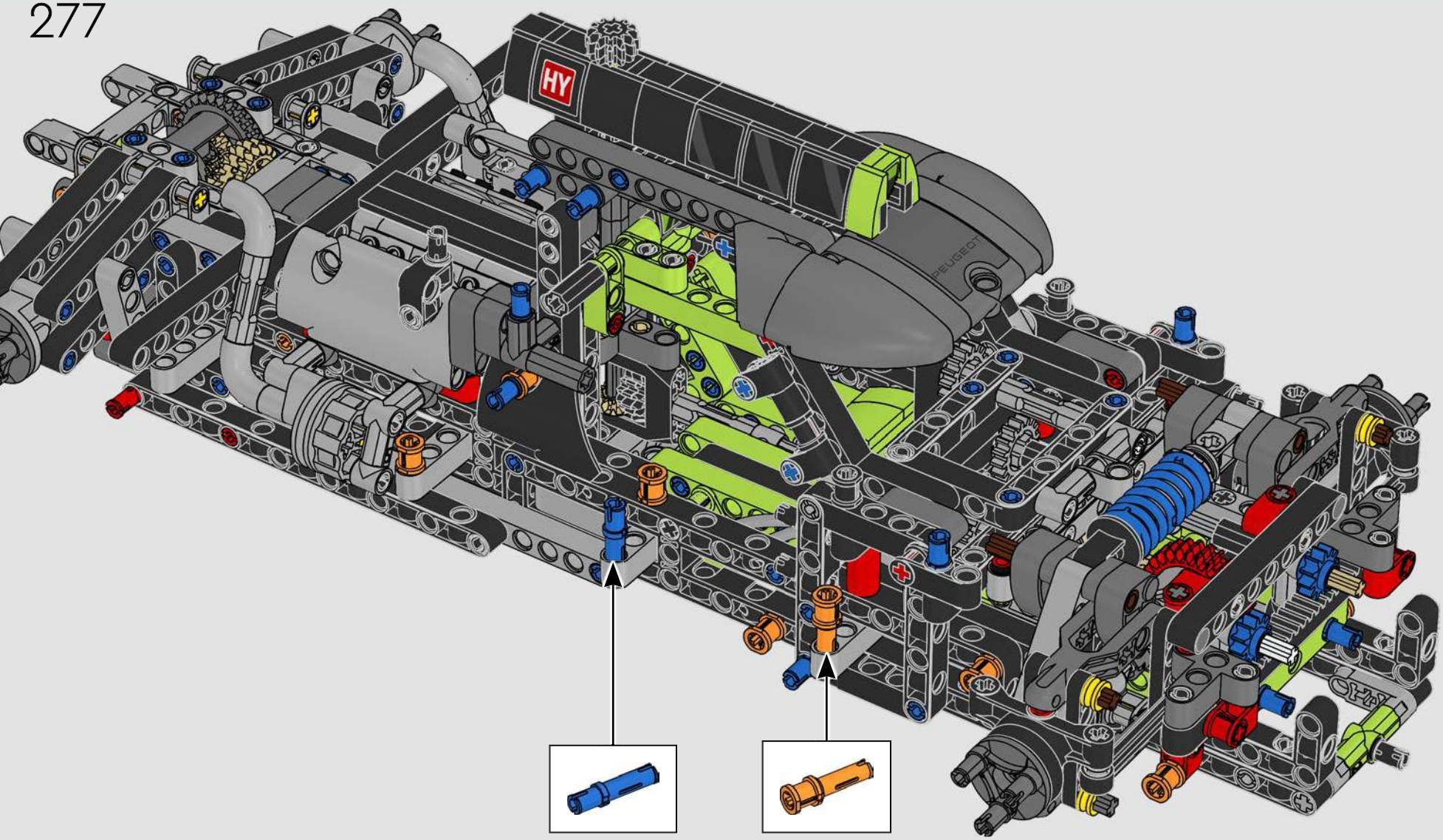

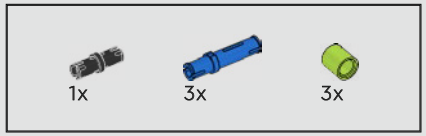

278

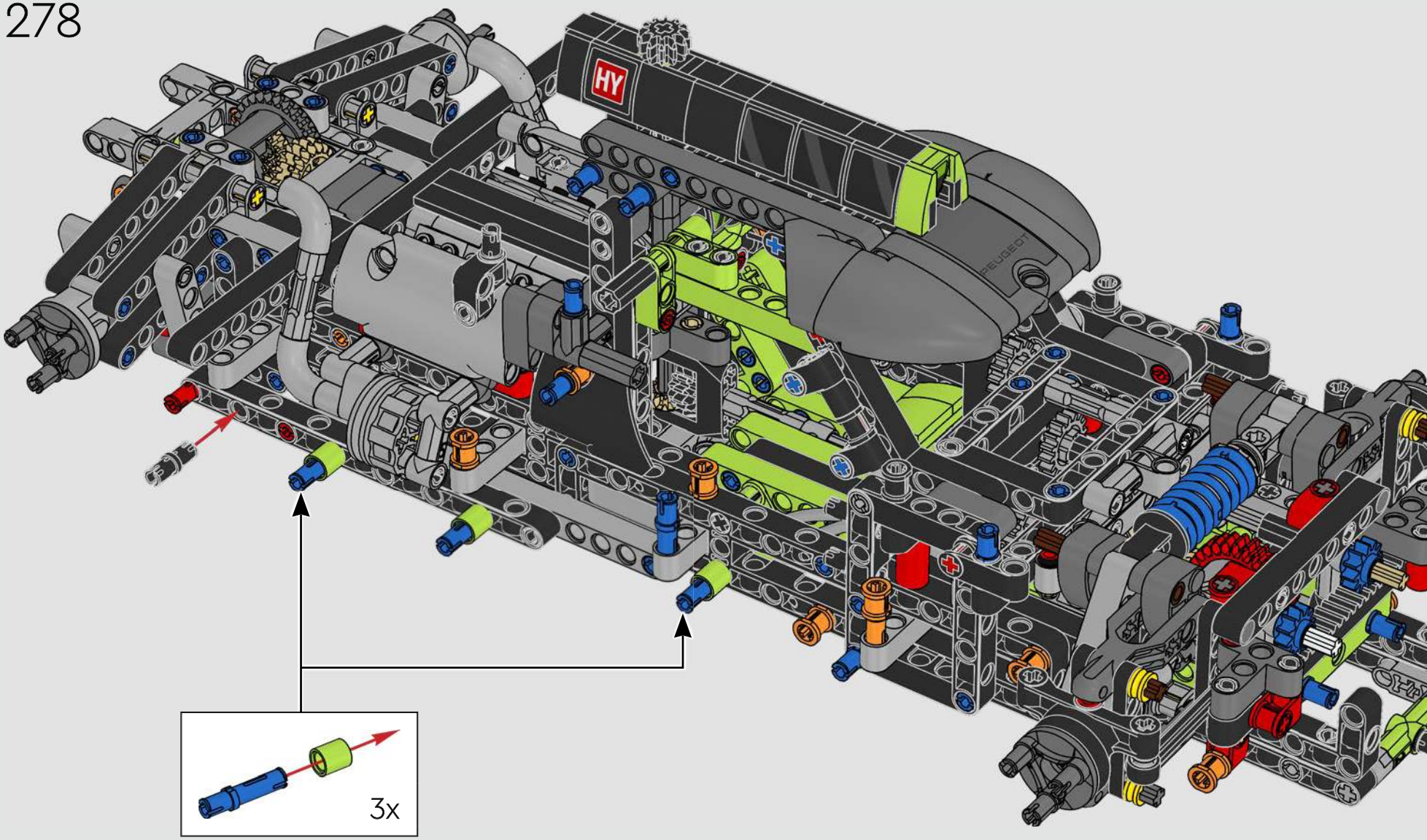

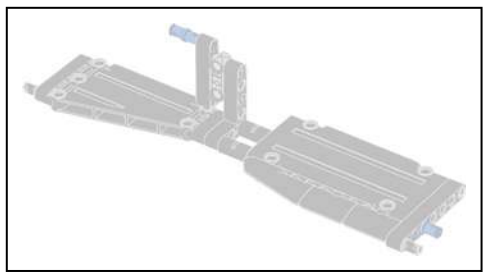

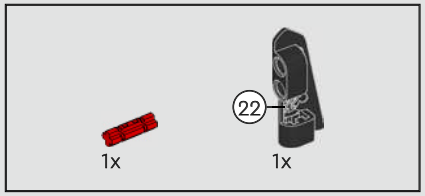

279

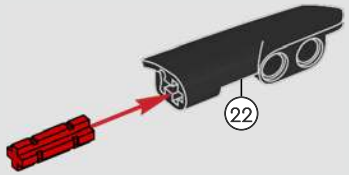

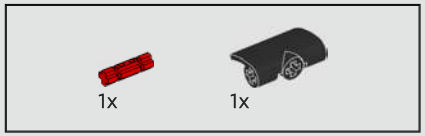

280

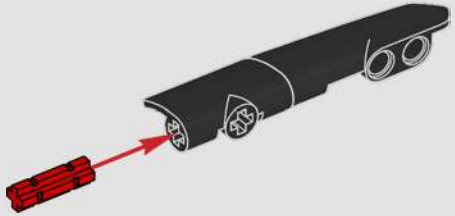

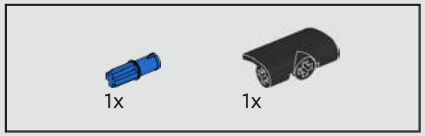

281

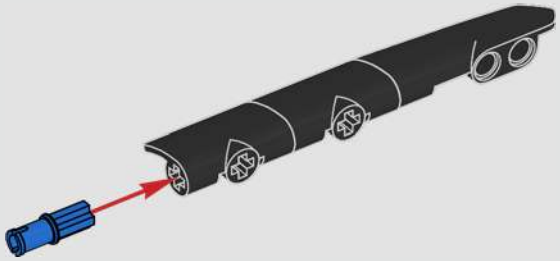

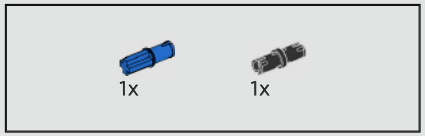

282

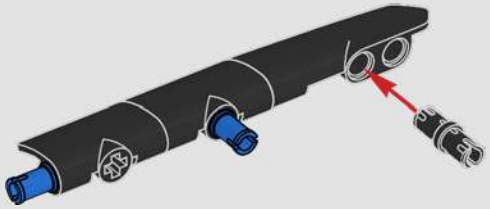

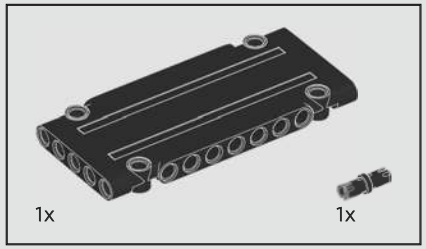

283

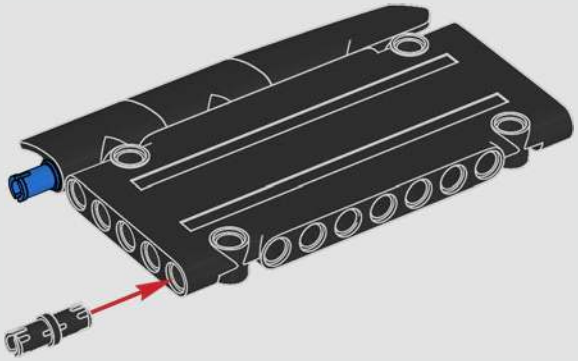

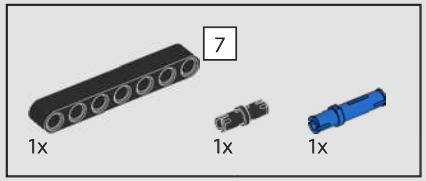

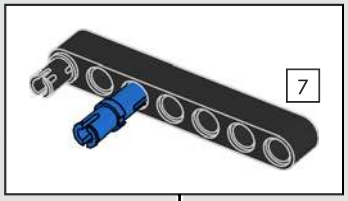

284

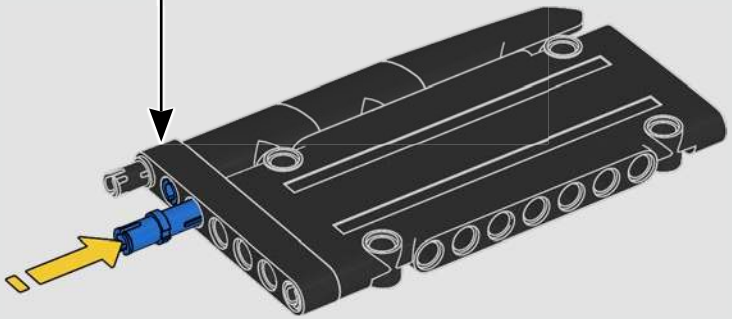

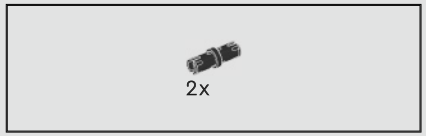

285

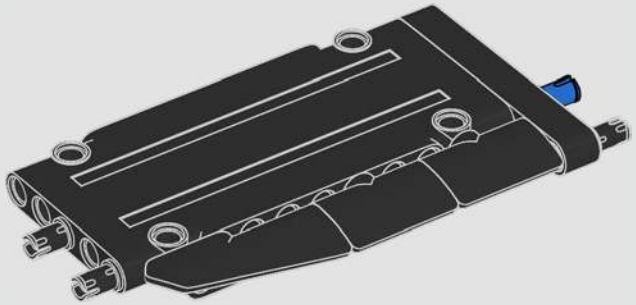

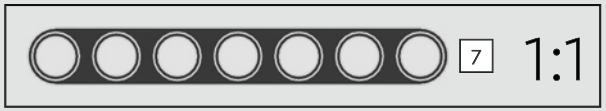

286

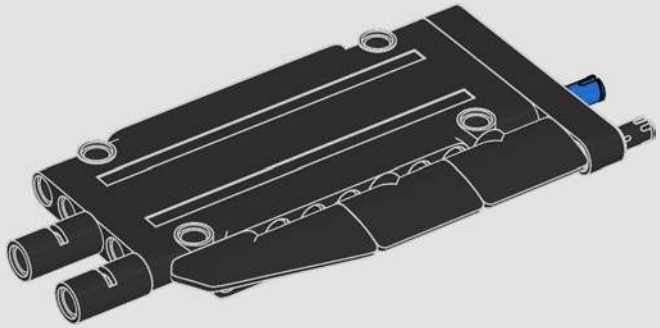

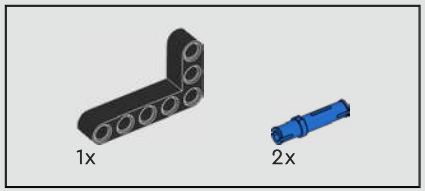

287

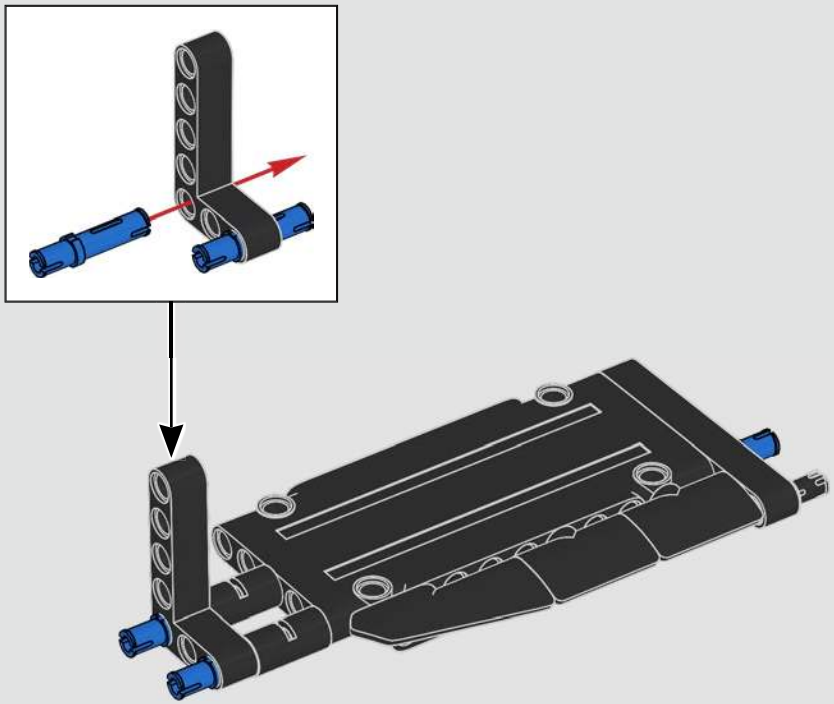

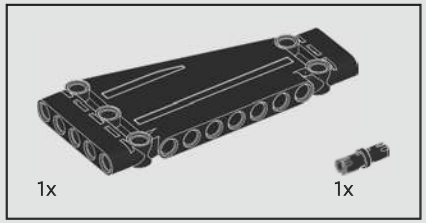

288

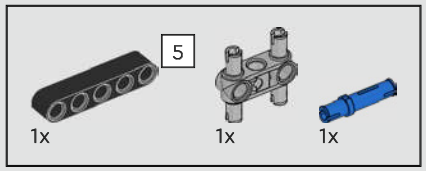

289

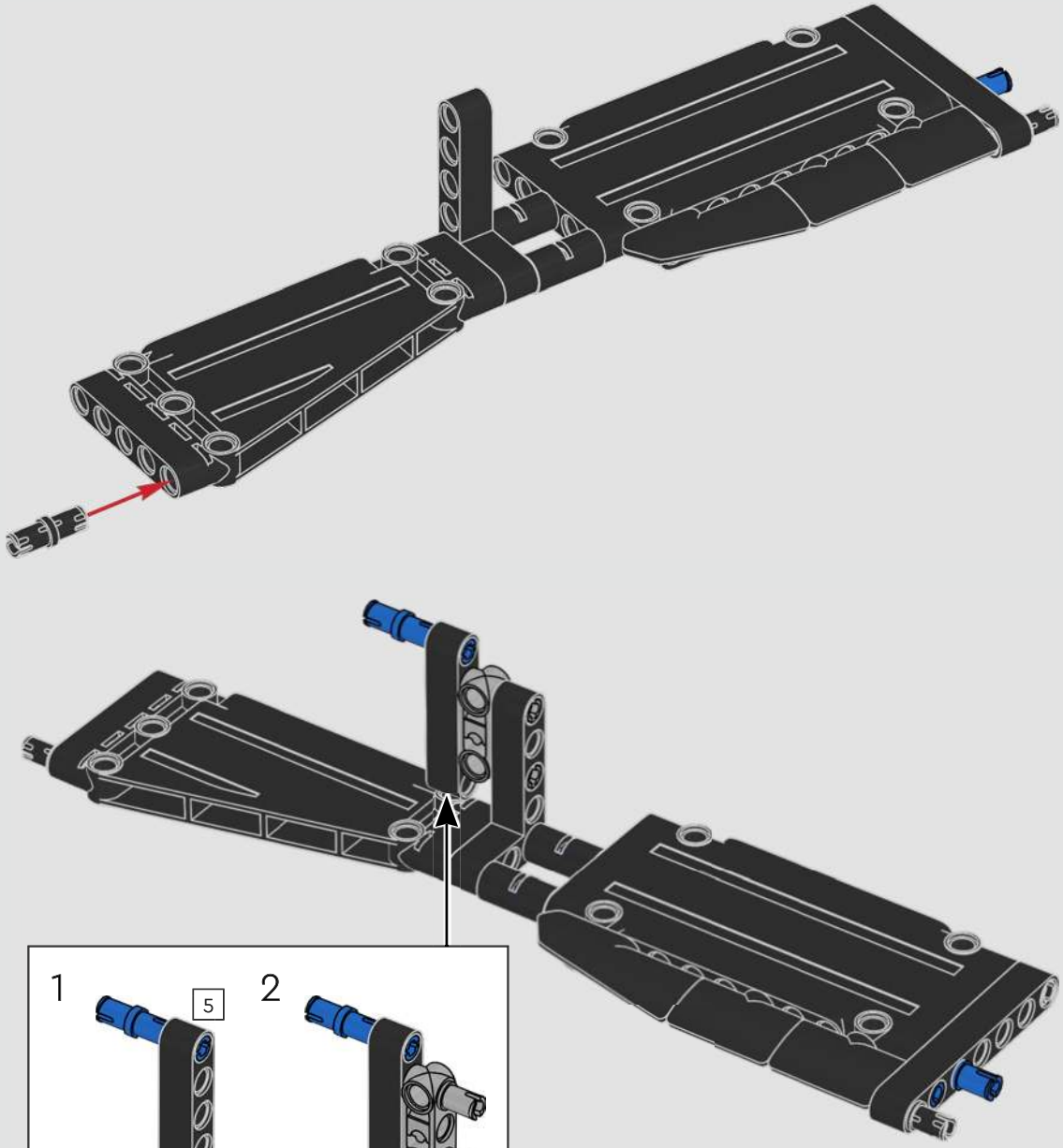

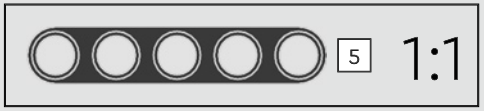

290

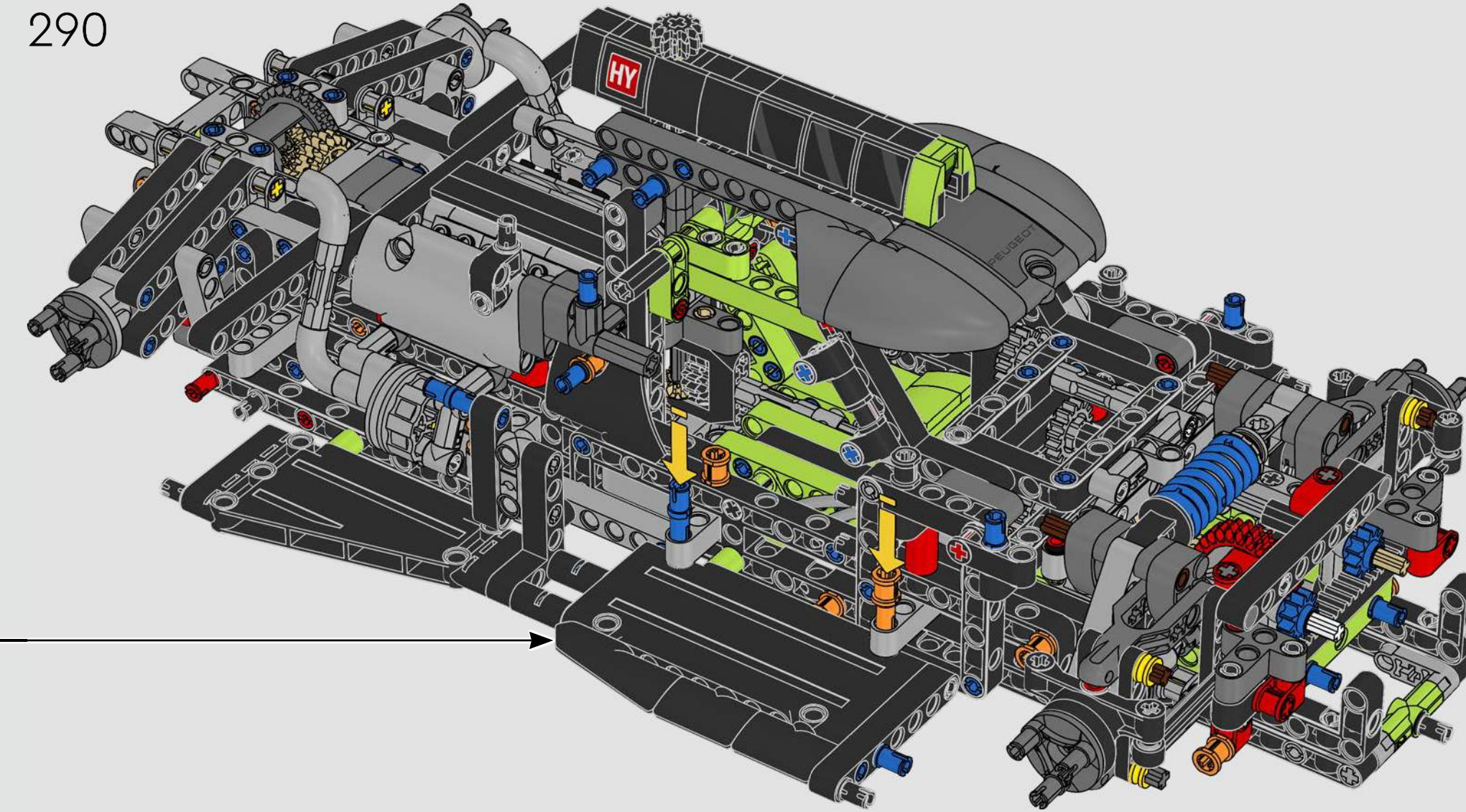

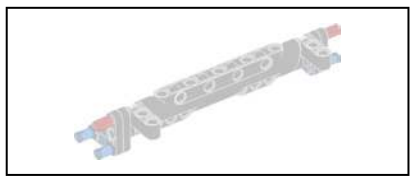

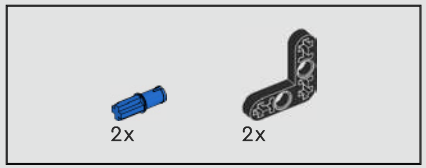

291

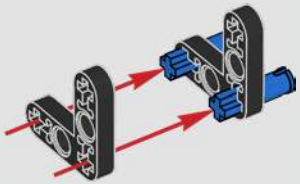

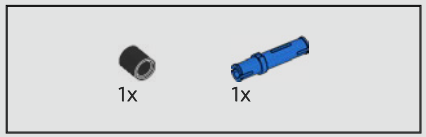

292

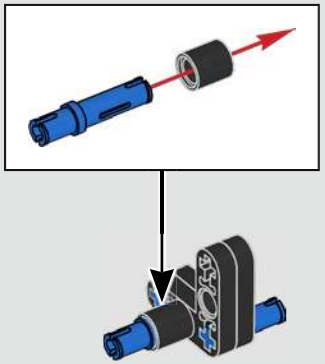

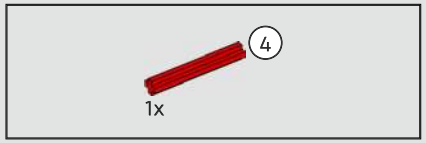

293

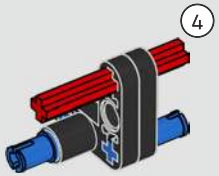

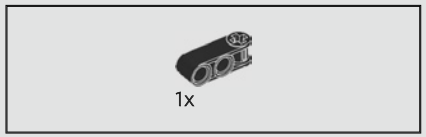

294

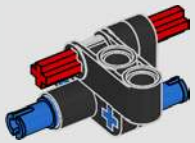

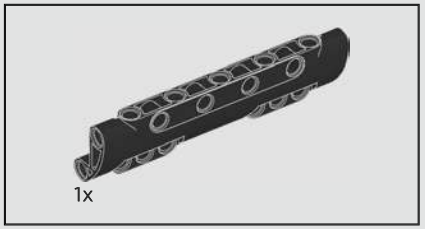

295

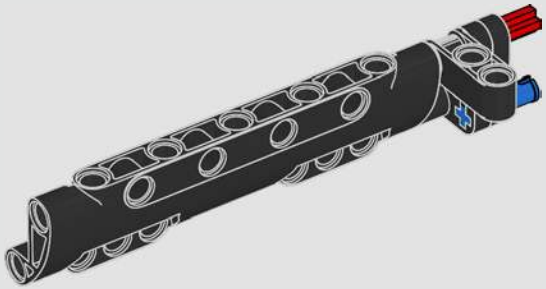

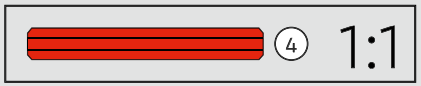

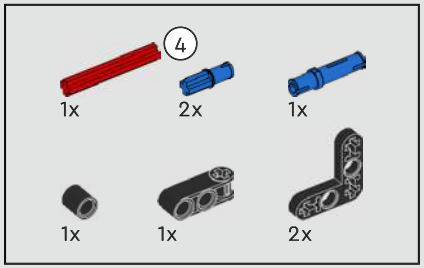

296

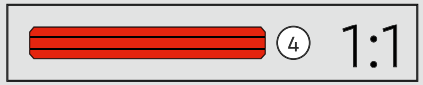

1

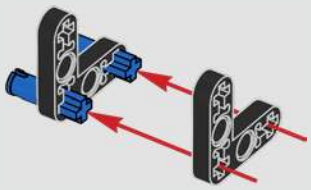

2

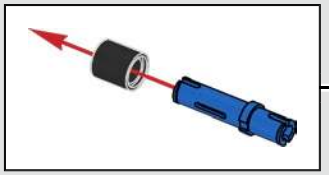

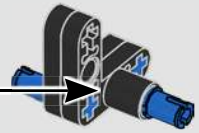

3

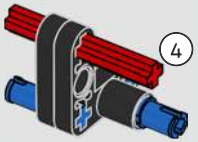

4

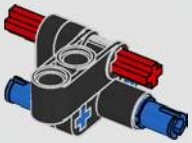

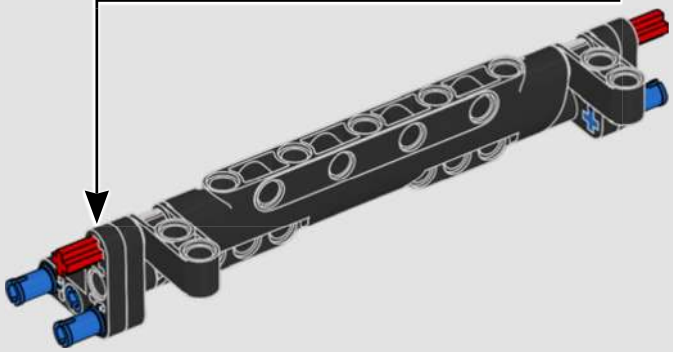

297

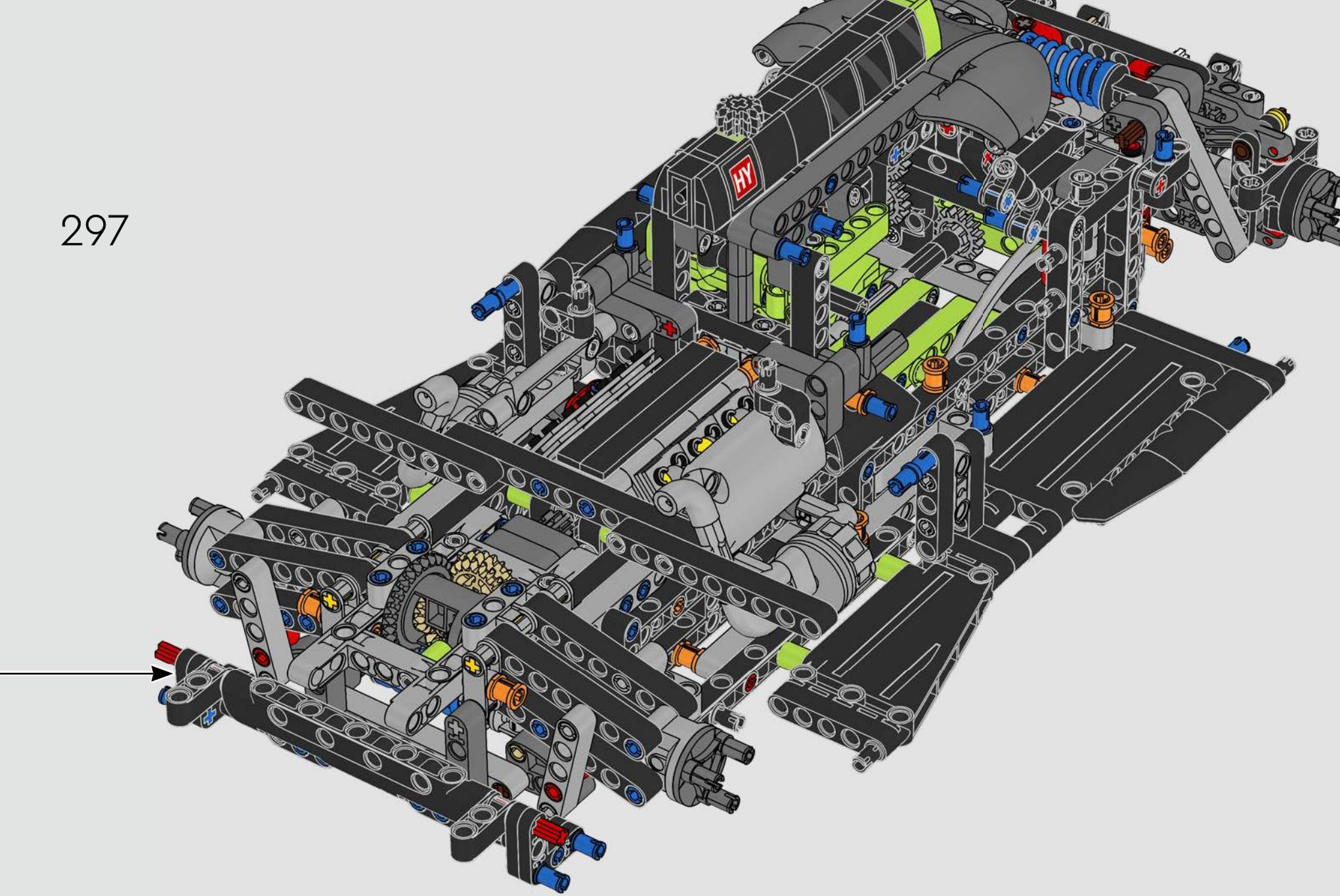

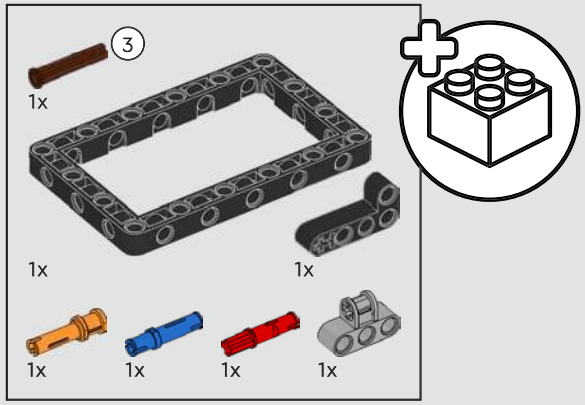

298

1

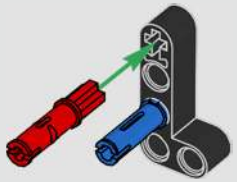

2

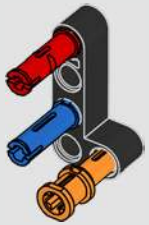

3

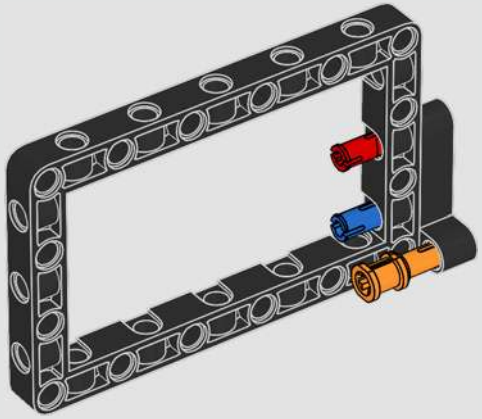

4

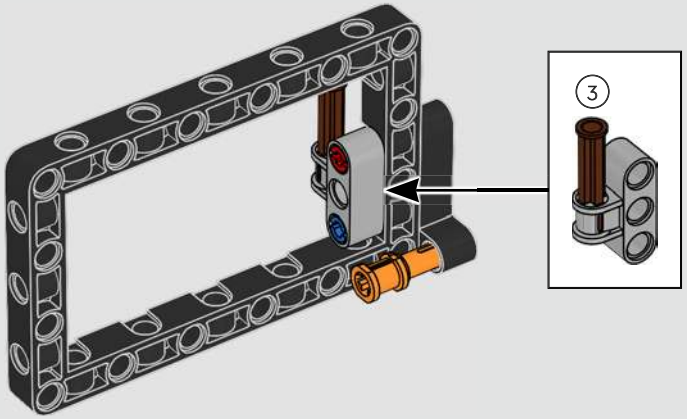

1:1

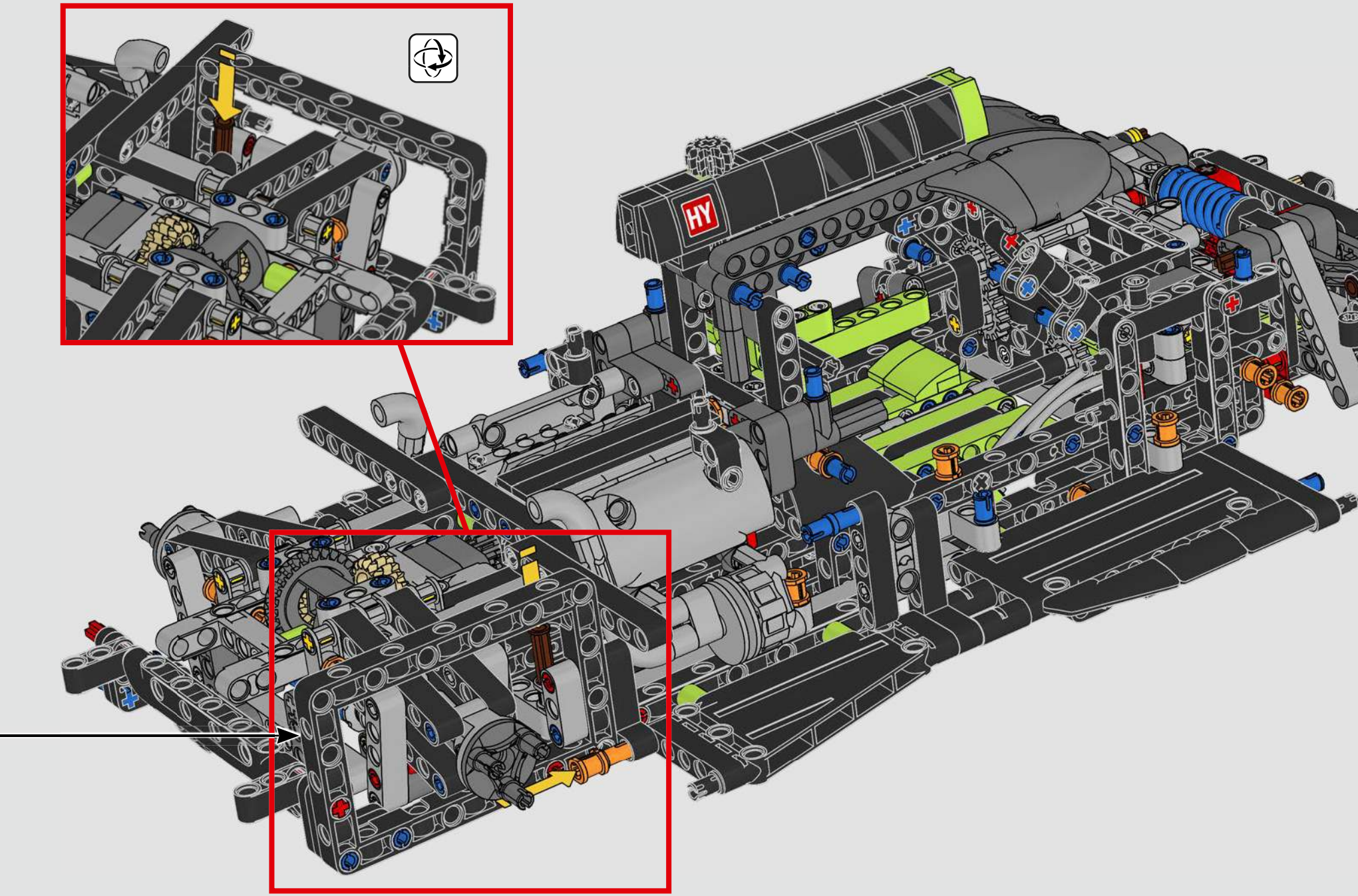
HY

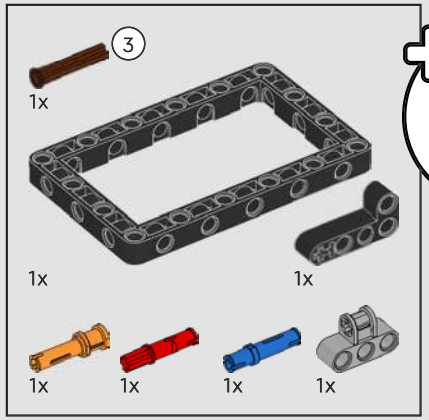

299

1

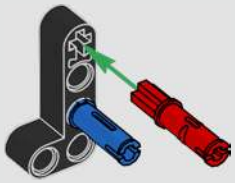

2

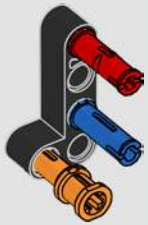

3

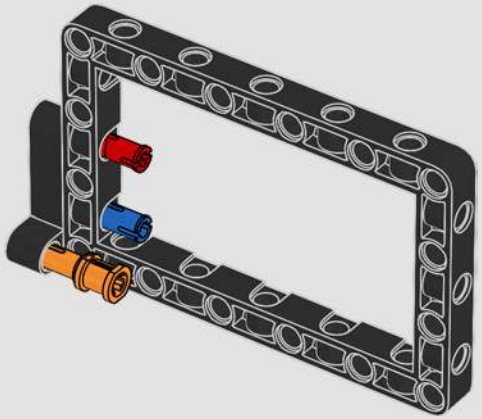

4

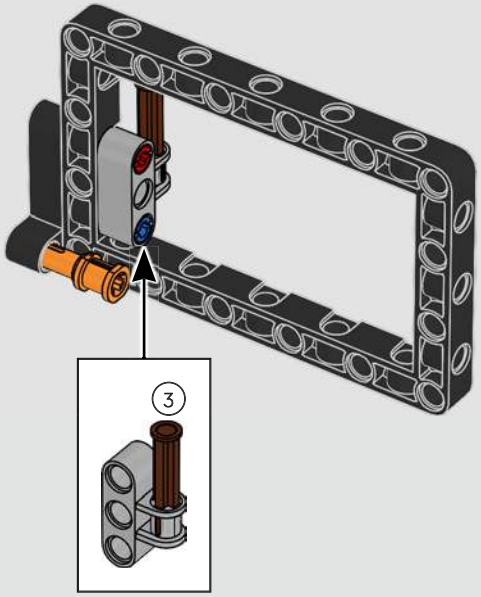

1:1

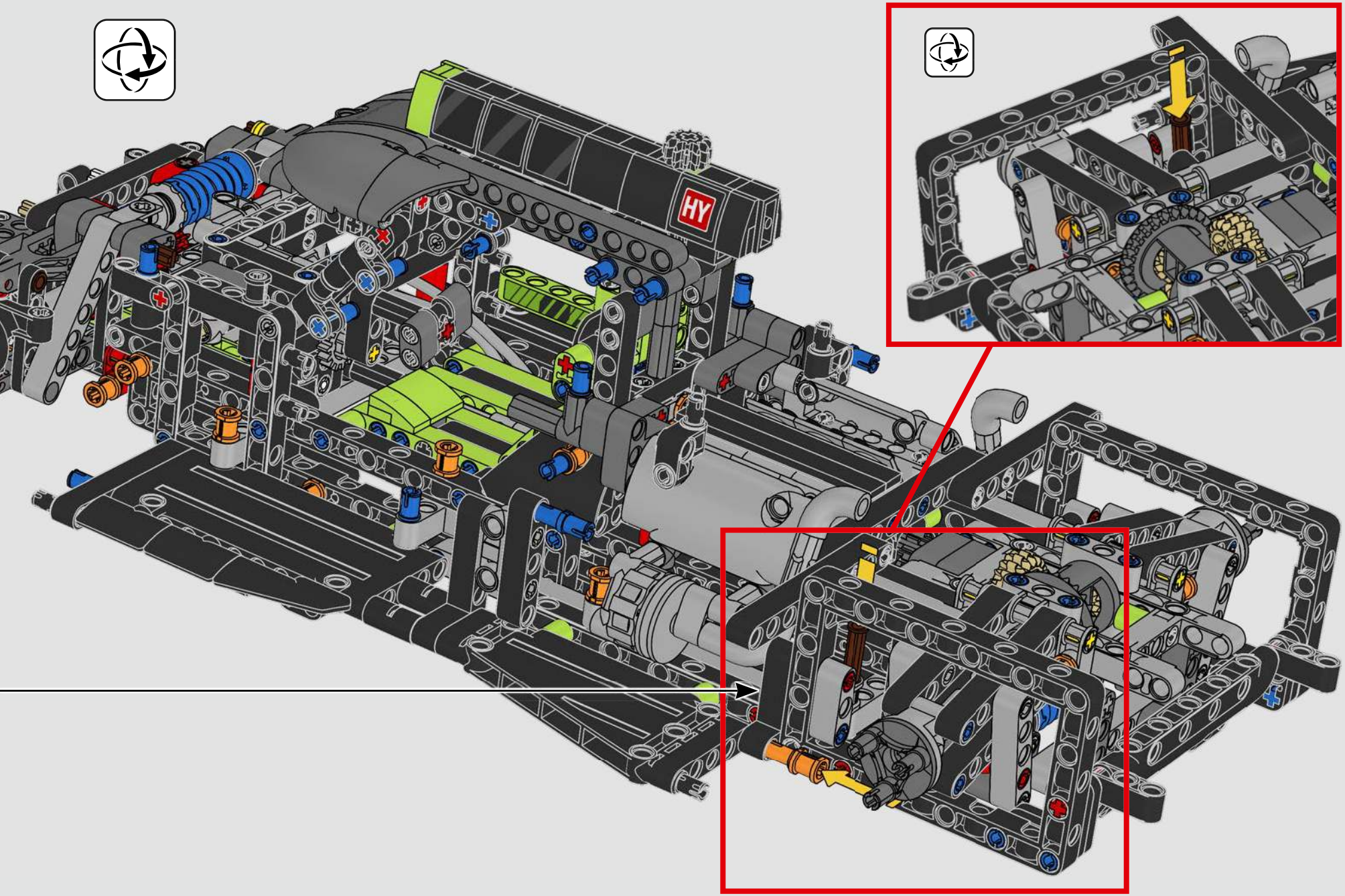
HY

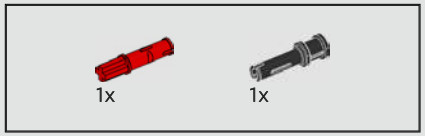

300

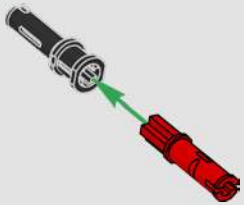

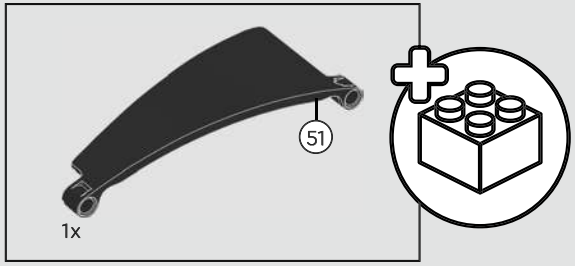

301

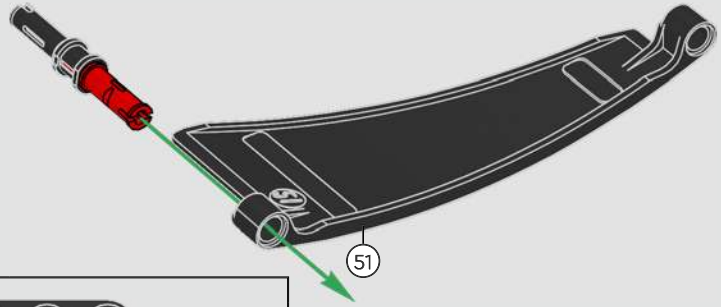

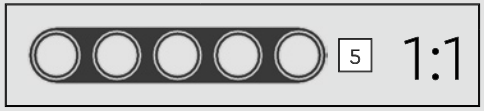

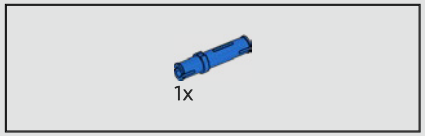

302

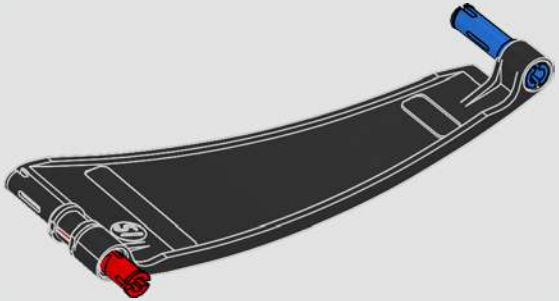

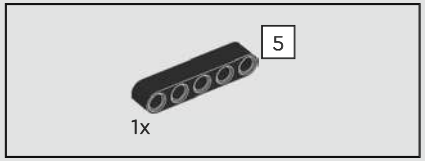

303

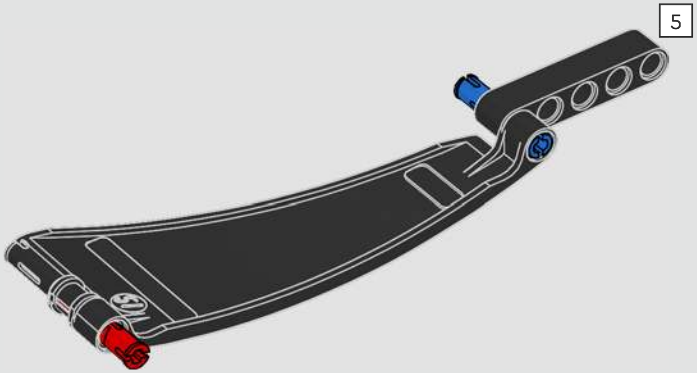

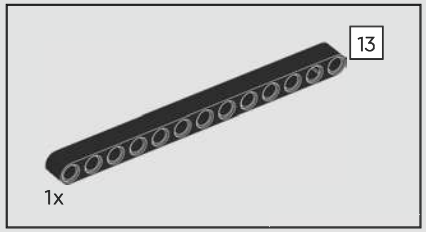

304

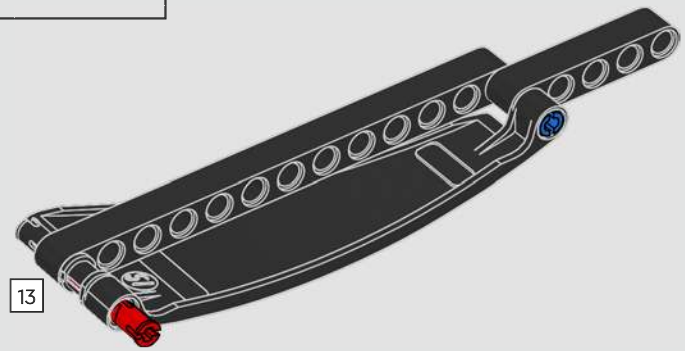

305

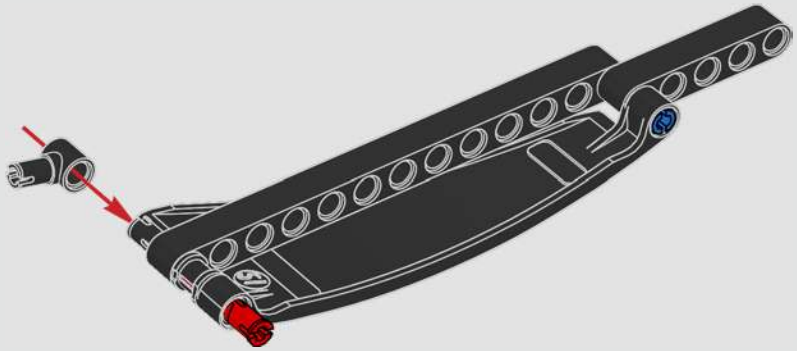

306

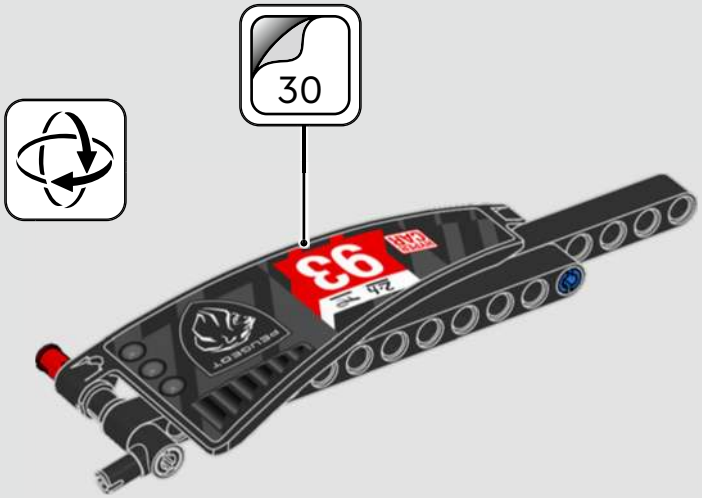

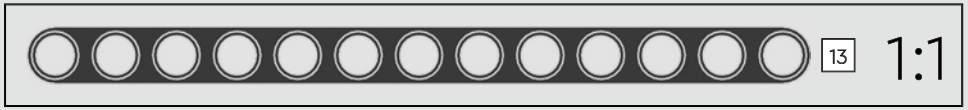

307

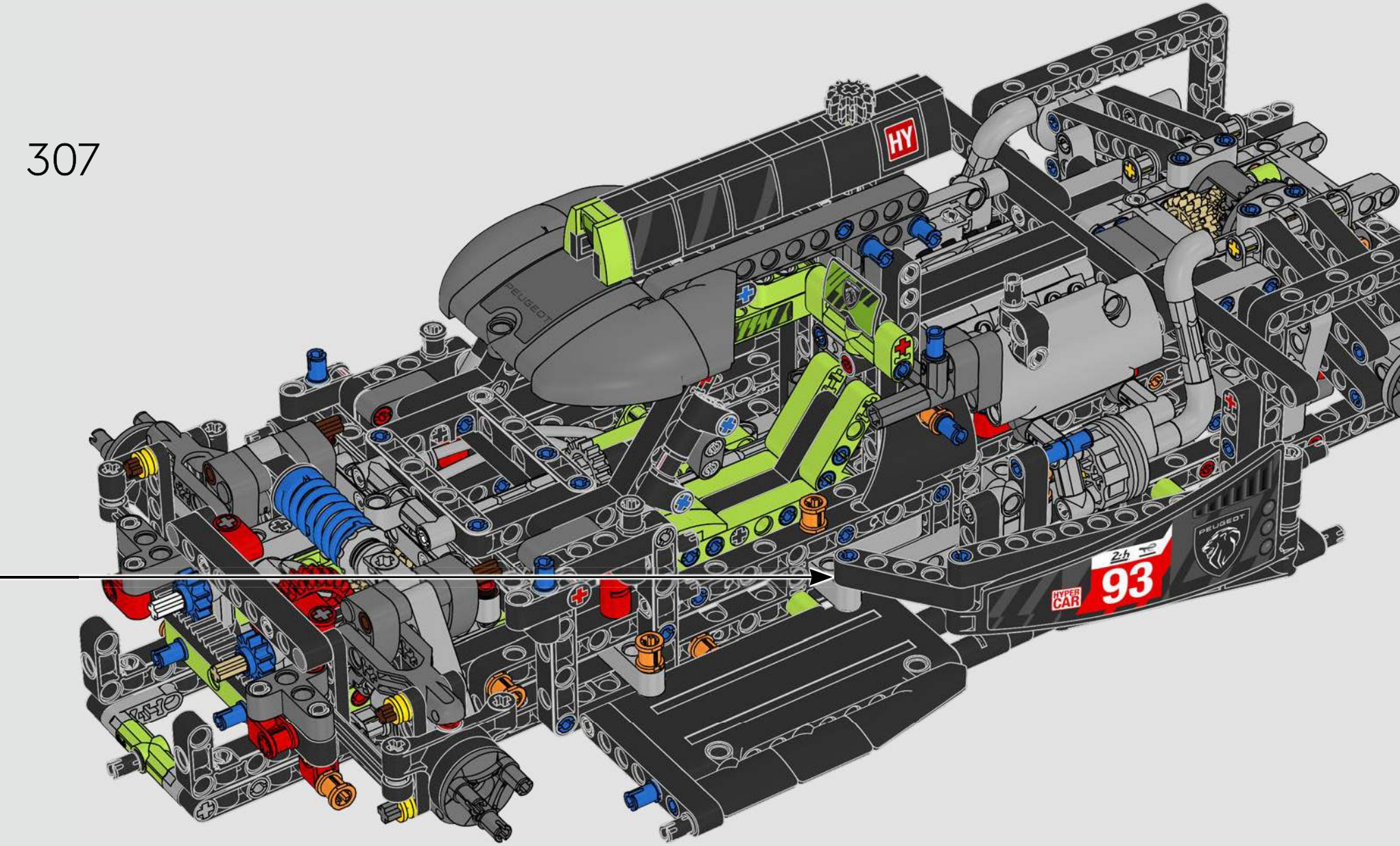

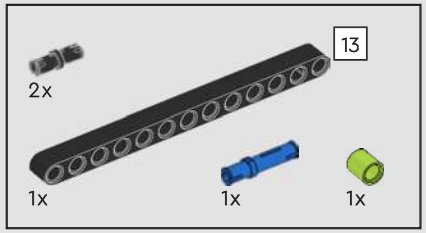

308

1

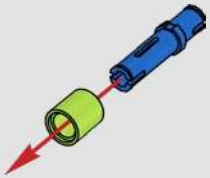

2

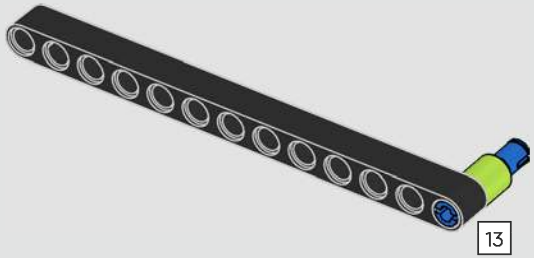

3

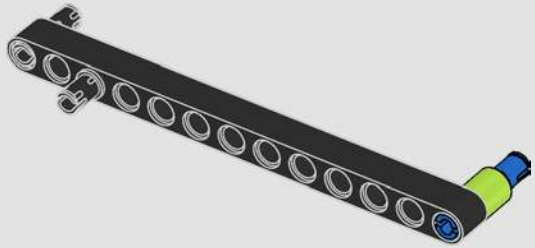

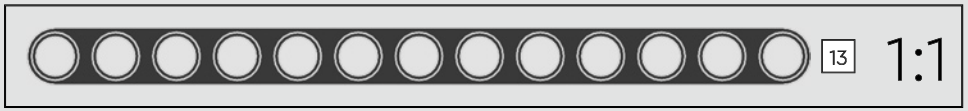

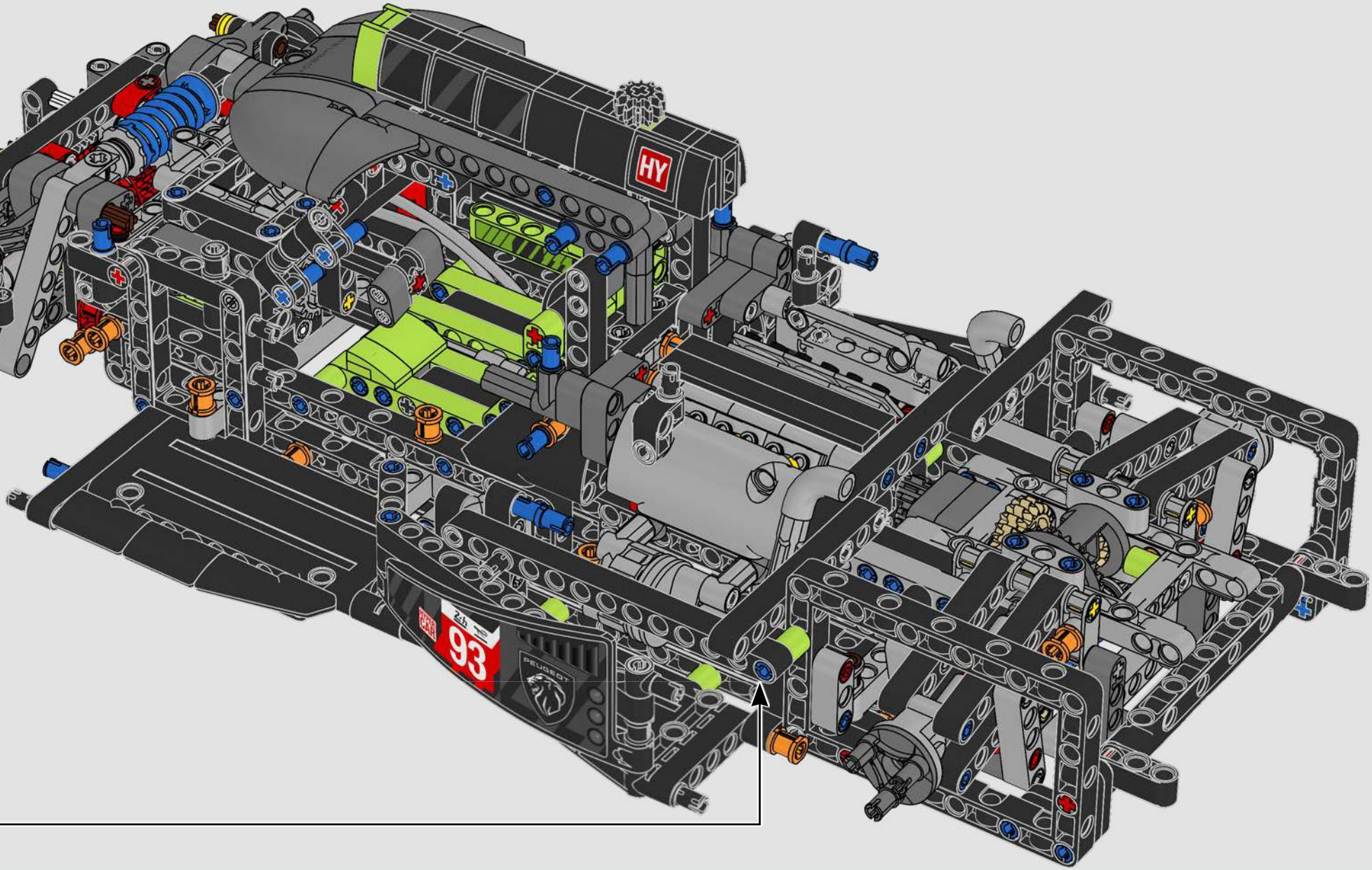
HY
93
PEUGEOT

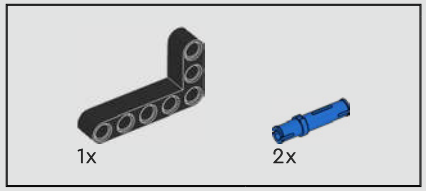

309

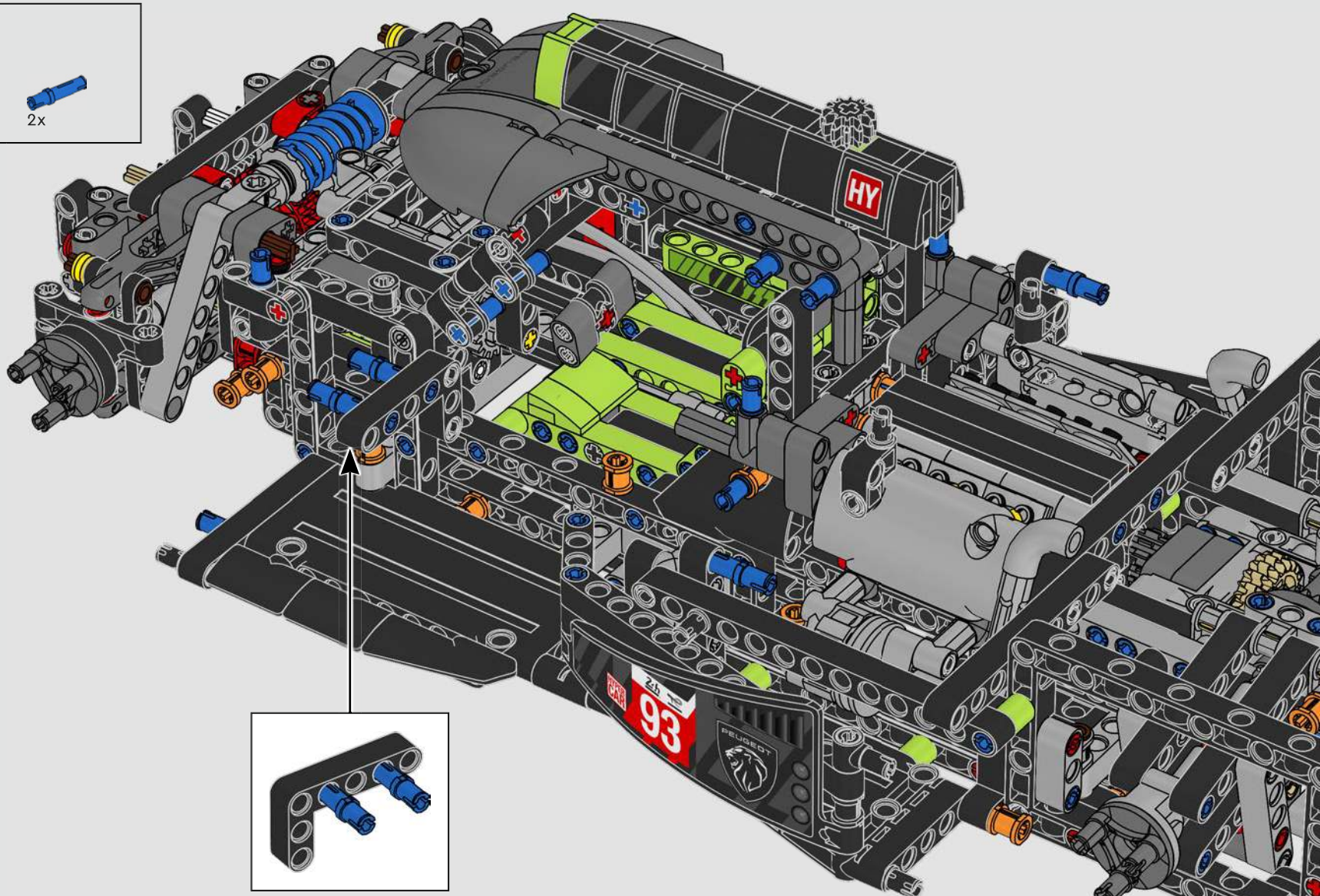

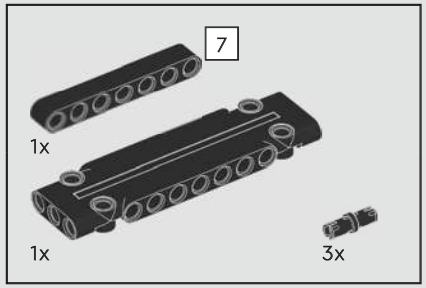

310

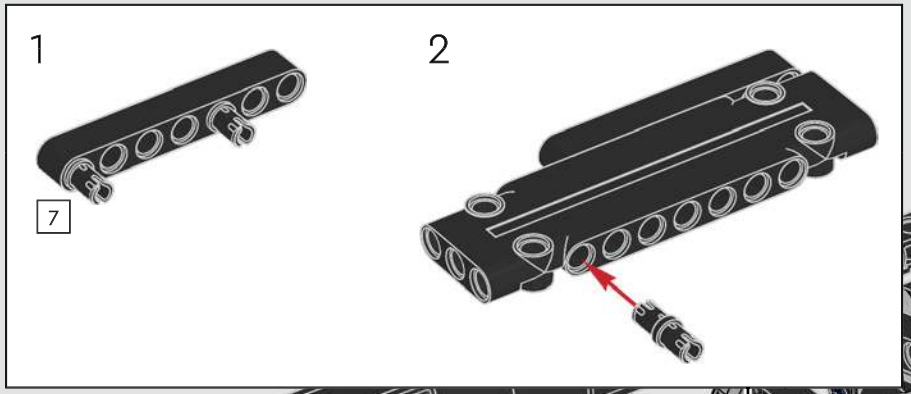

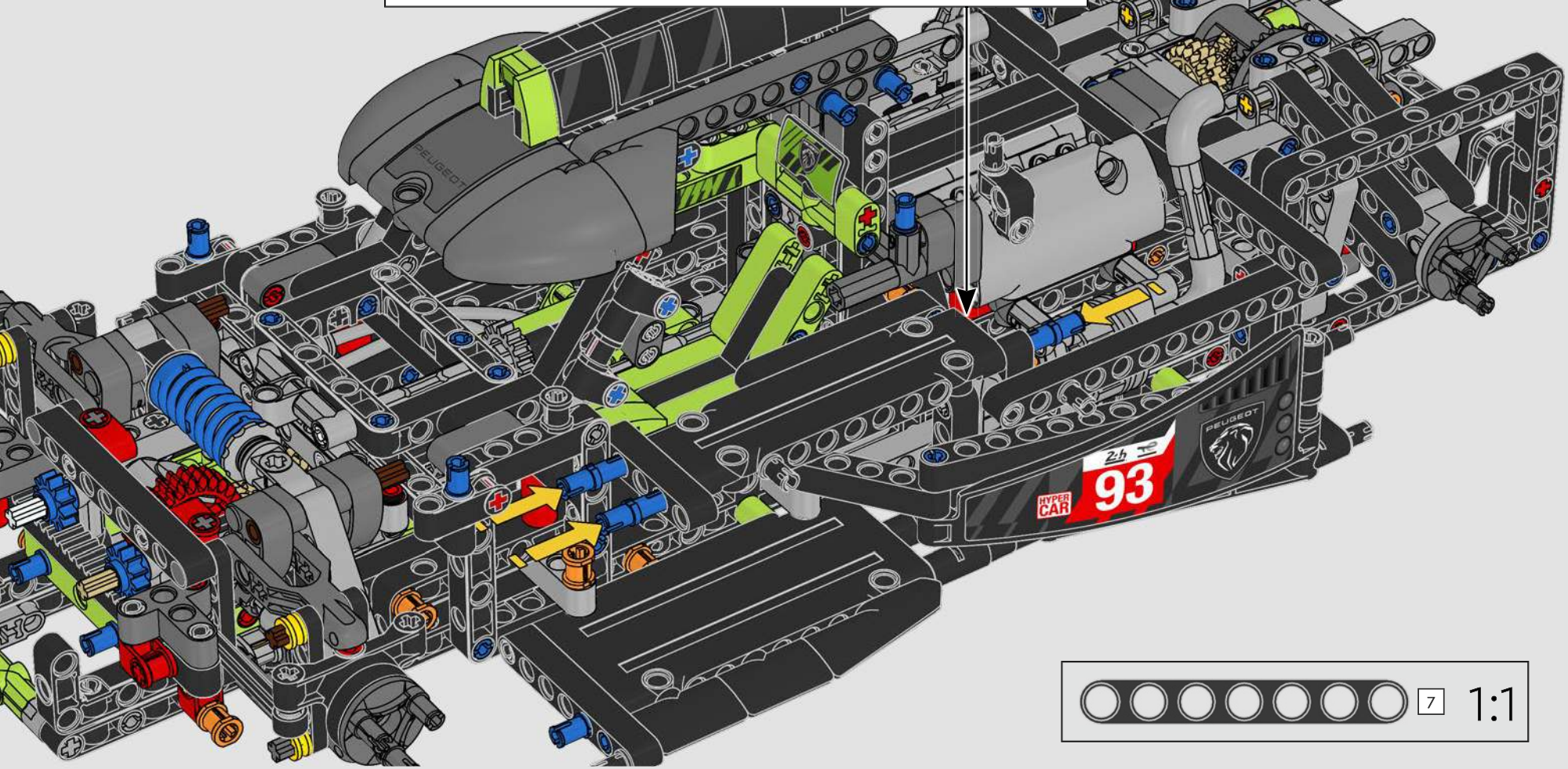

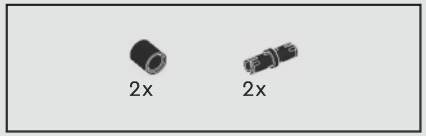

311

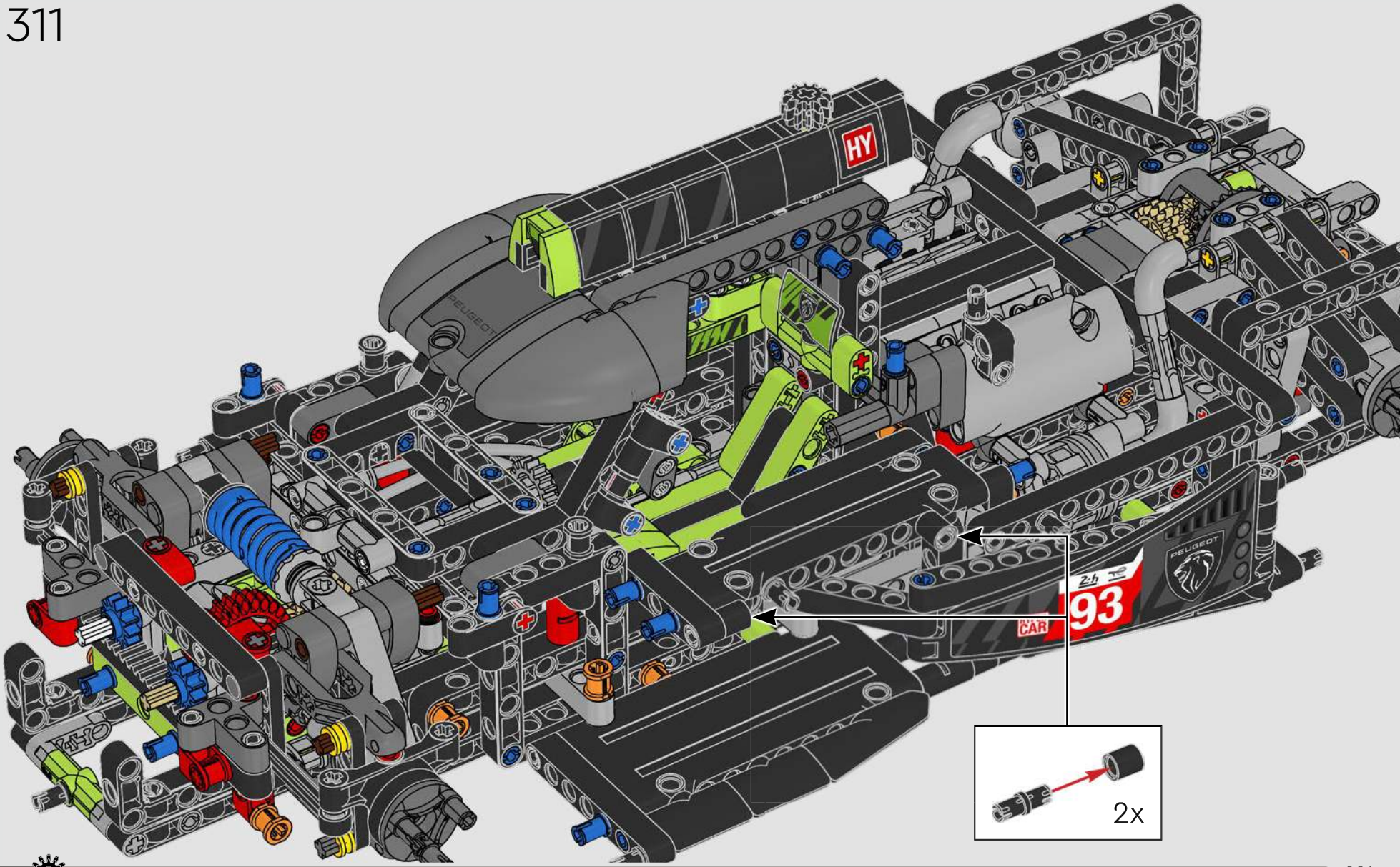

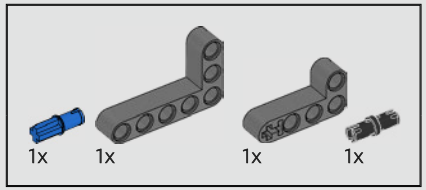

312

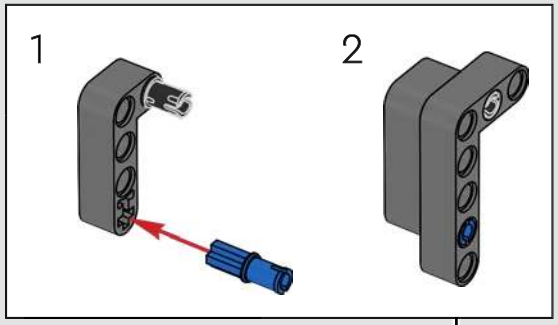

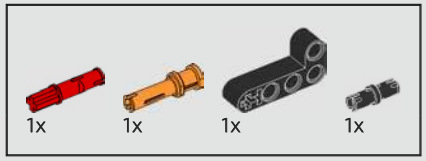

313

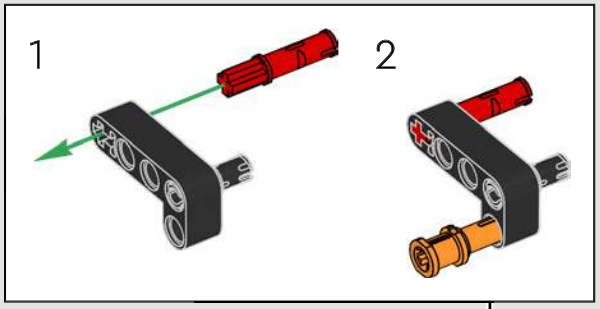

314

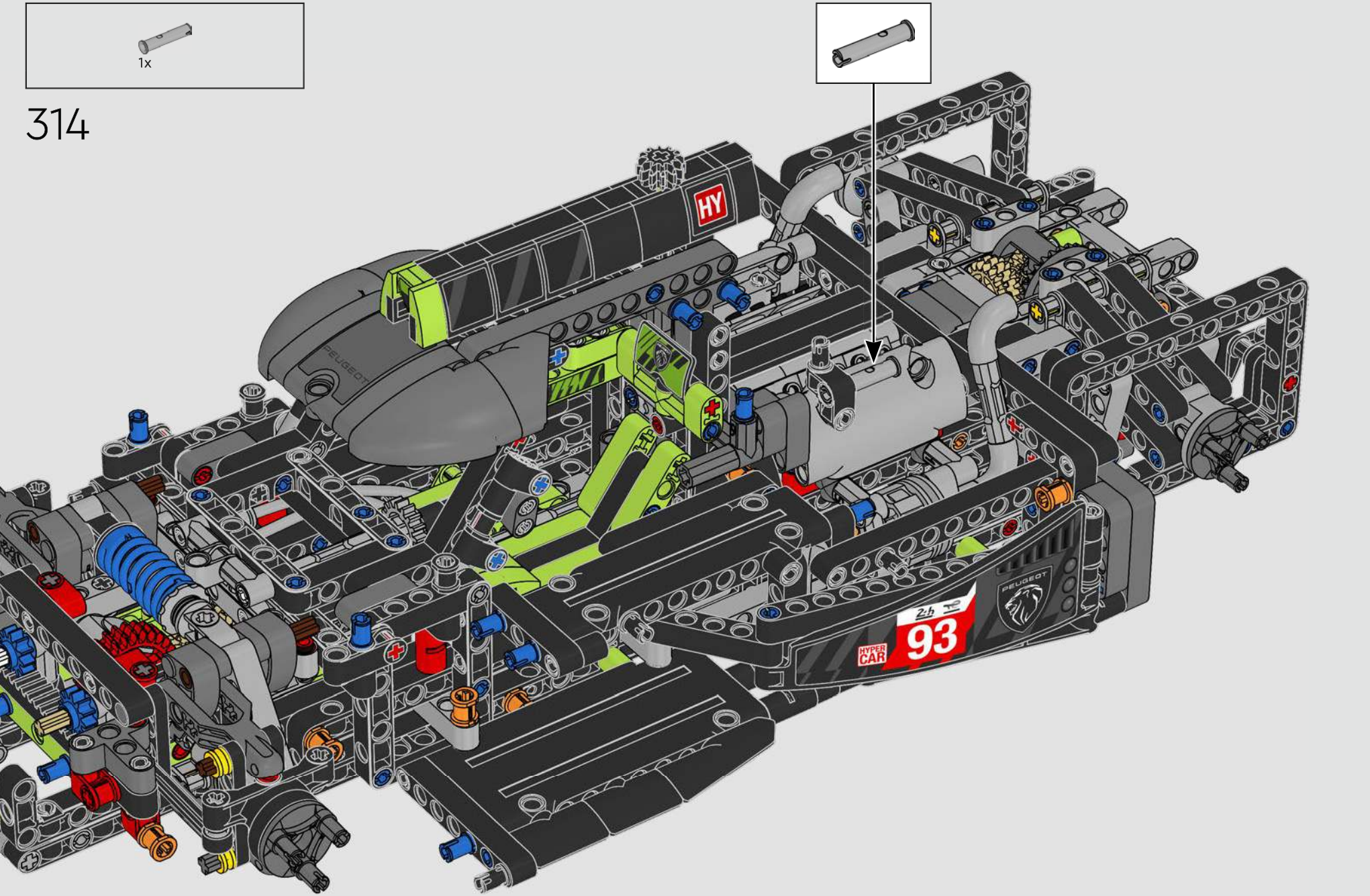

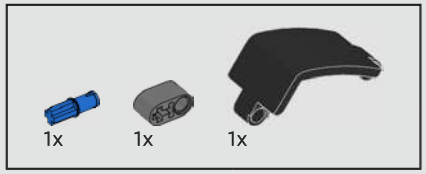

315

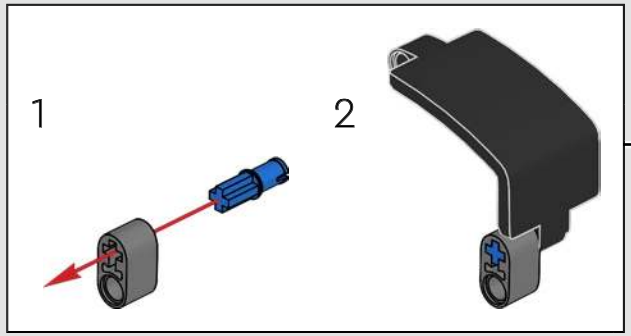

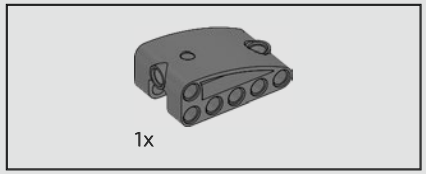

316

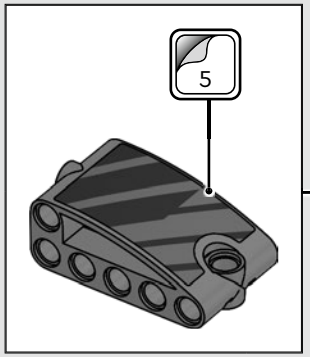

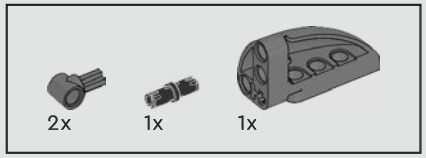

317

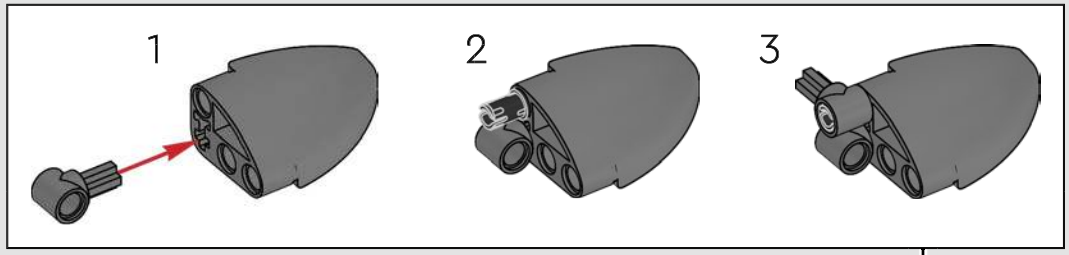

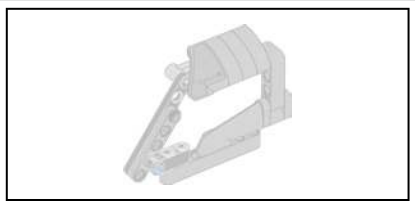

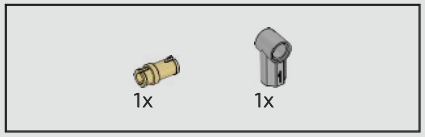

318

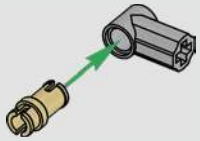

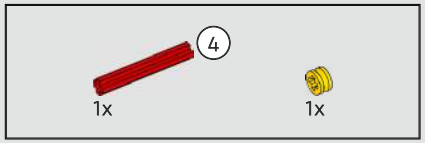

319

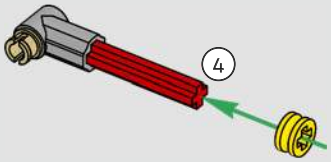

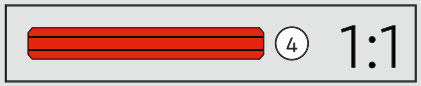

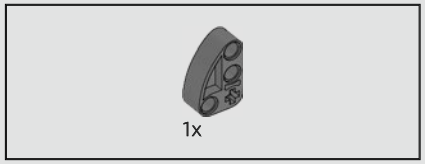

320

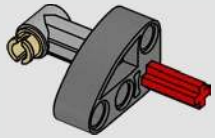

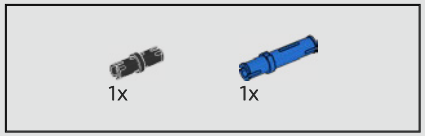

321

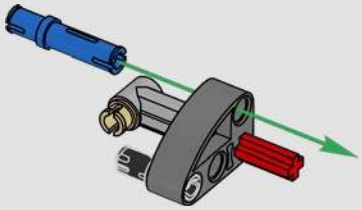

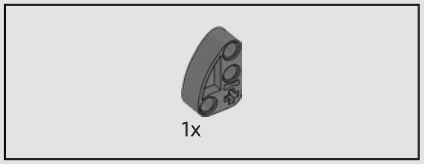

322

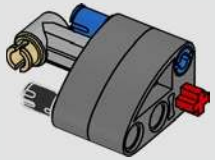

323

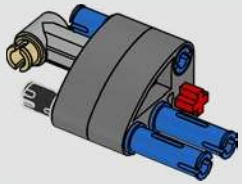

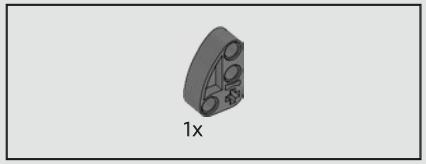

324

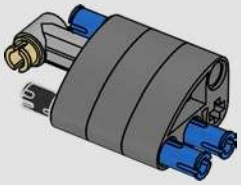

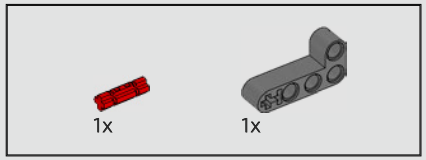

325

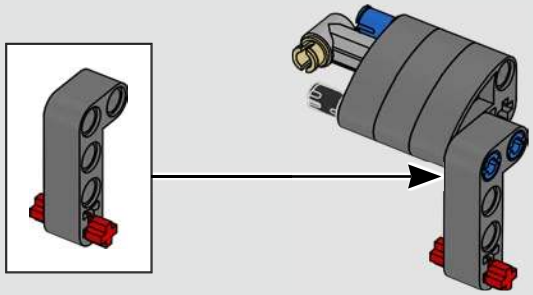

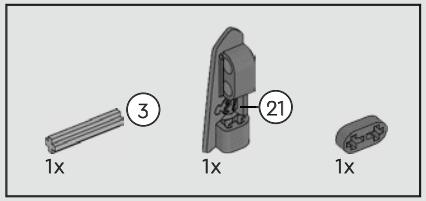

326

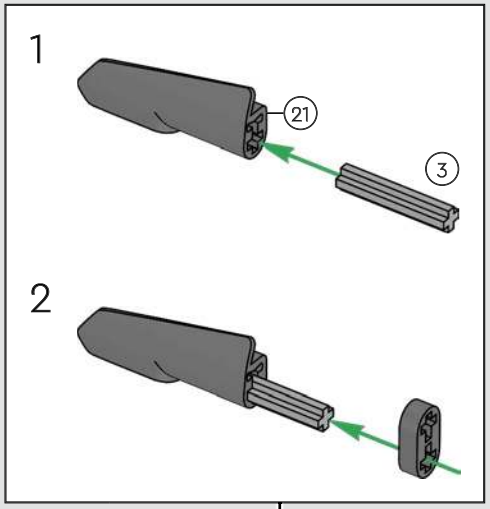

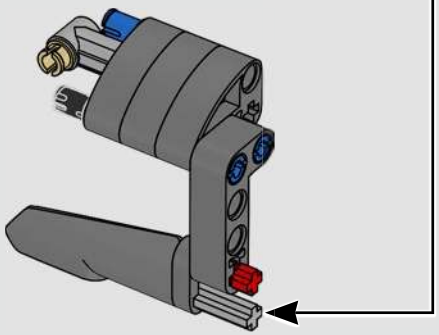

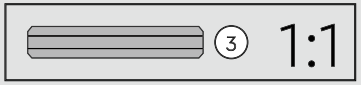

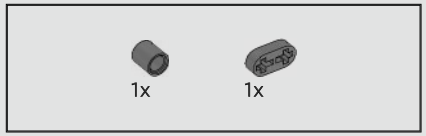

327

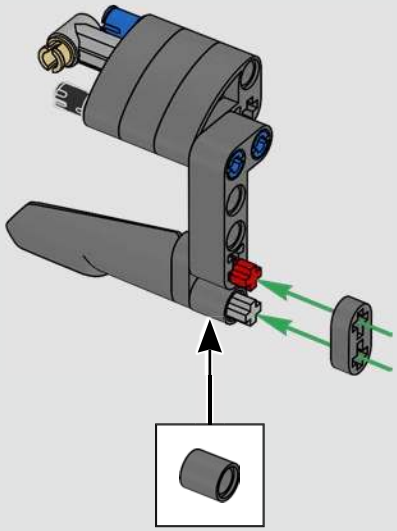

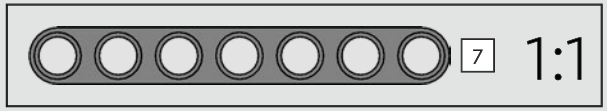

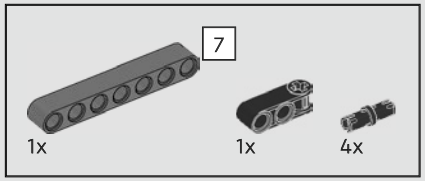

328

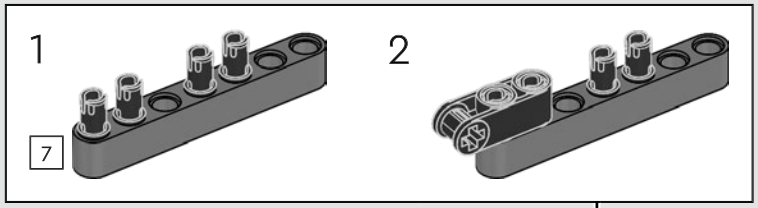

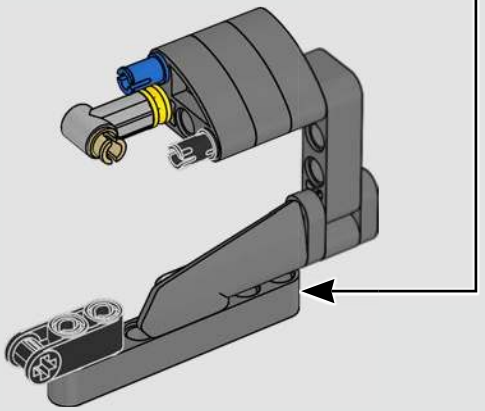

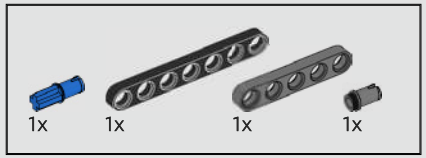

329

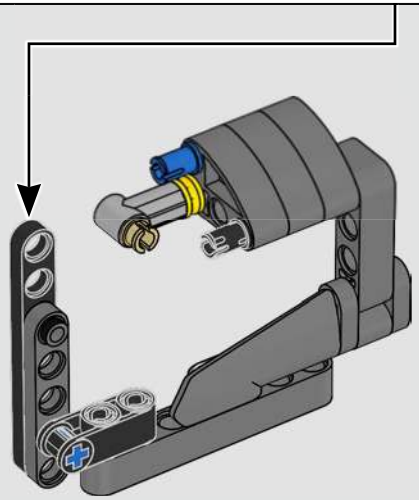

330

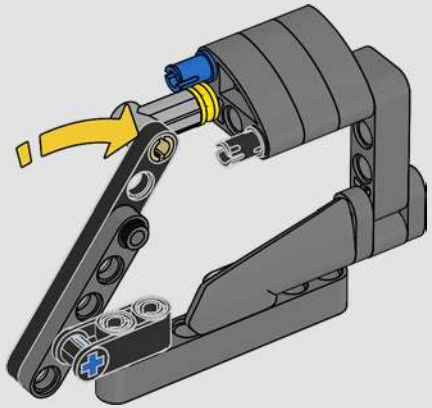

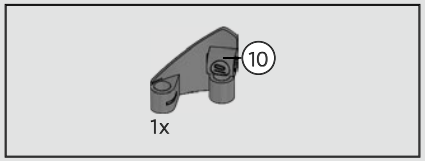

331

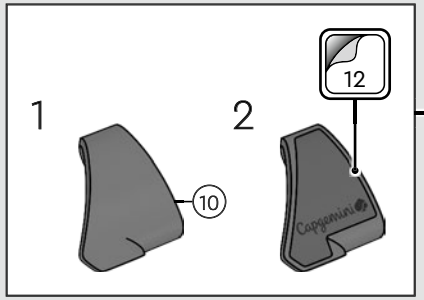

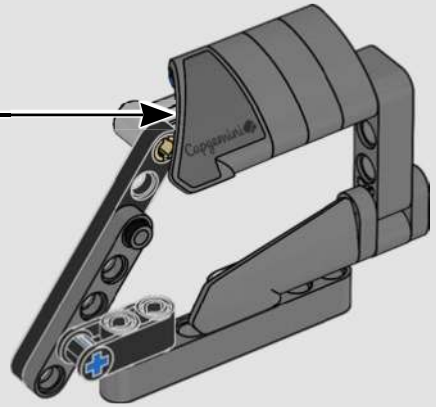

332

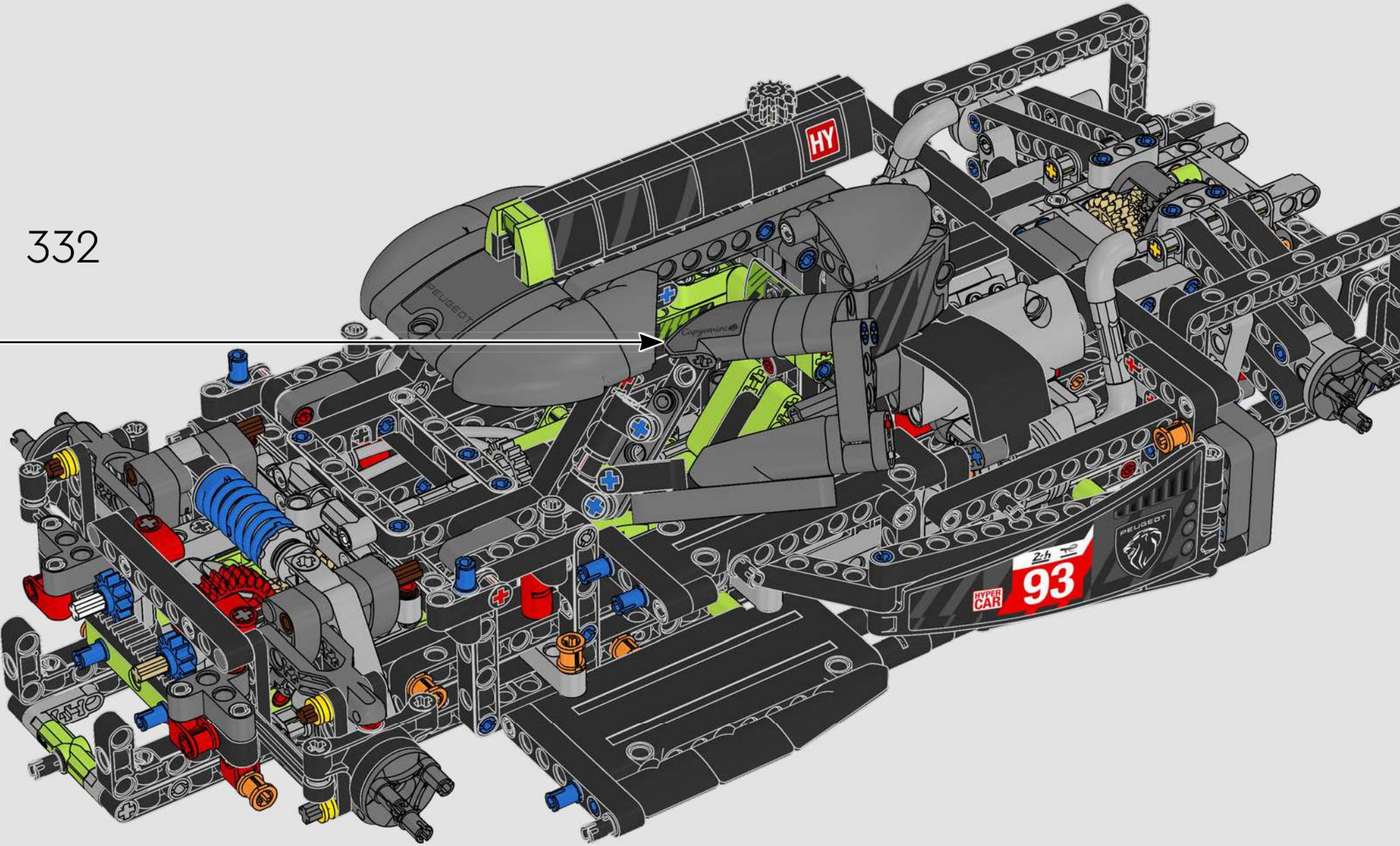

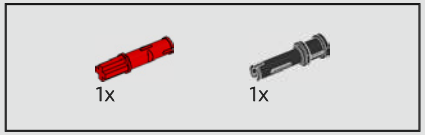

333

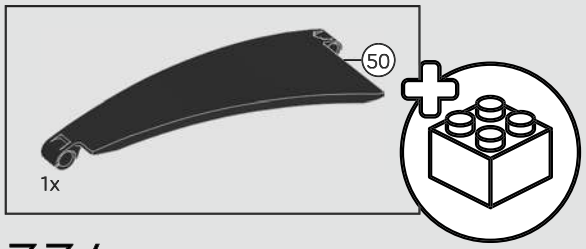

334

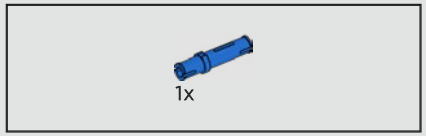

335

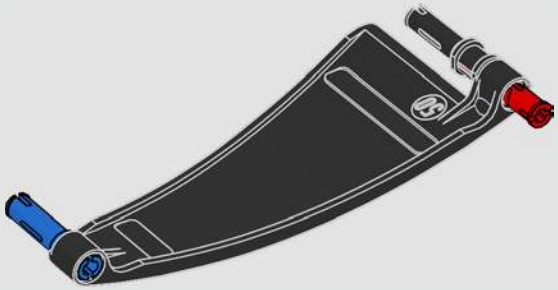

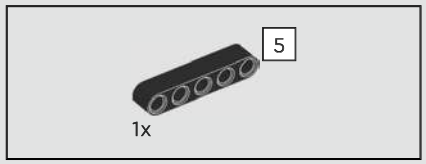

336

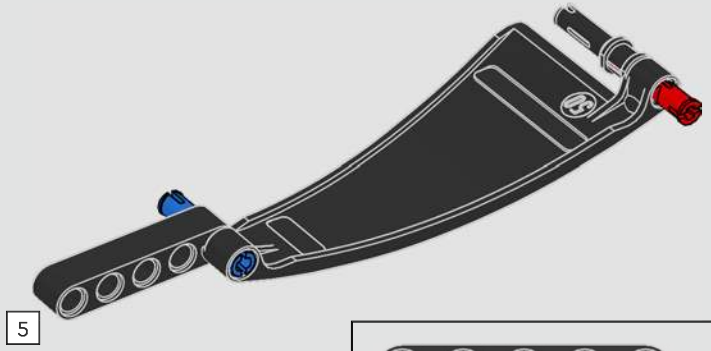

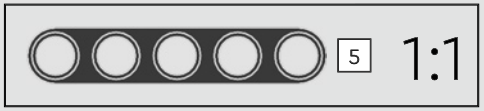

337

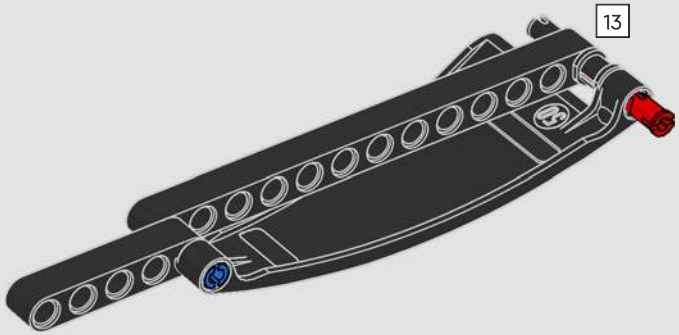

338

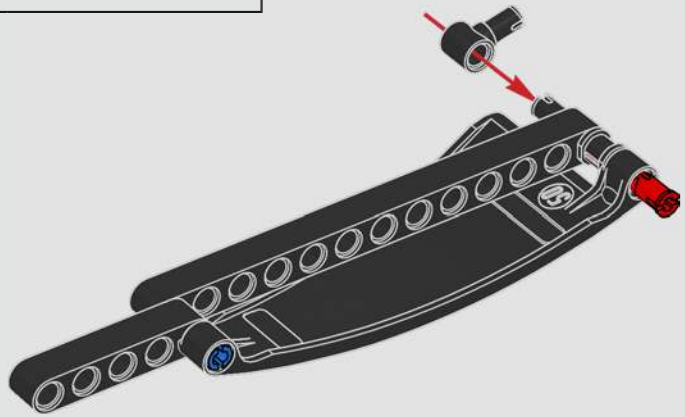

1:1

339

340

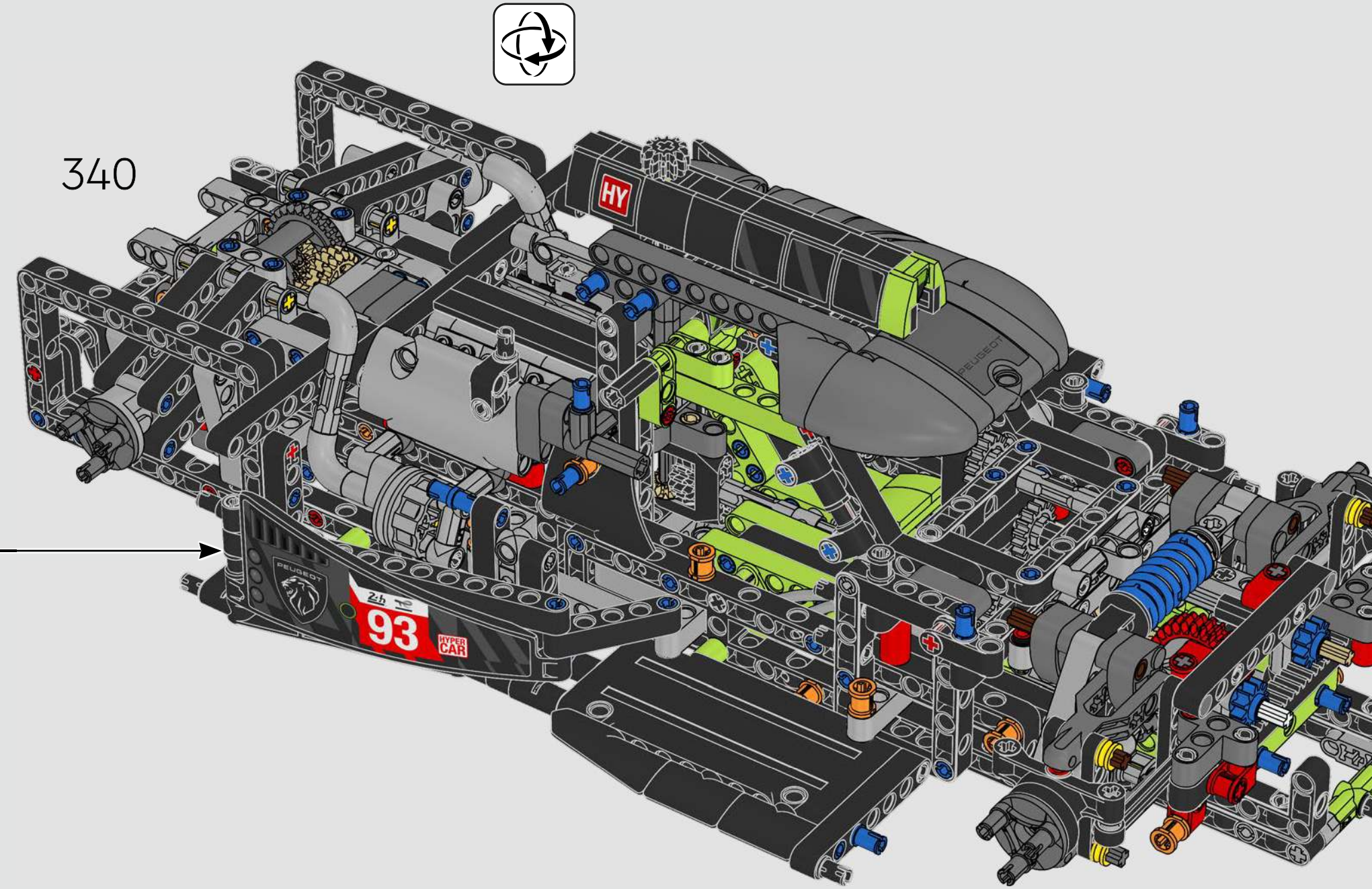

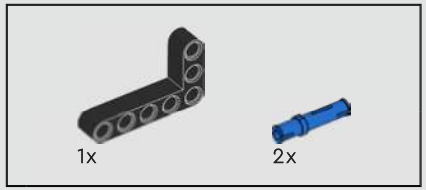

341

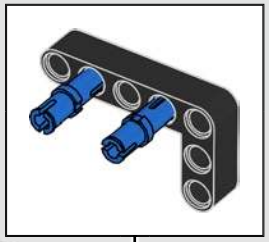

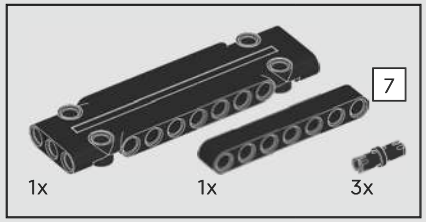

342

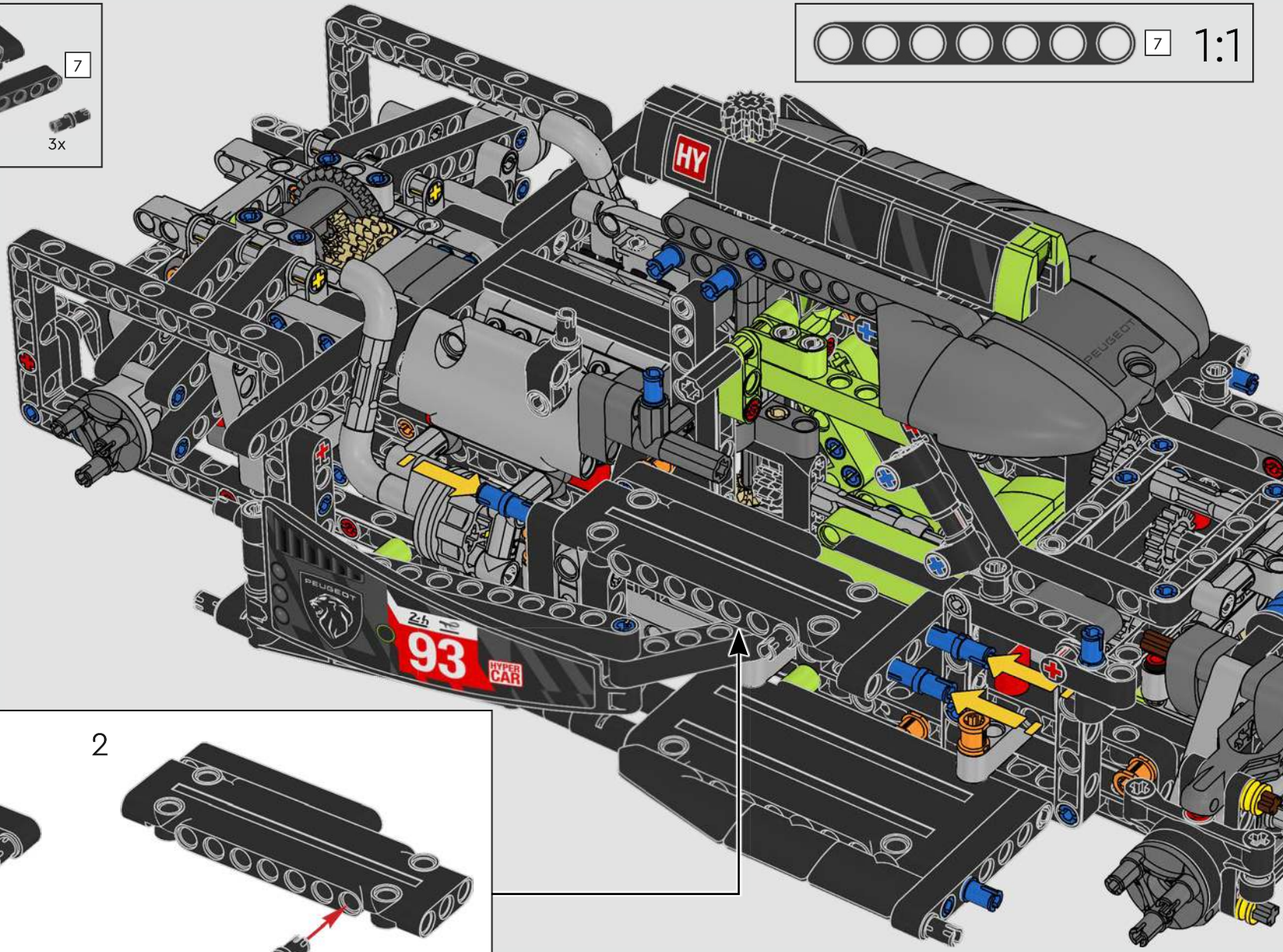

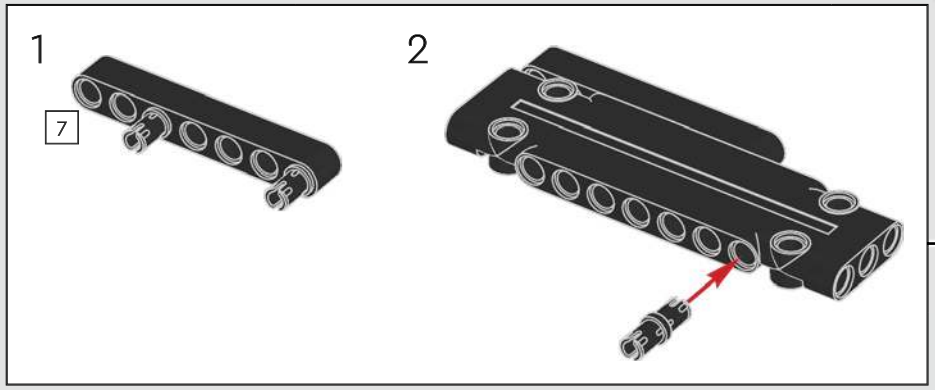

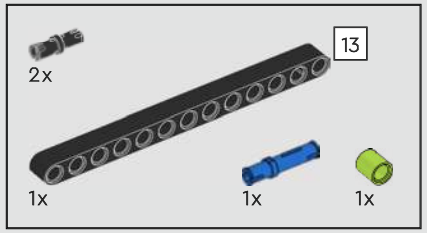

343

1

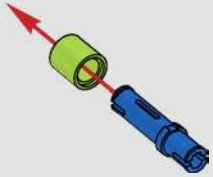

2

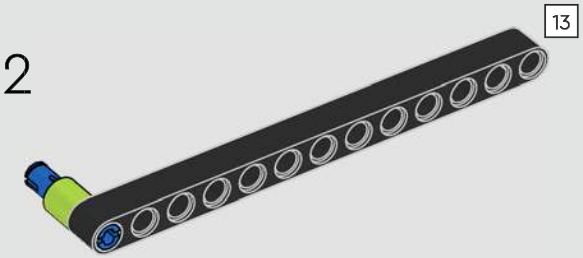

3

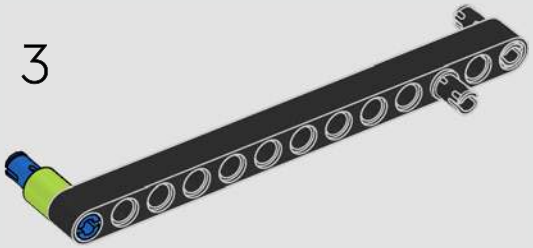

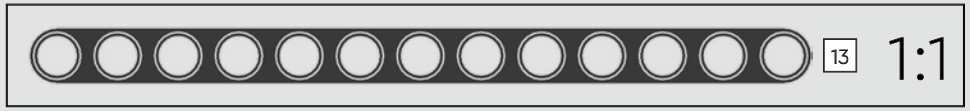

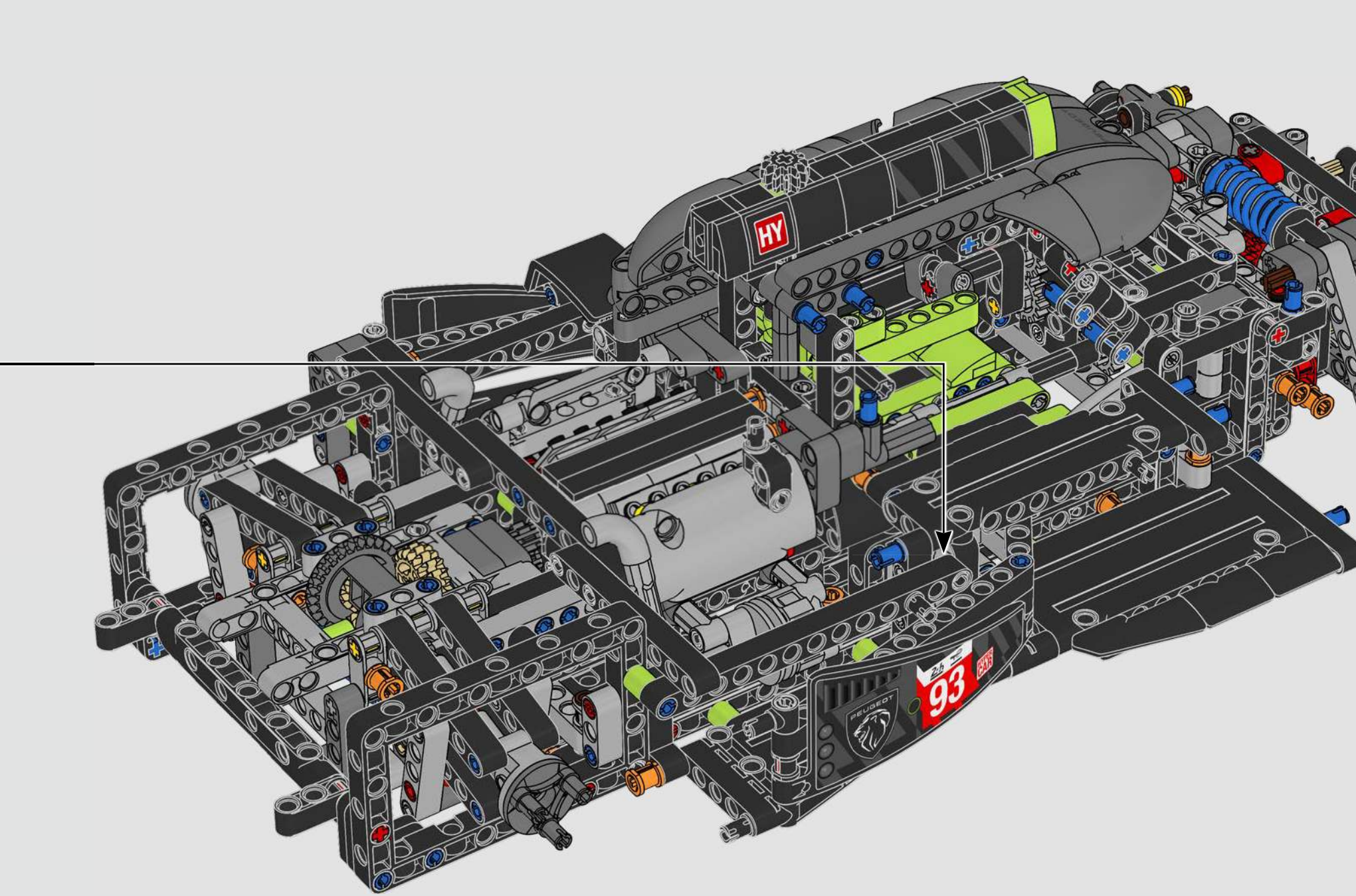
HY
PEUGEOT
93

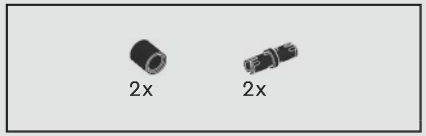

344

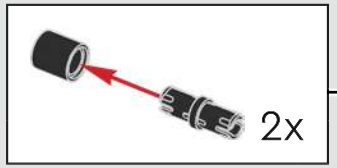

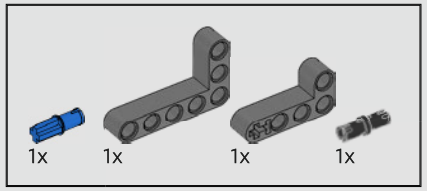

345

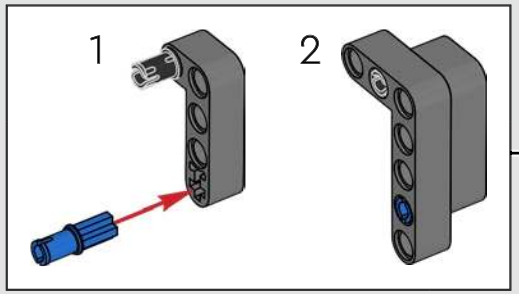

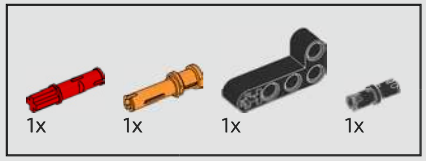

346

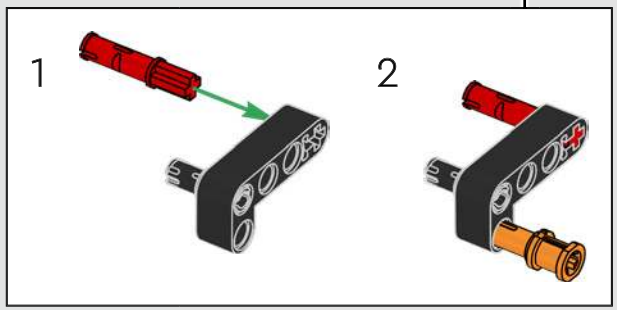

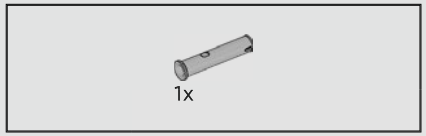

347

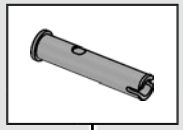

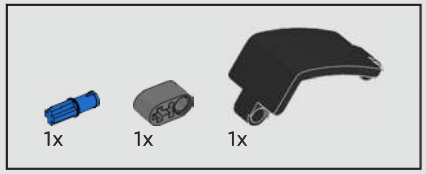

348

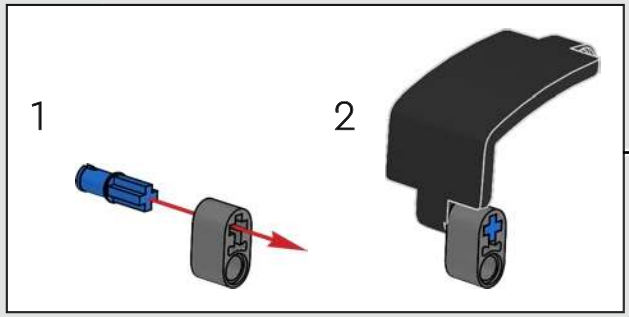

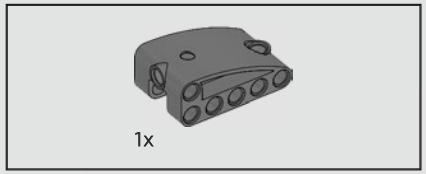

349

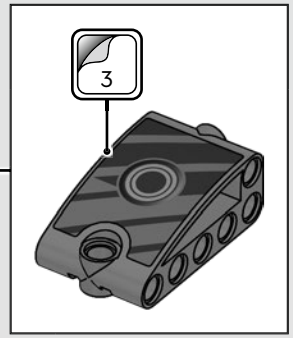

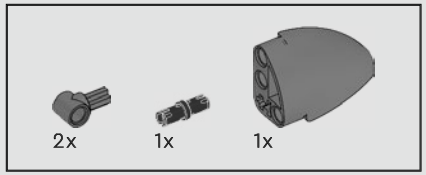

350

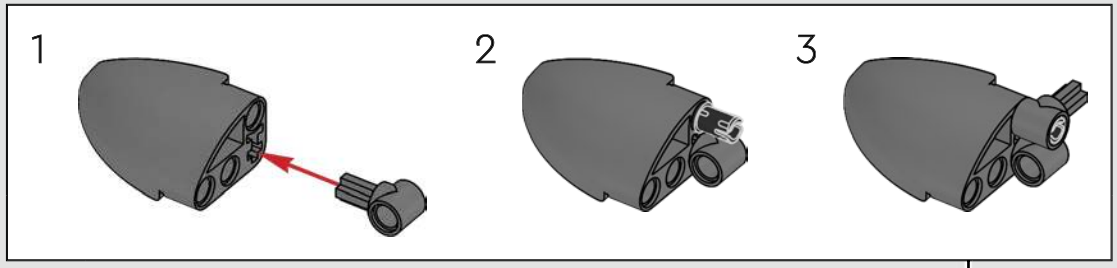

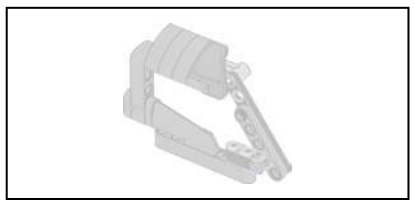

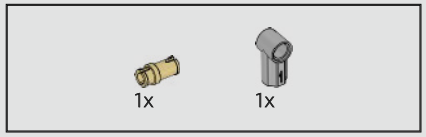

351

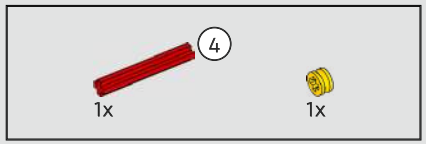

352

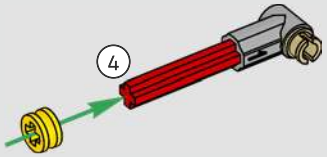

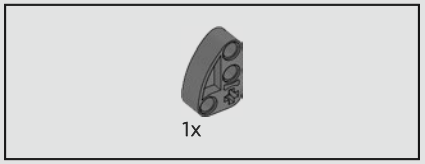

353

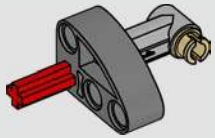

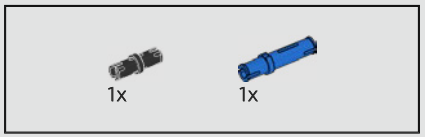

354

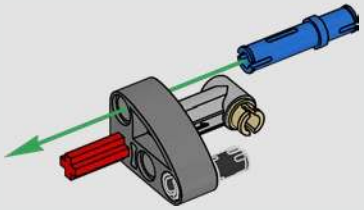

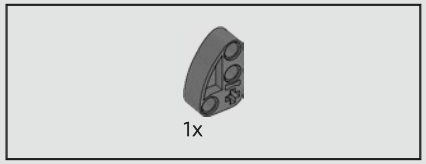

355

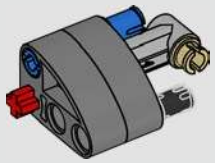

356

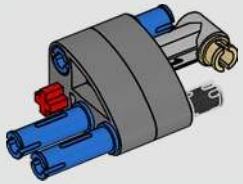

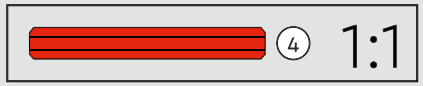

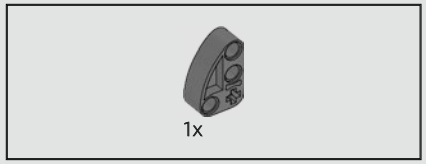

357

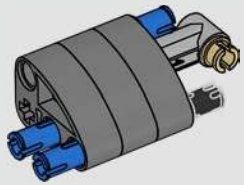

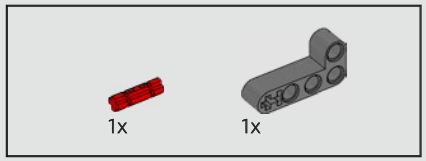

358

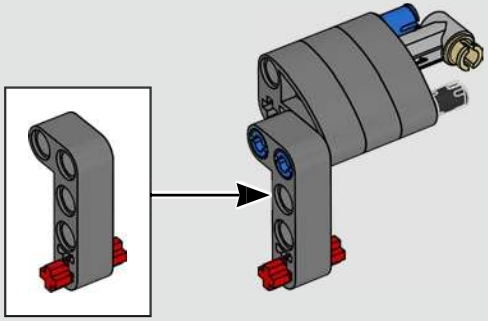

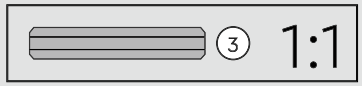

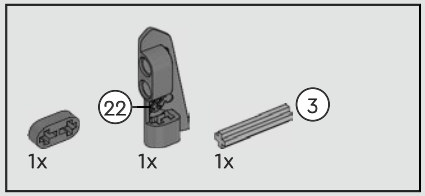

359

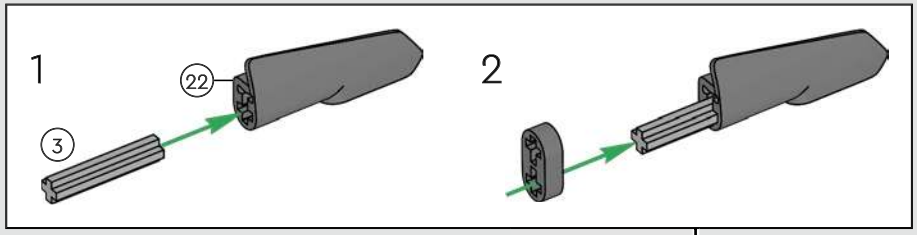

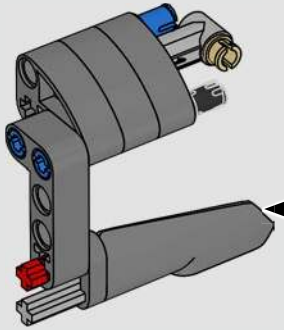

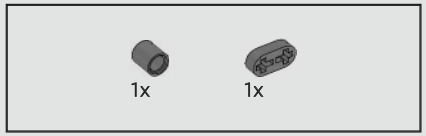

360

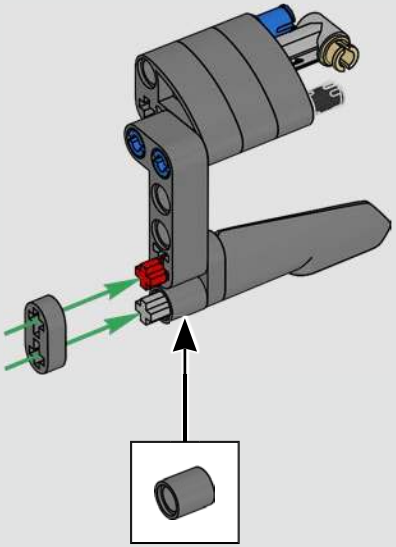

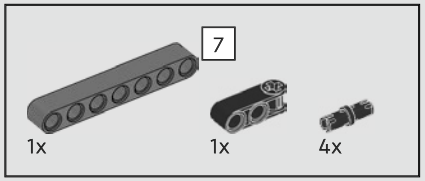

361

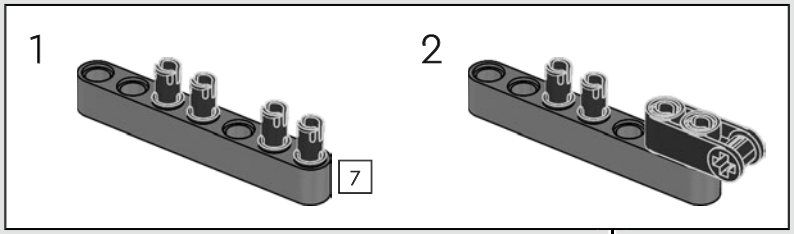

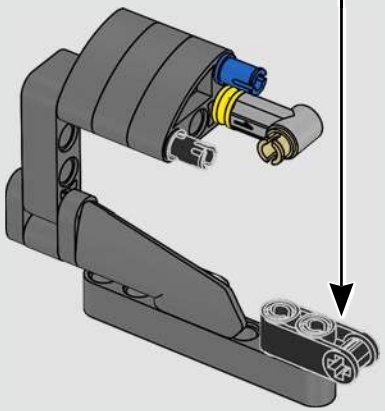

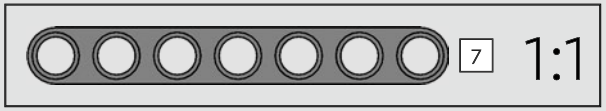

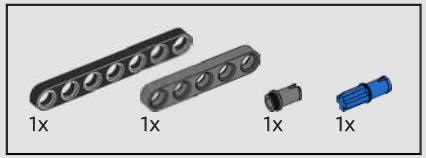

362

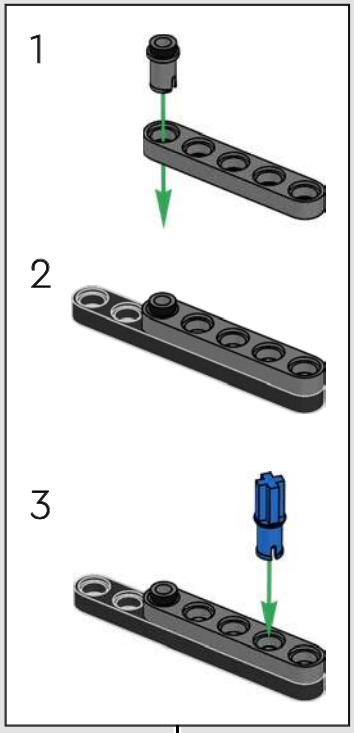

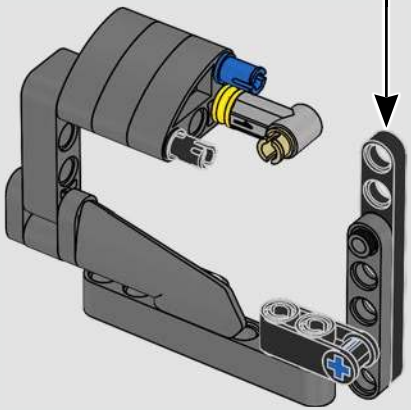

363

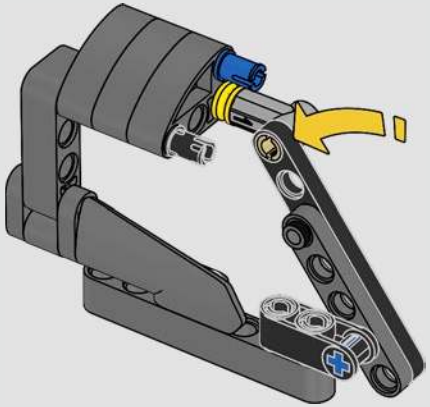

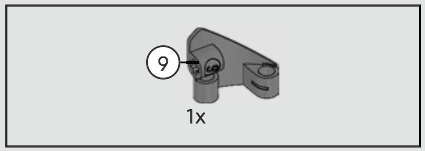

364

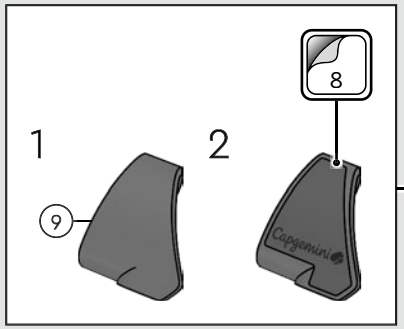

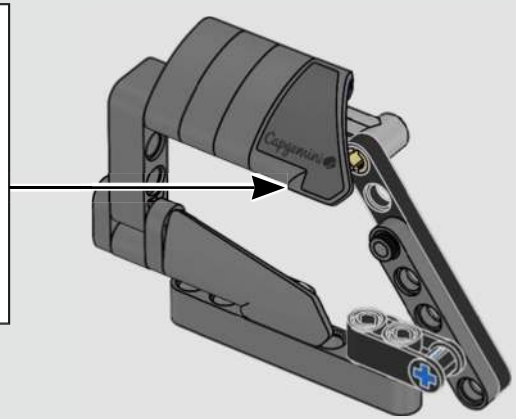

365

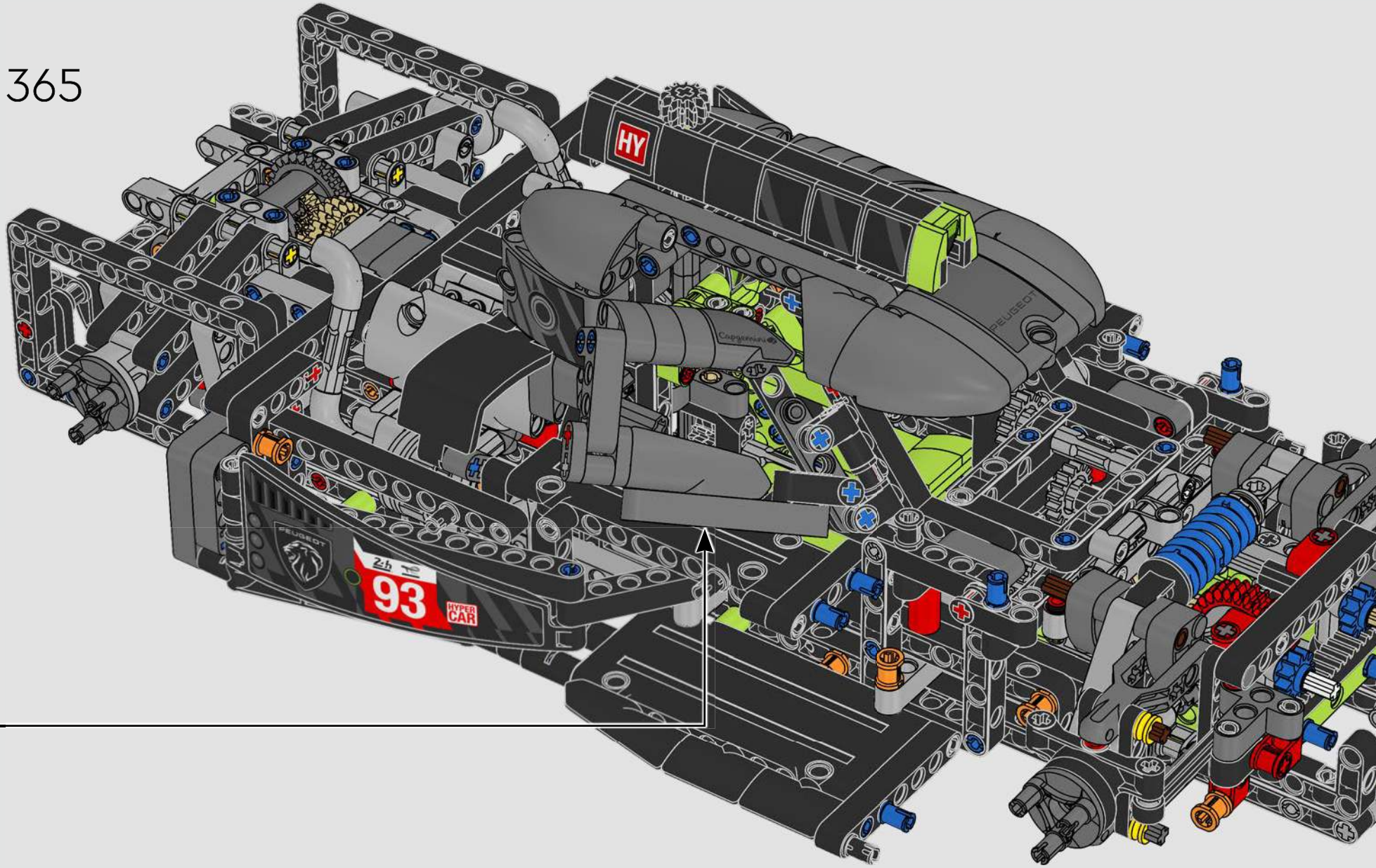

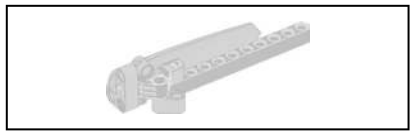

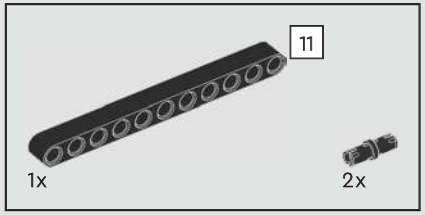

366

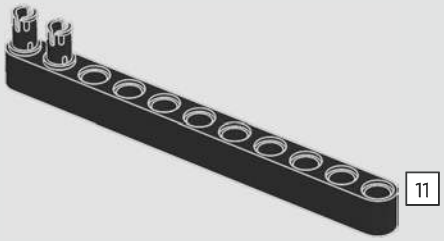

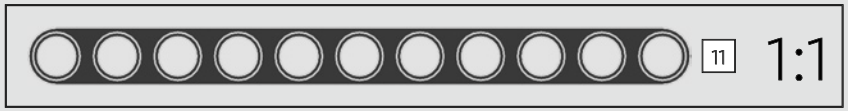

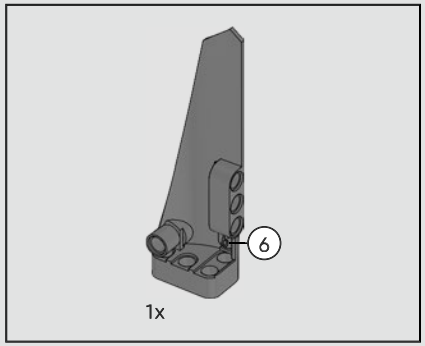

367

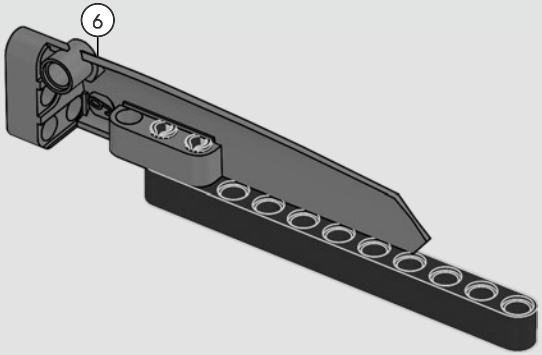

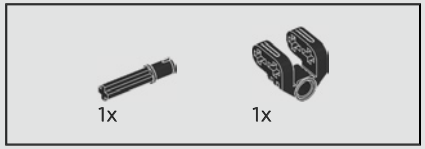

368

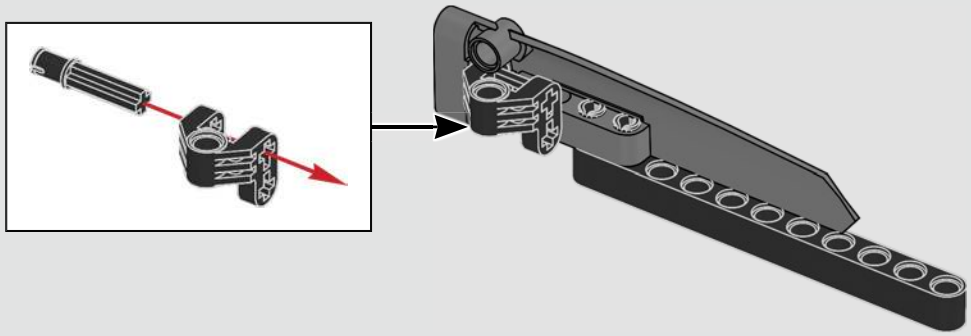

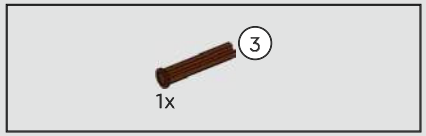

369

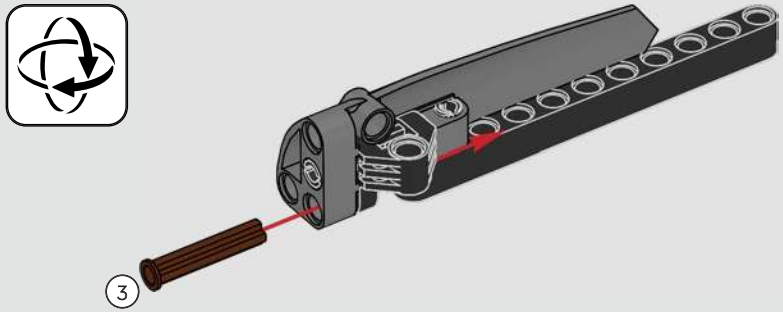

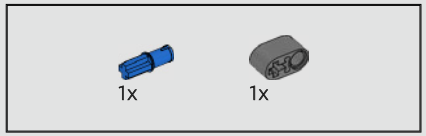

370

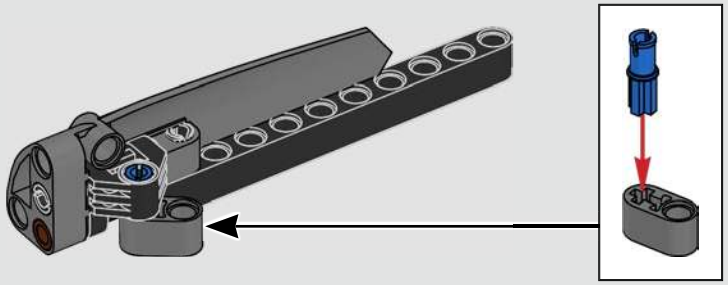

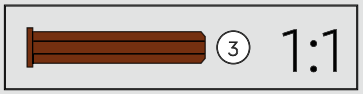

371

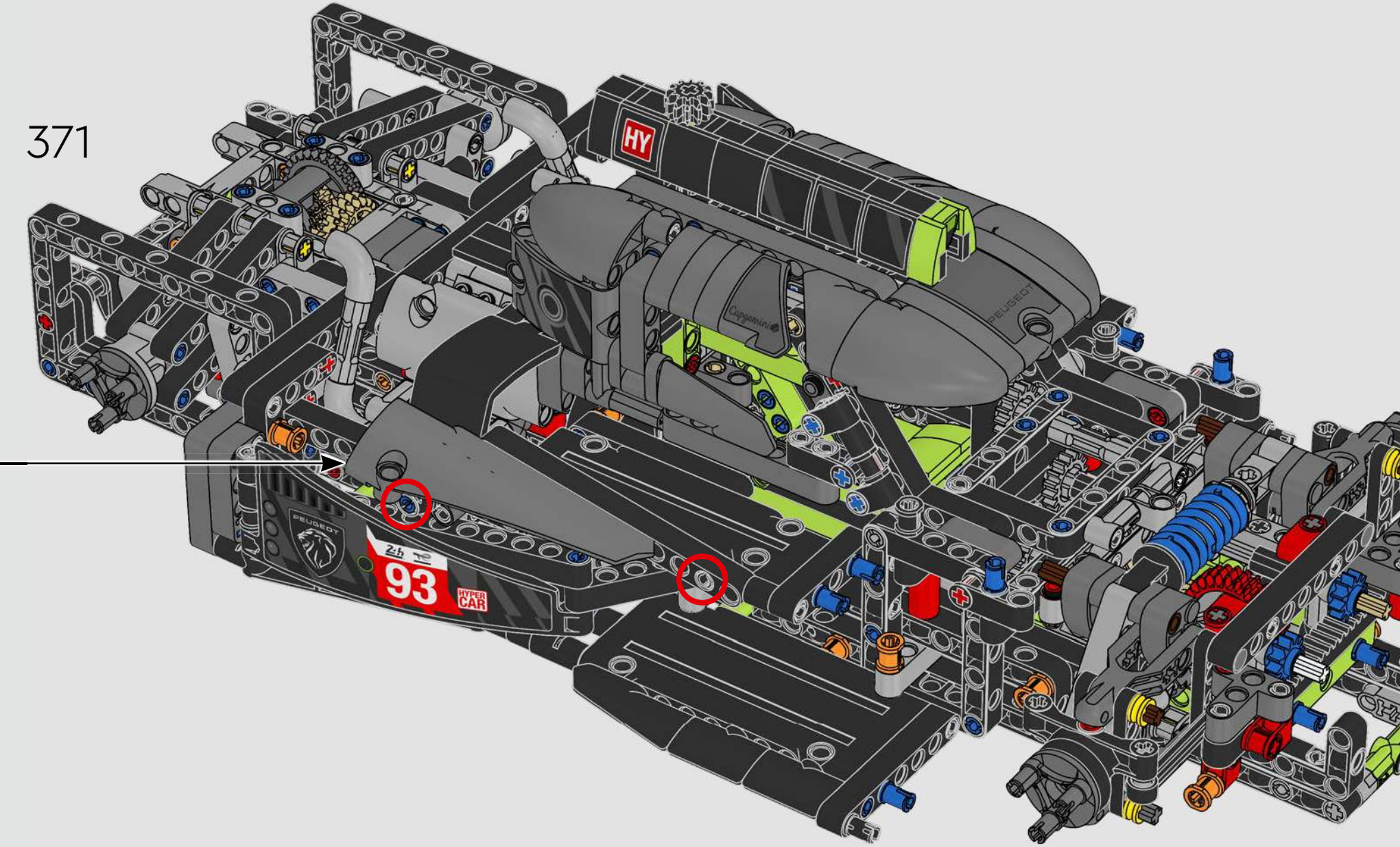

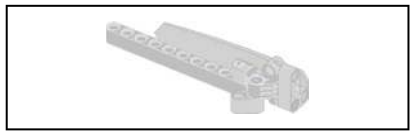

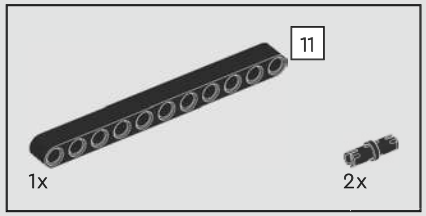

372

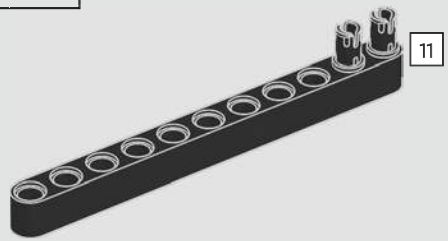

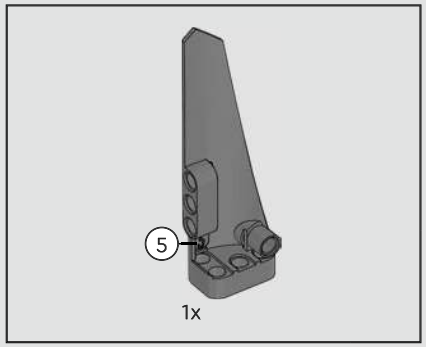

373

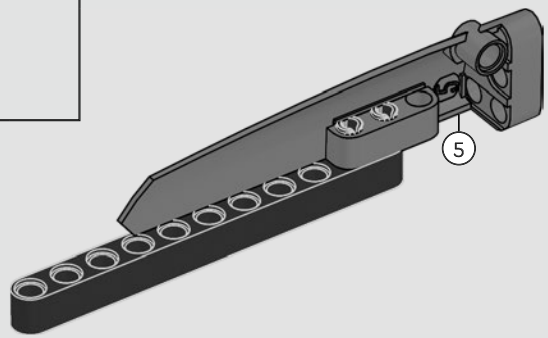

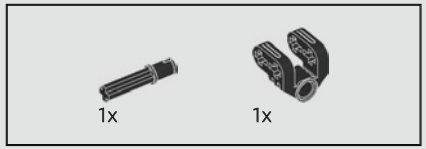

374

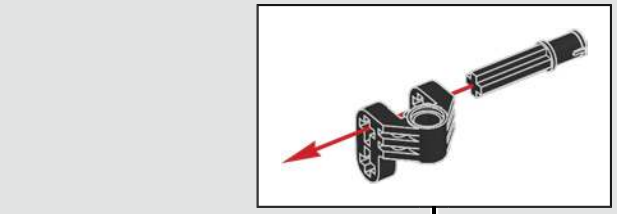

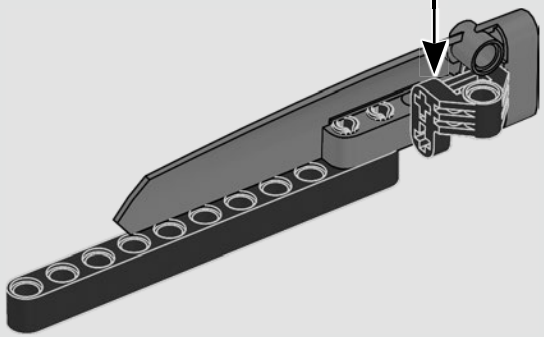

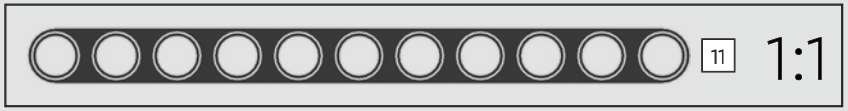

375

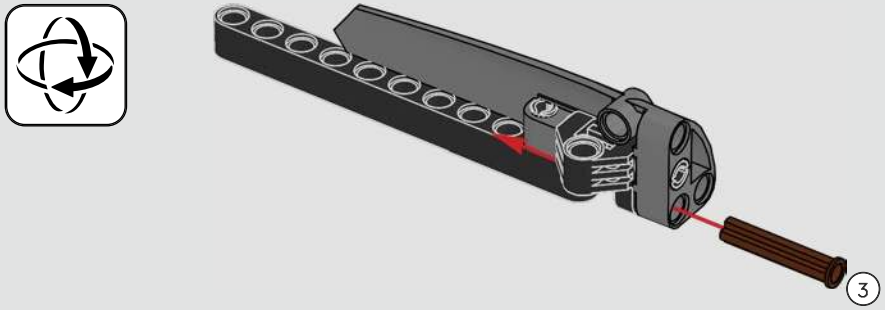

376

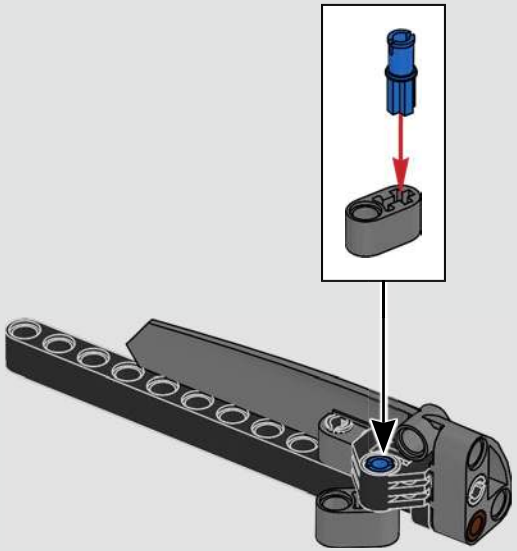

1:1

377

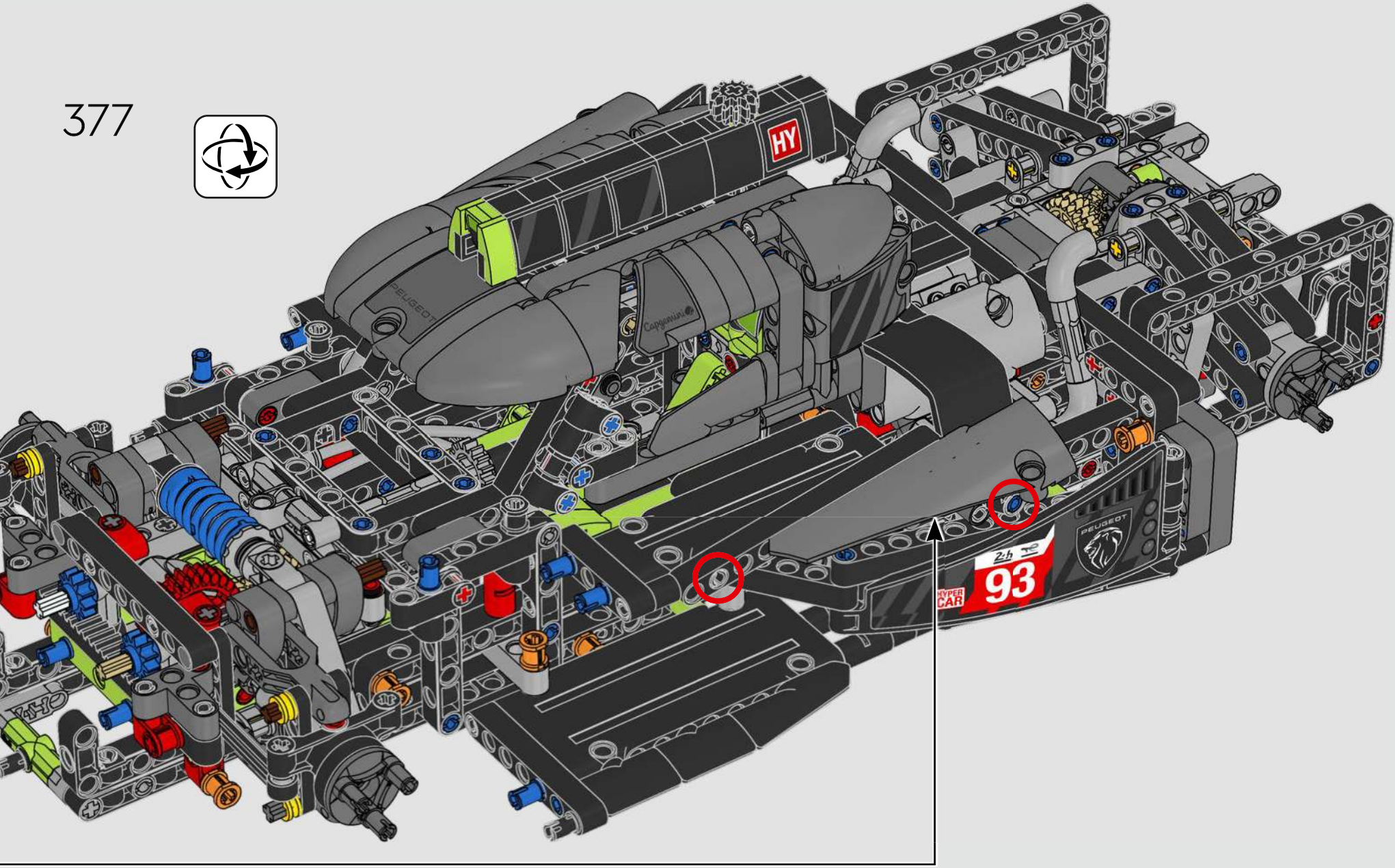

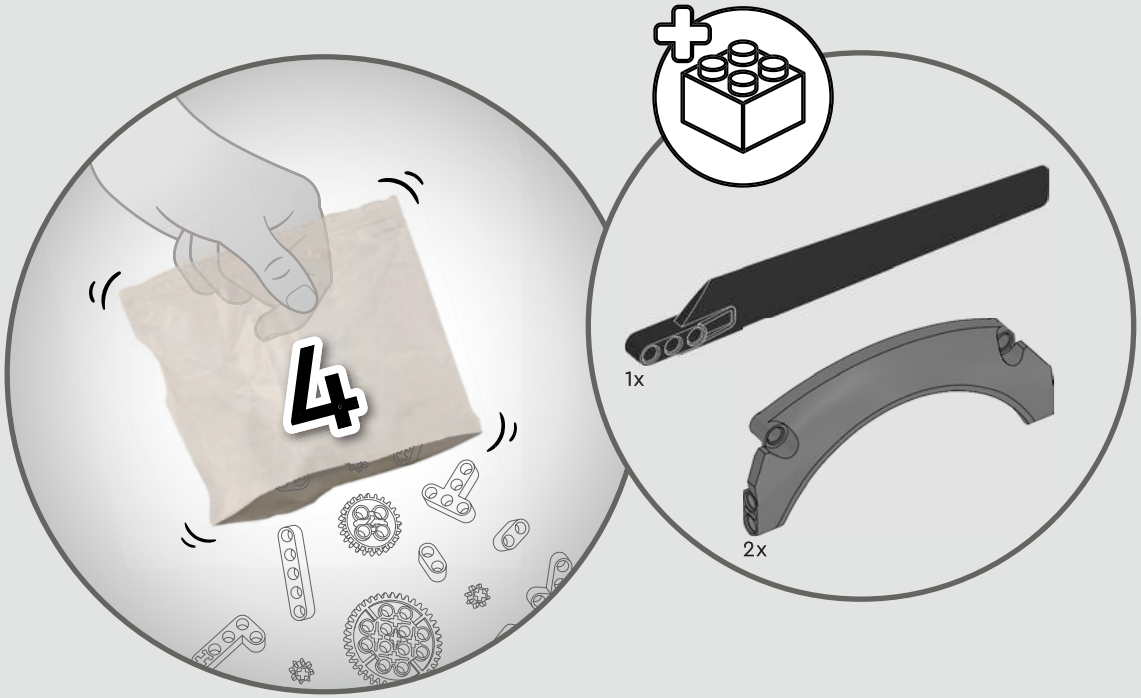

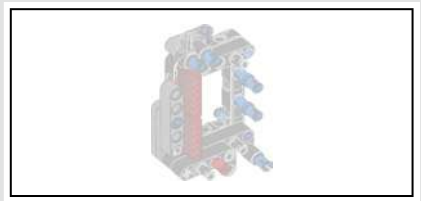

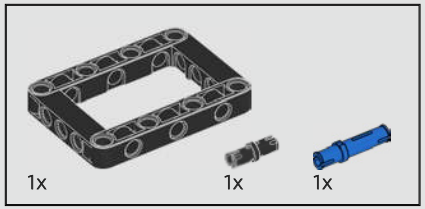

378

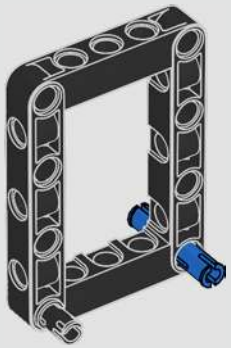

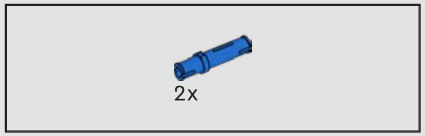

379

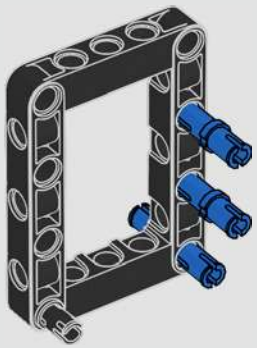

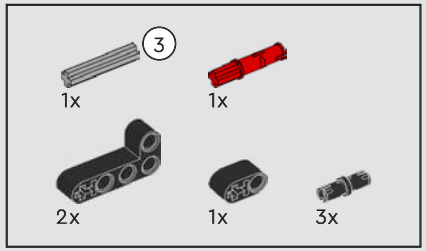

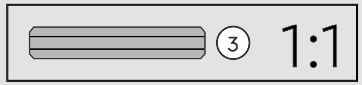

380

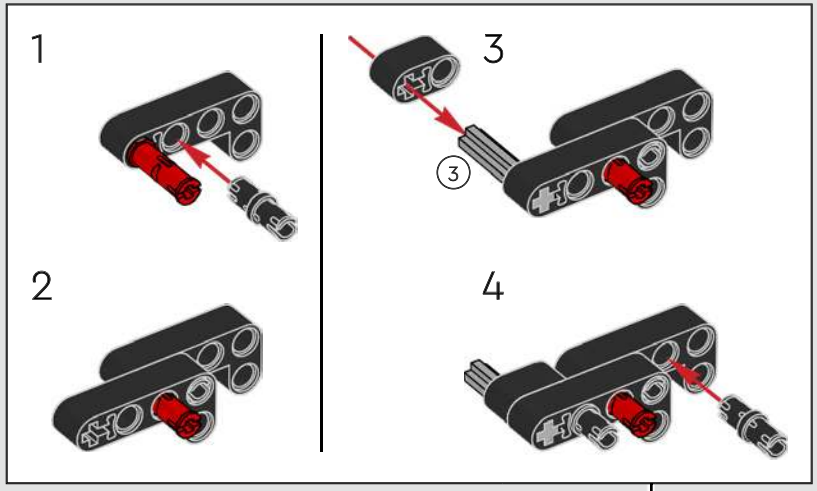

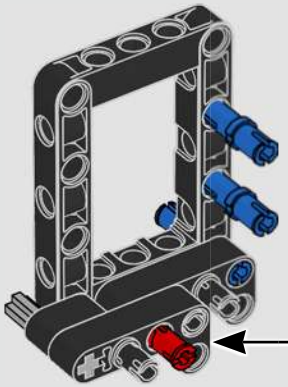

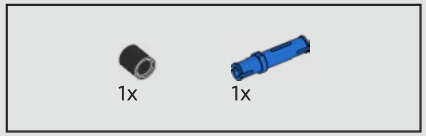

381

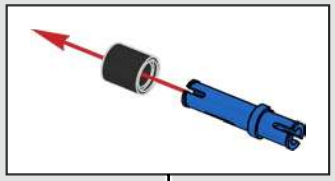

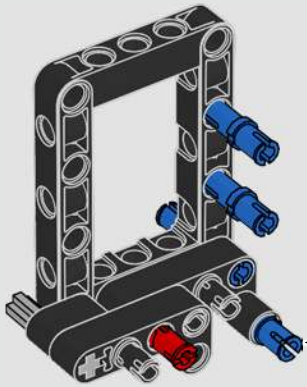

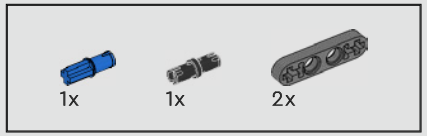

382

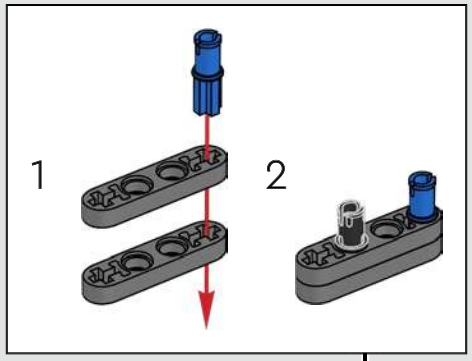

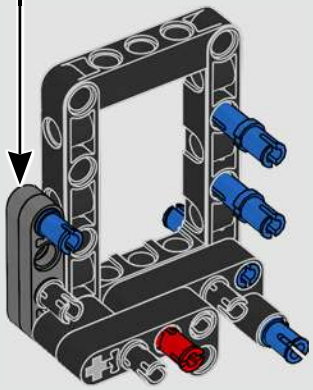

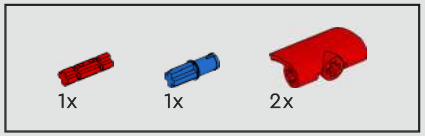

383

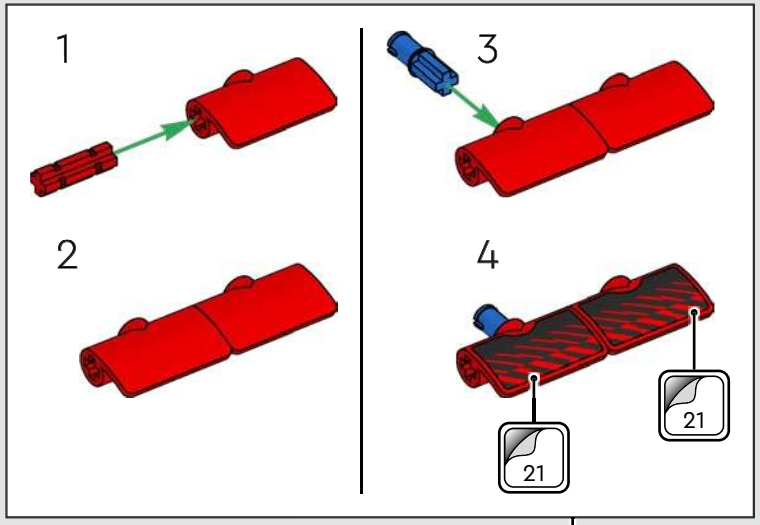

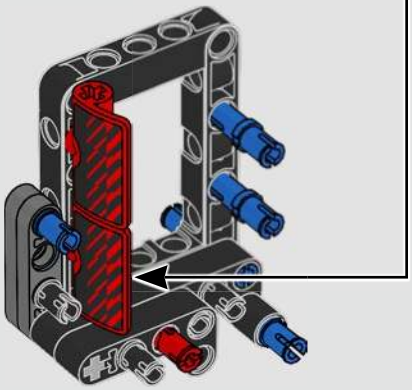

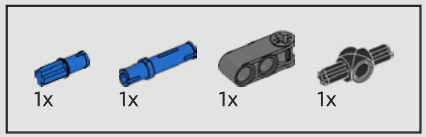

384

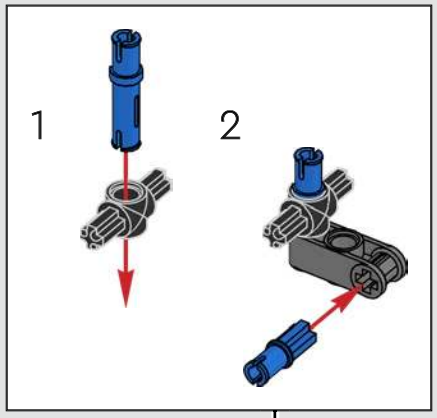

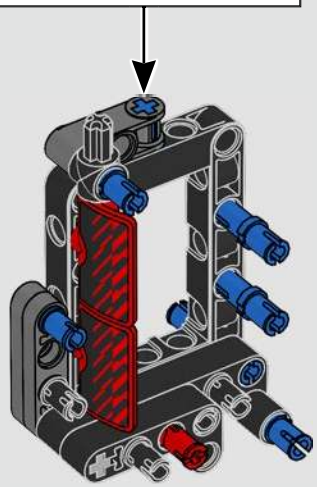

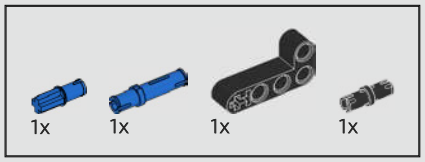

385

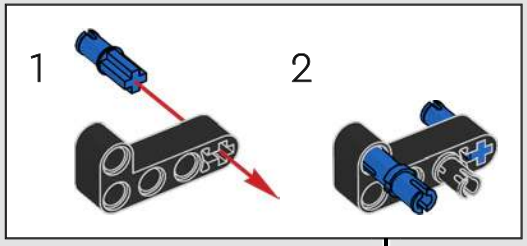

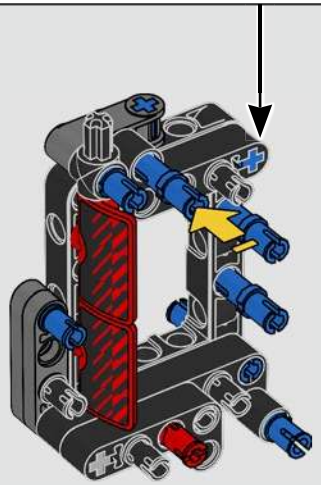

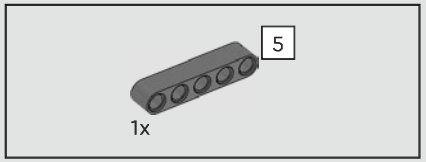

386

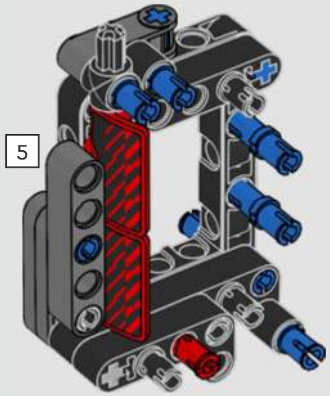

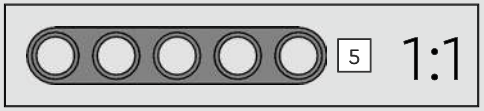

387

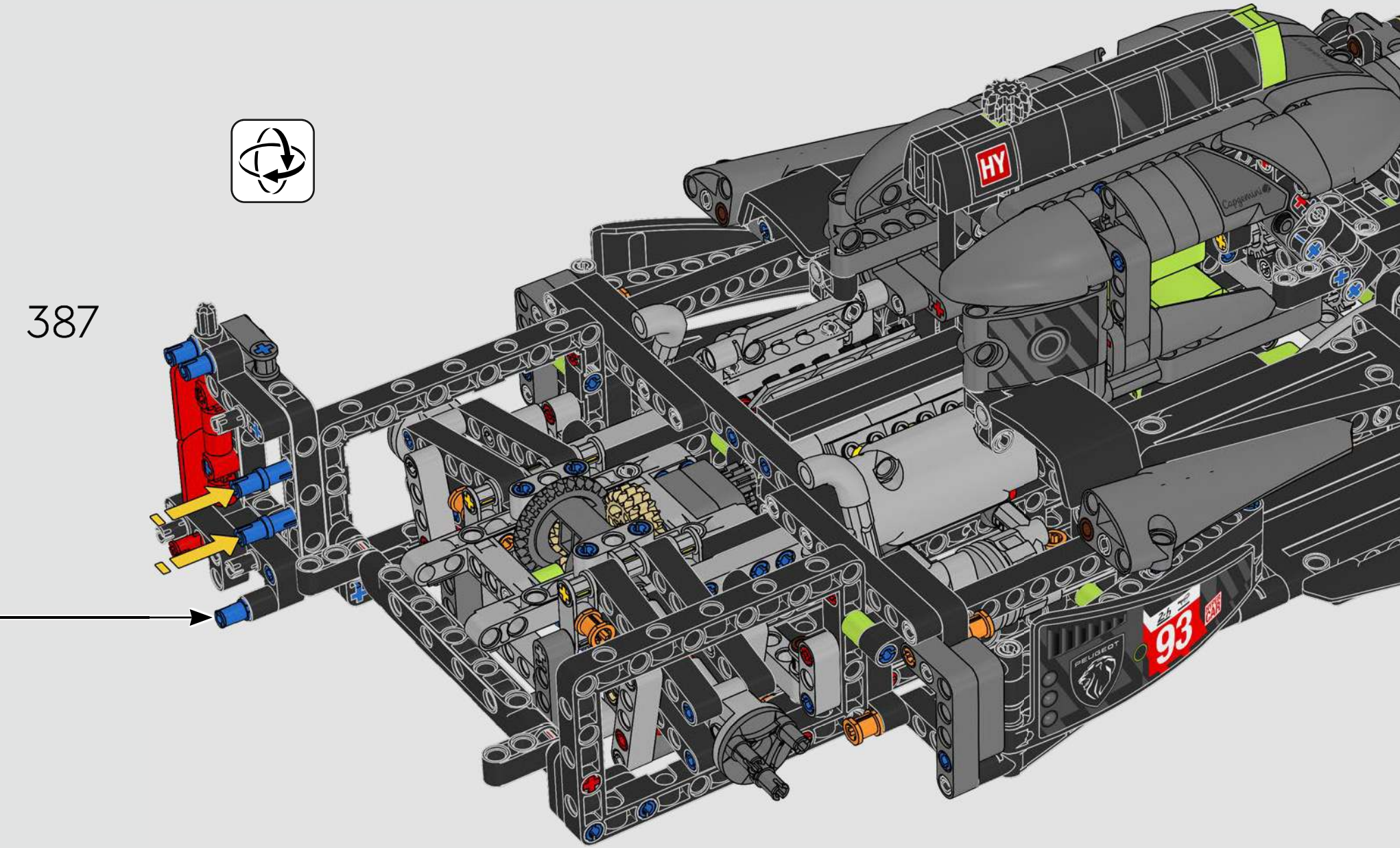

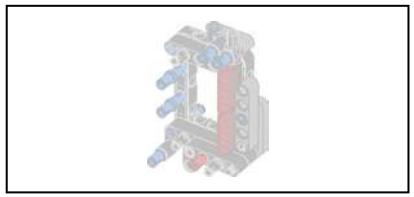

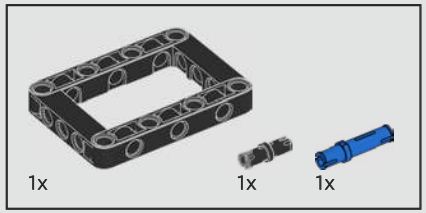

388

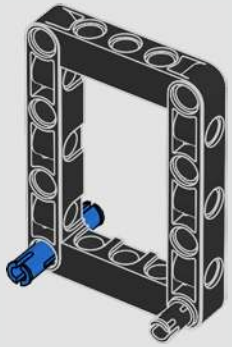

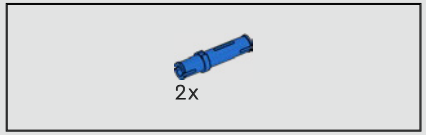

389

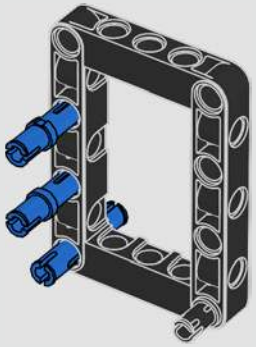

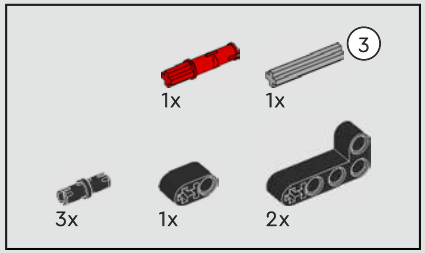

390

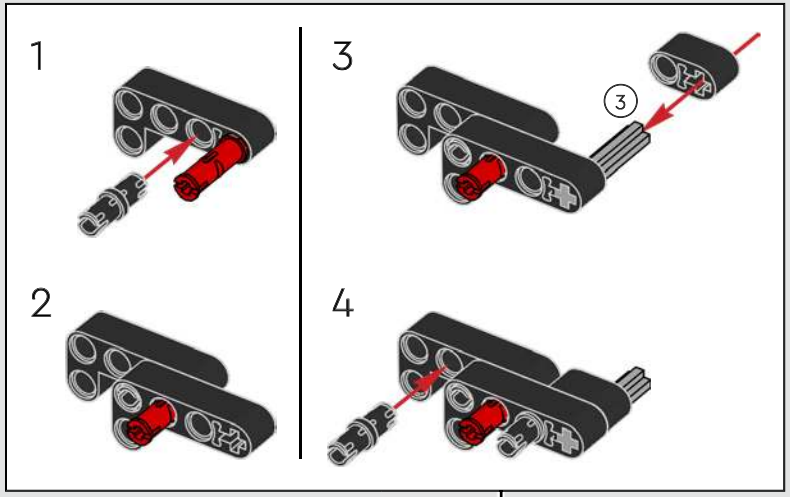

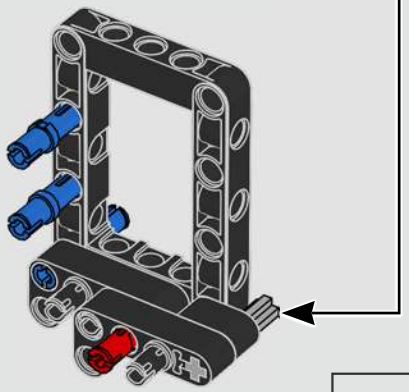

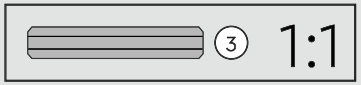

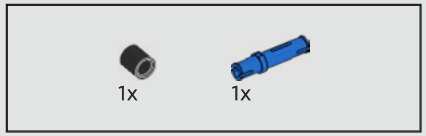

391

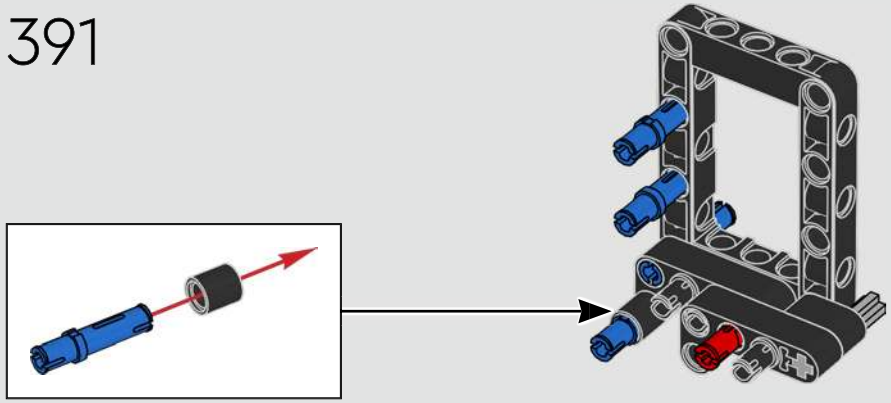

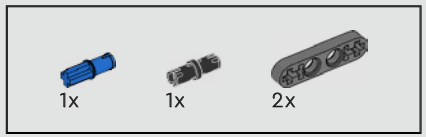

392

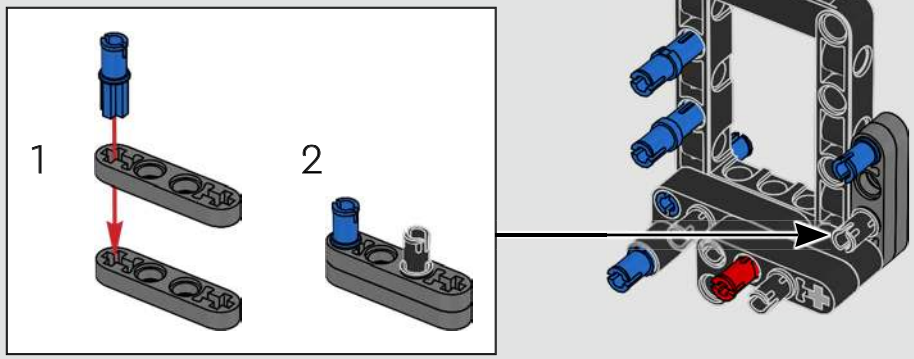

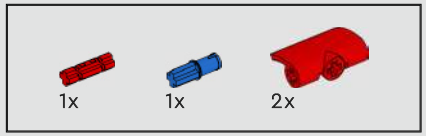

393

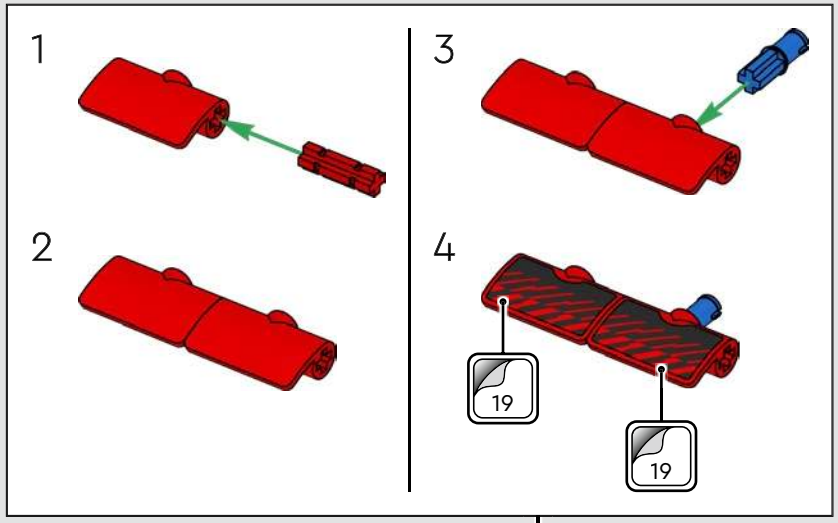

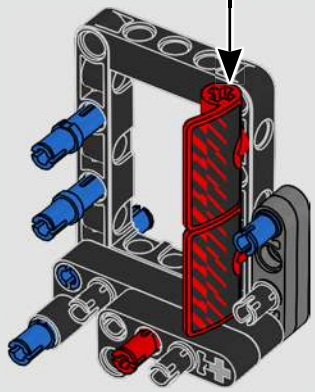

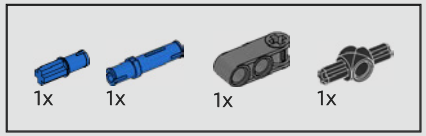

394

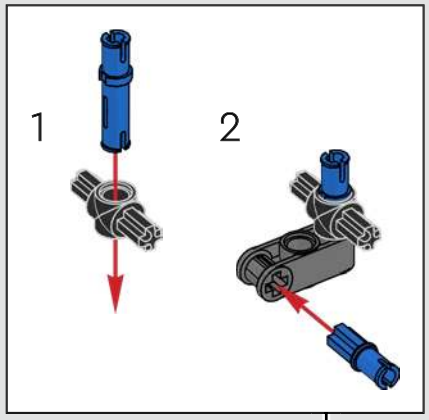

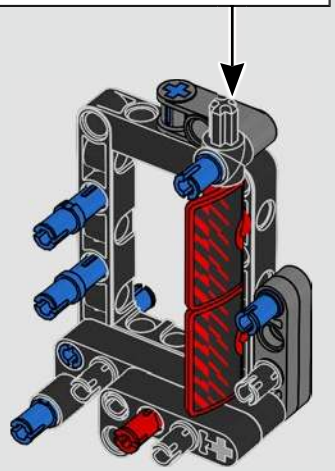

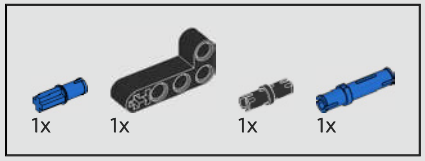

395

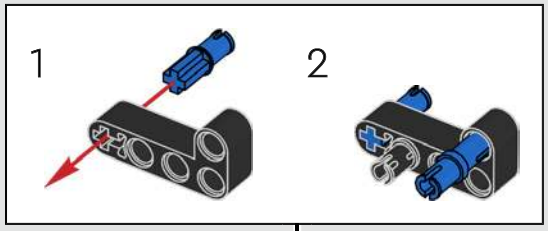

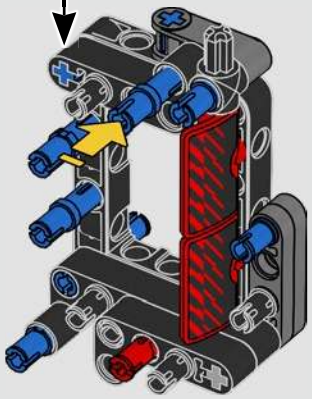

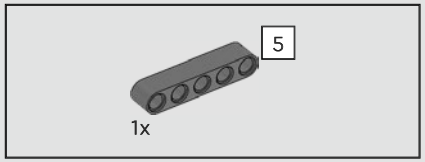

396

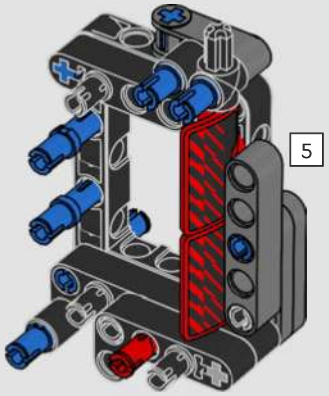

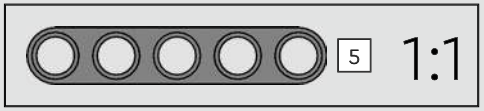

397

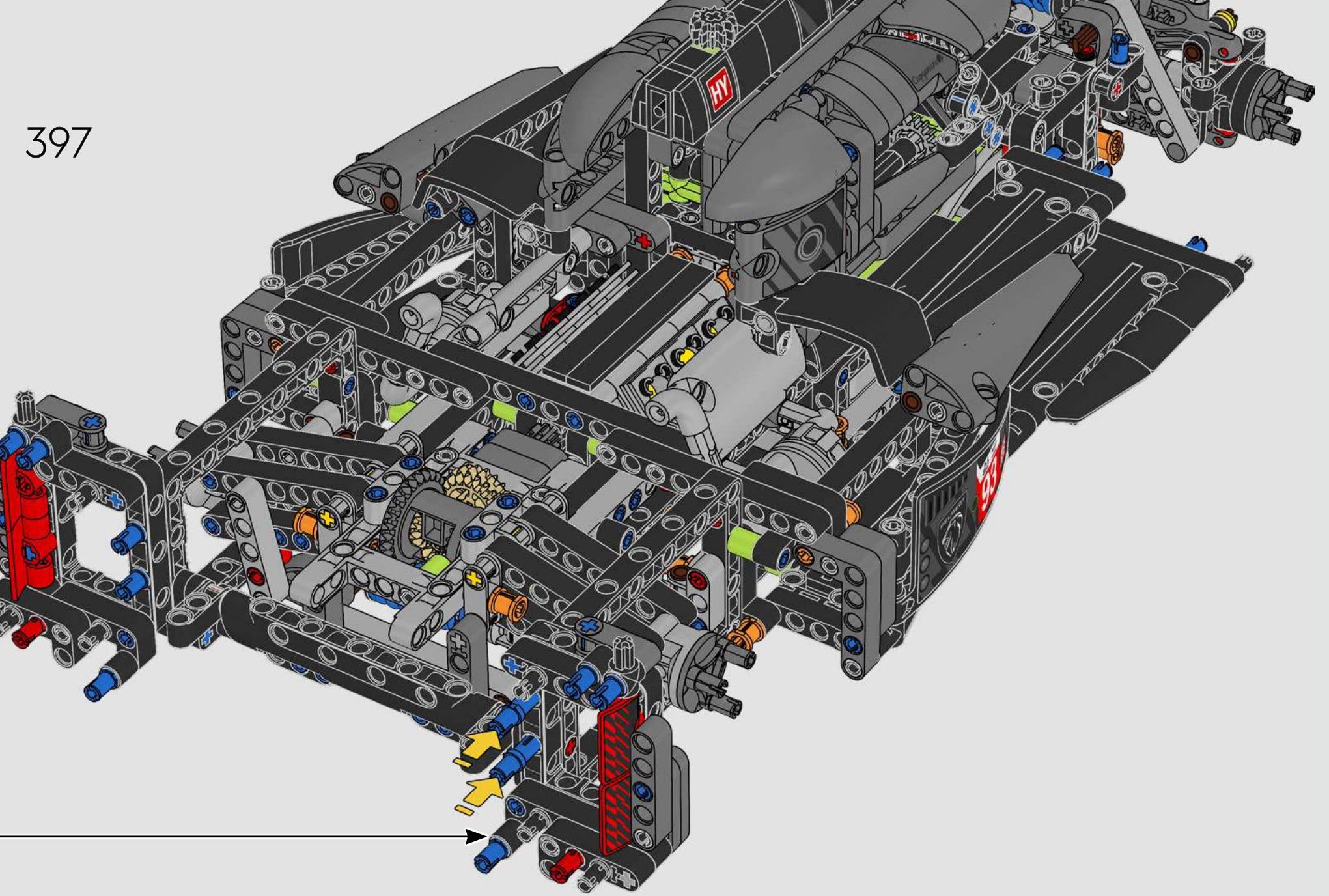

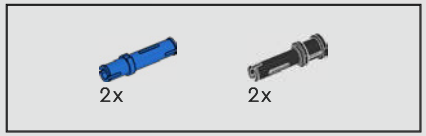

398

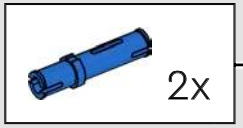

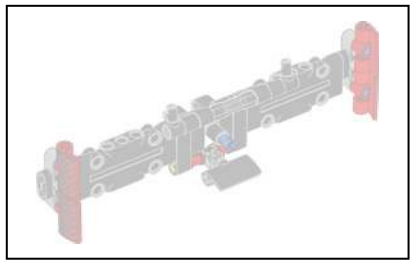

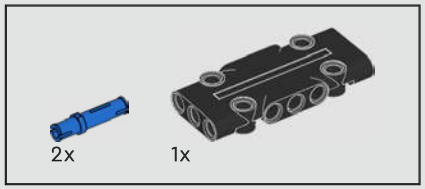

399

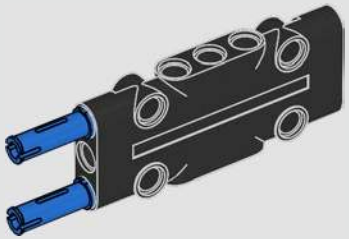

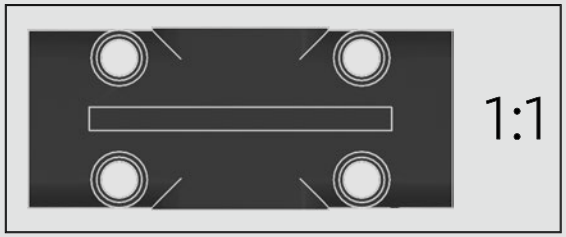

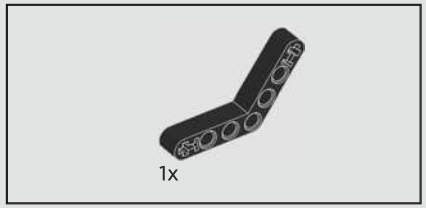

400

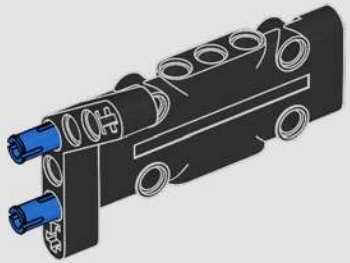

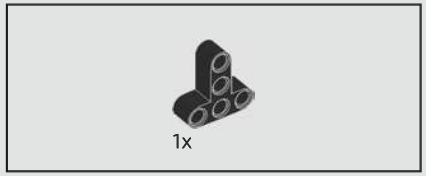

401

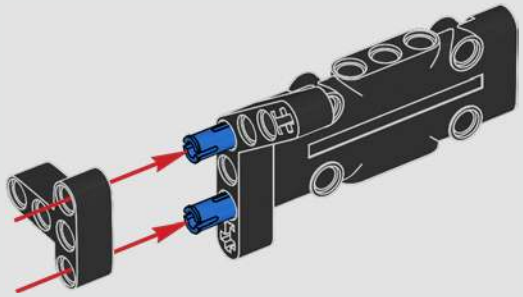

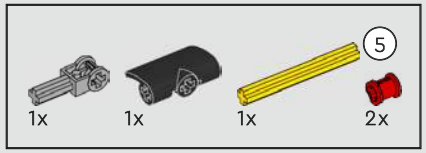

402

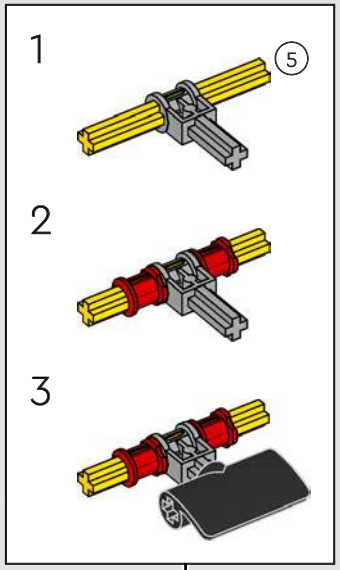

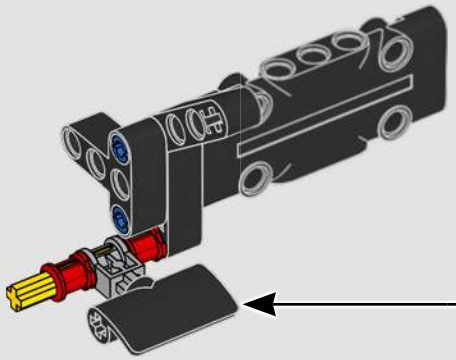

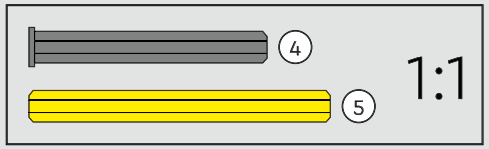

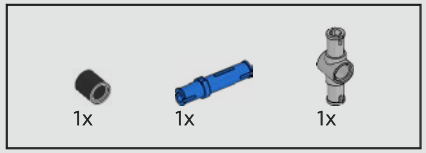

403

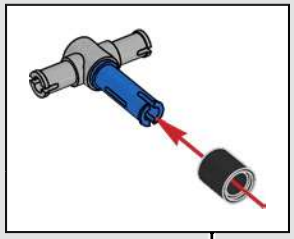

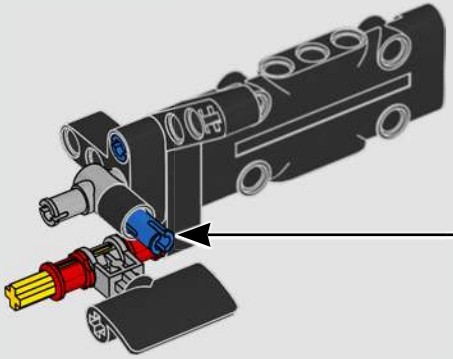

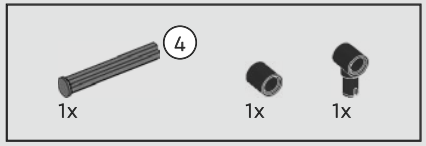

404

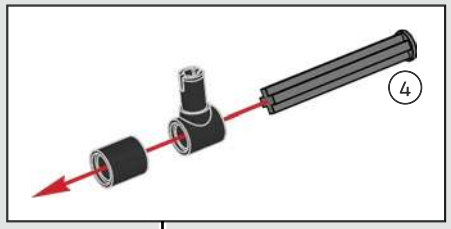

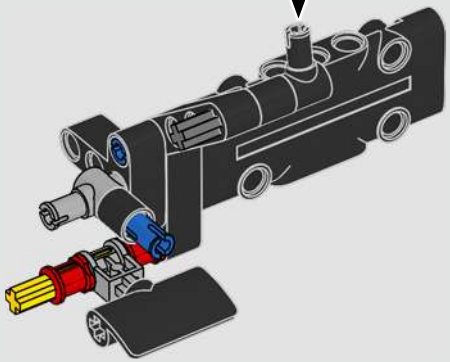

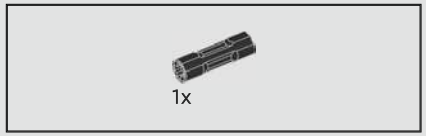

405

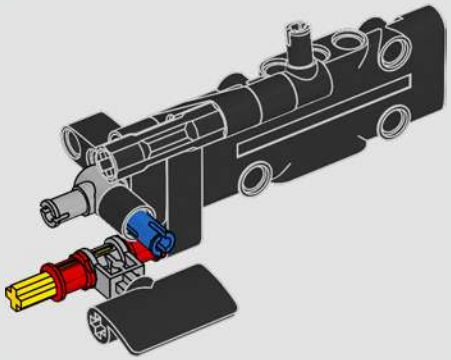

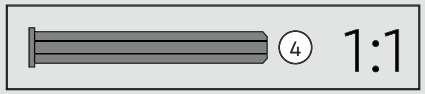

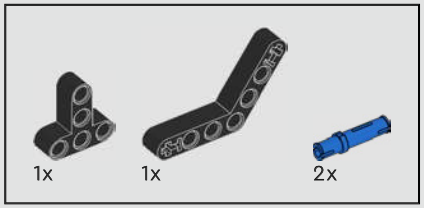

406

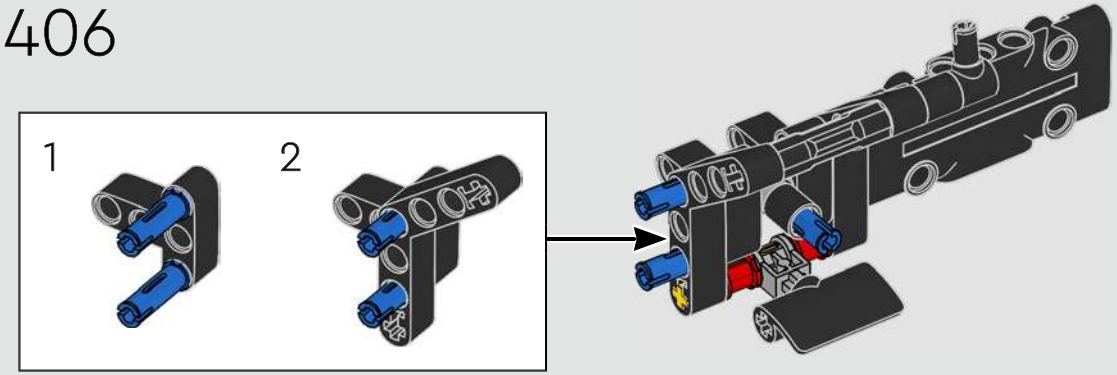

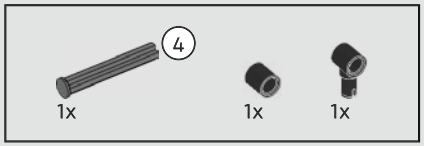

407

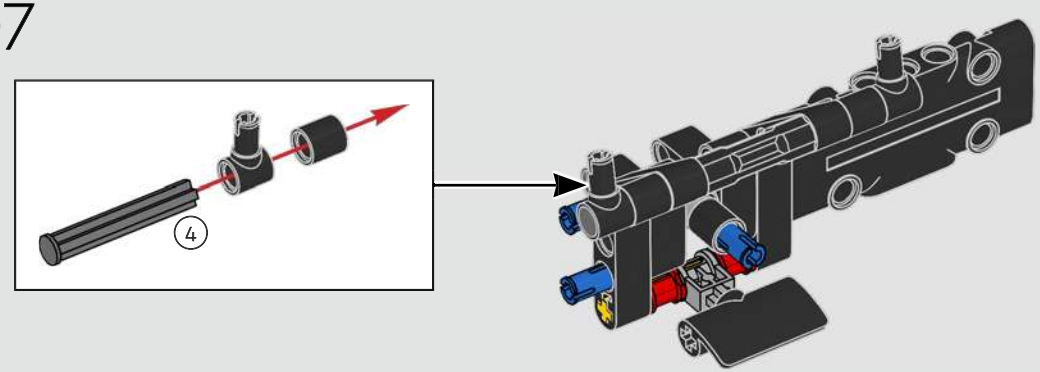

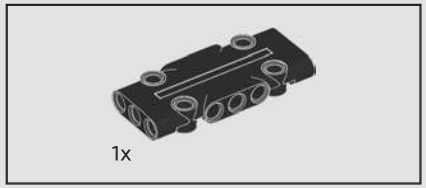

408

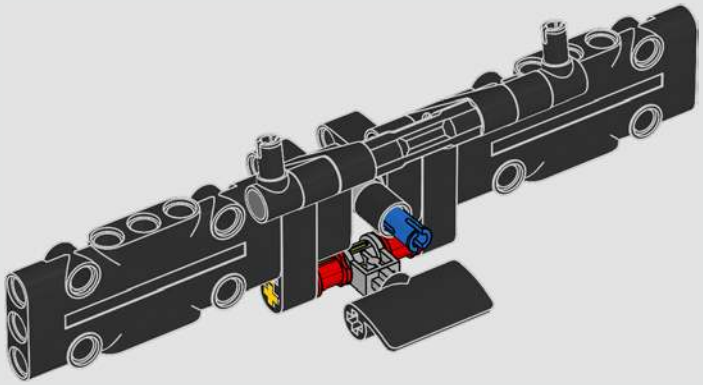

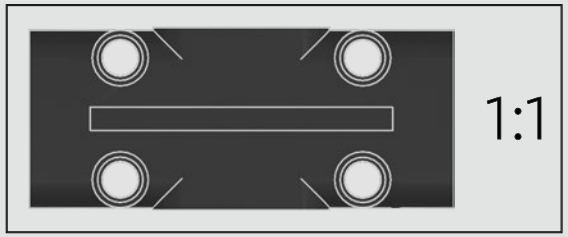

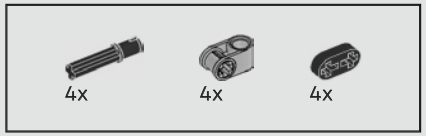

409

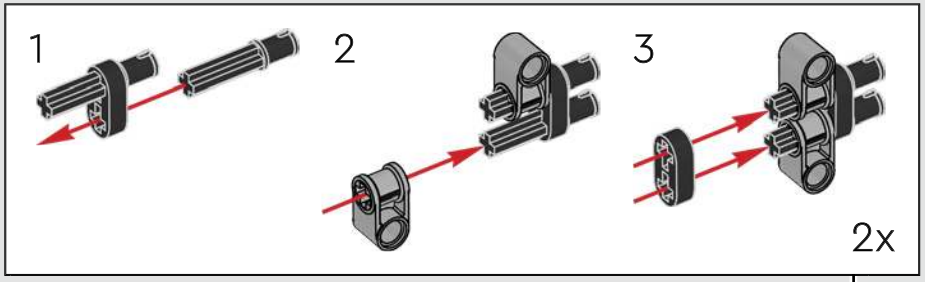

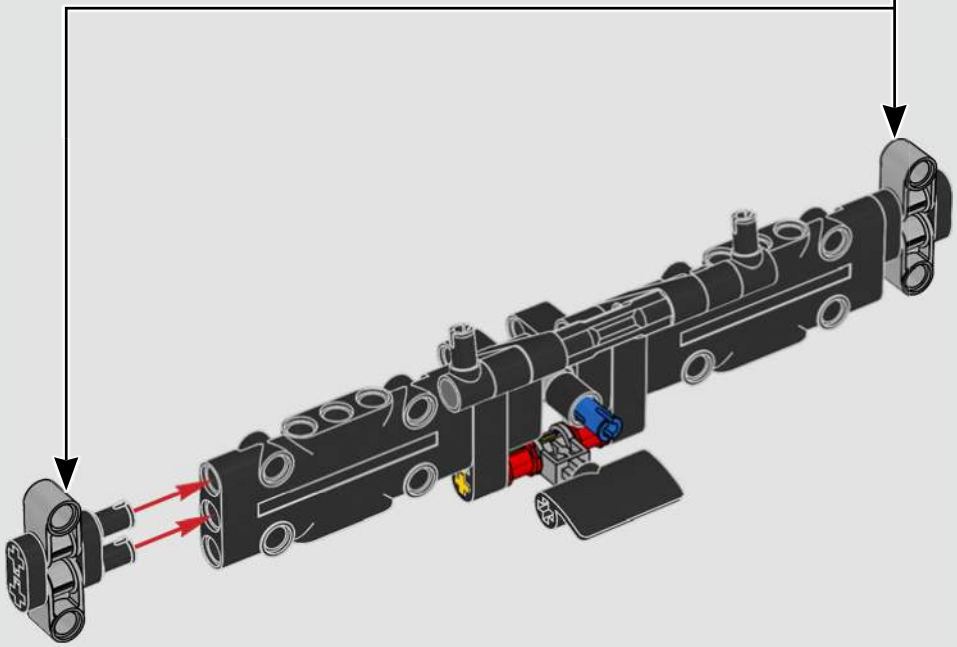

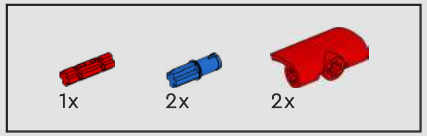

410

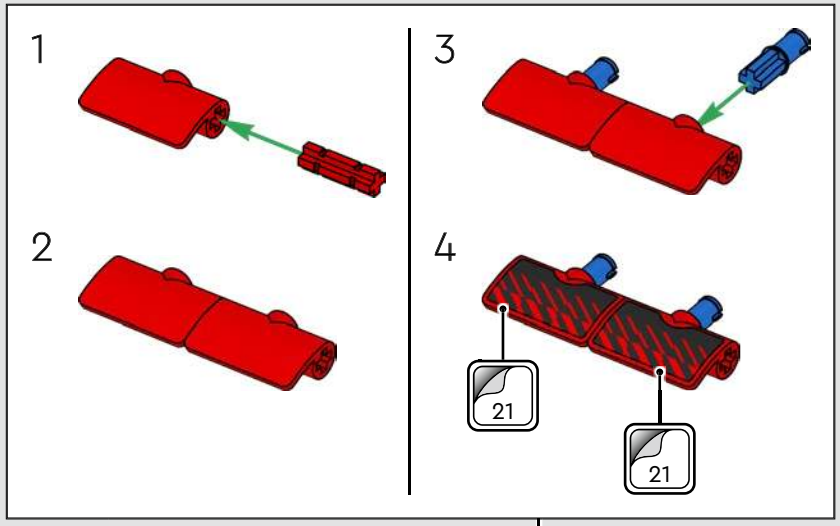

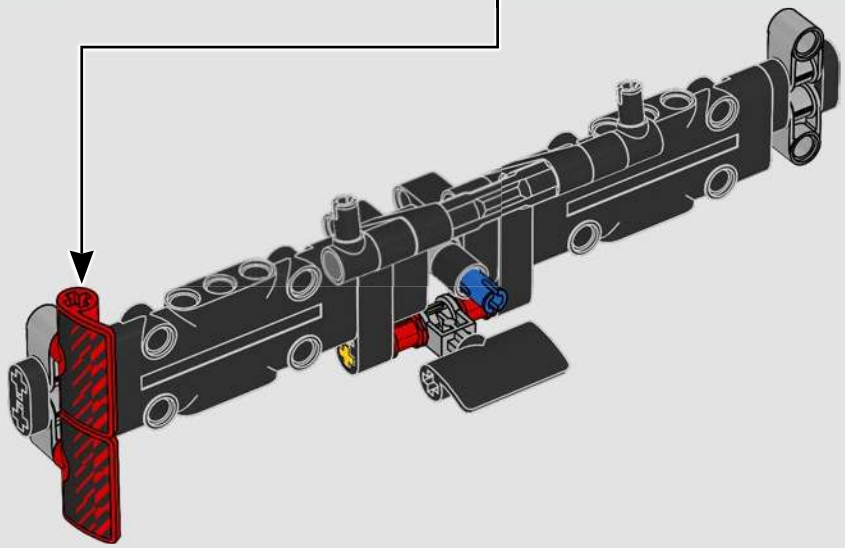

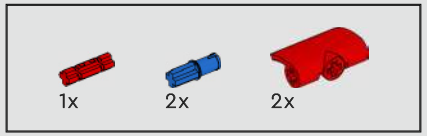

411

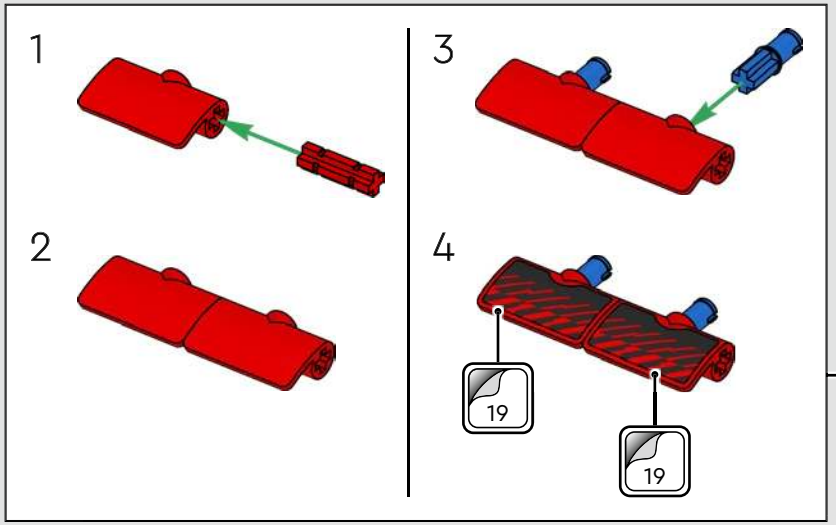

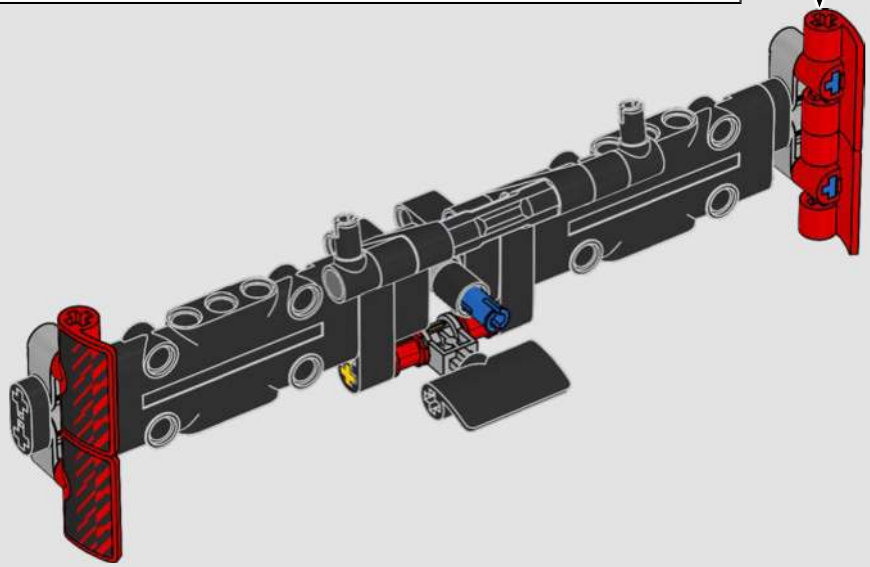

412

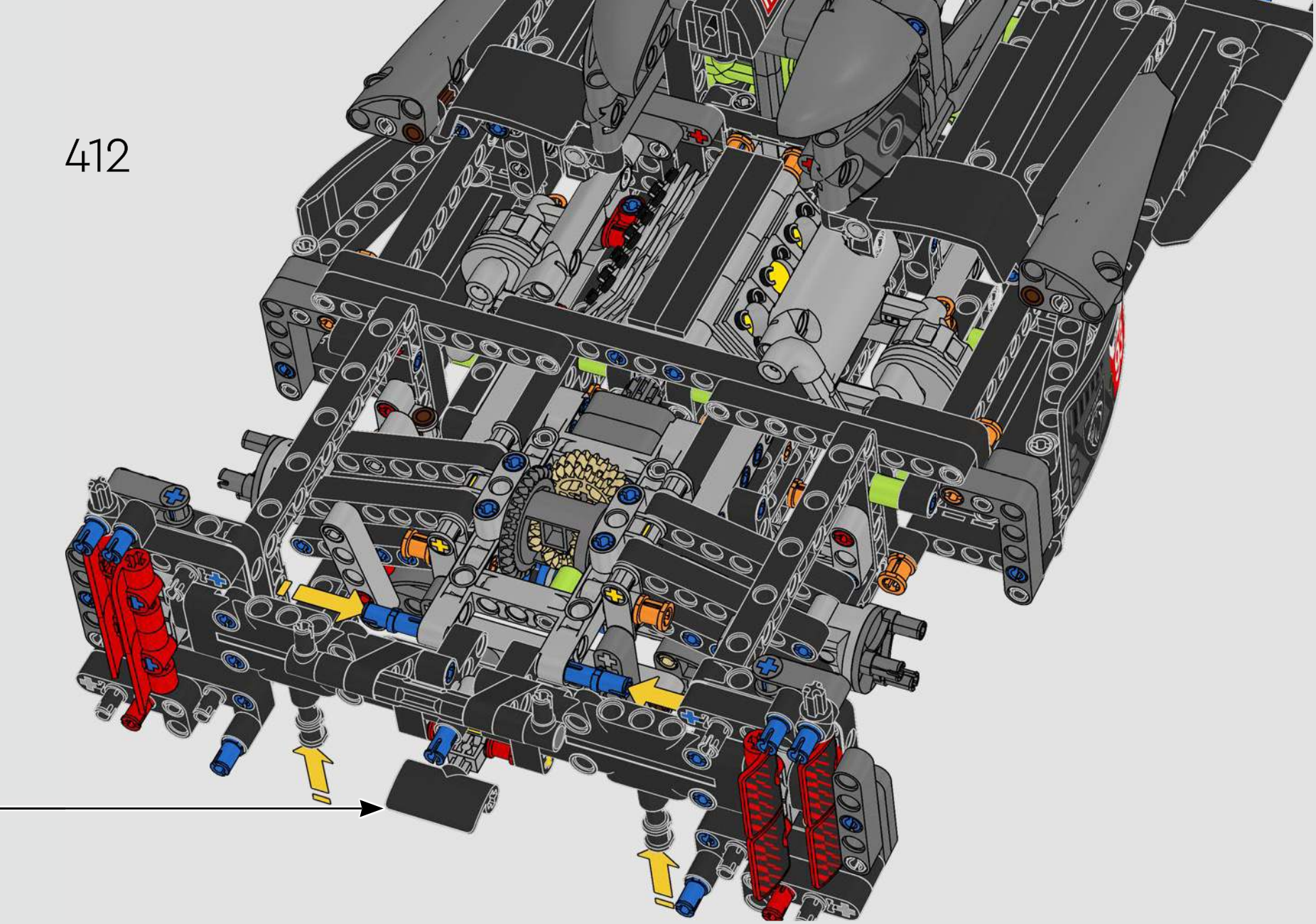

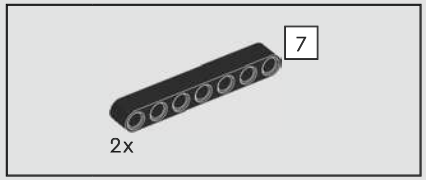

413

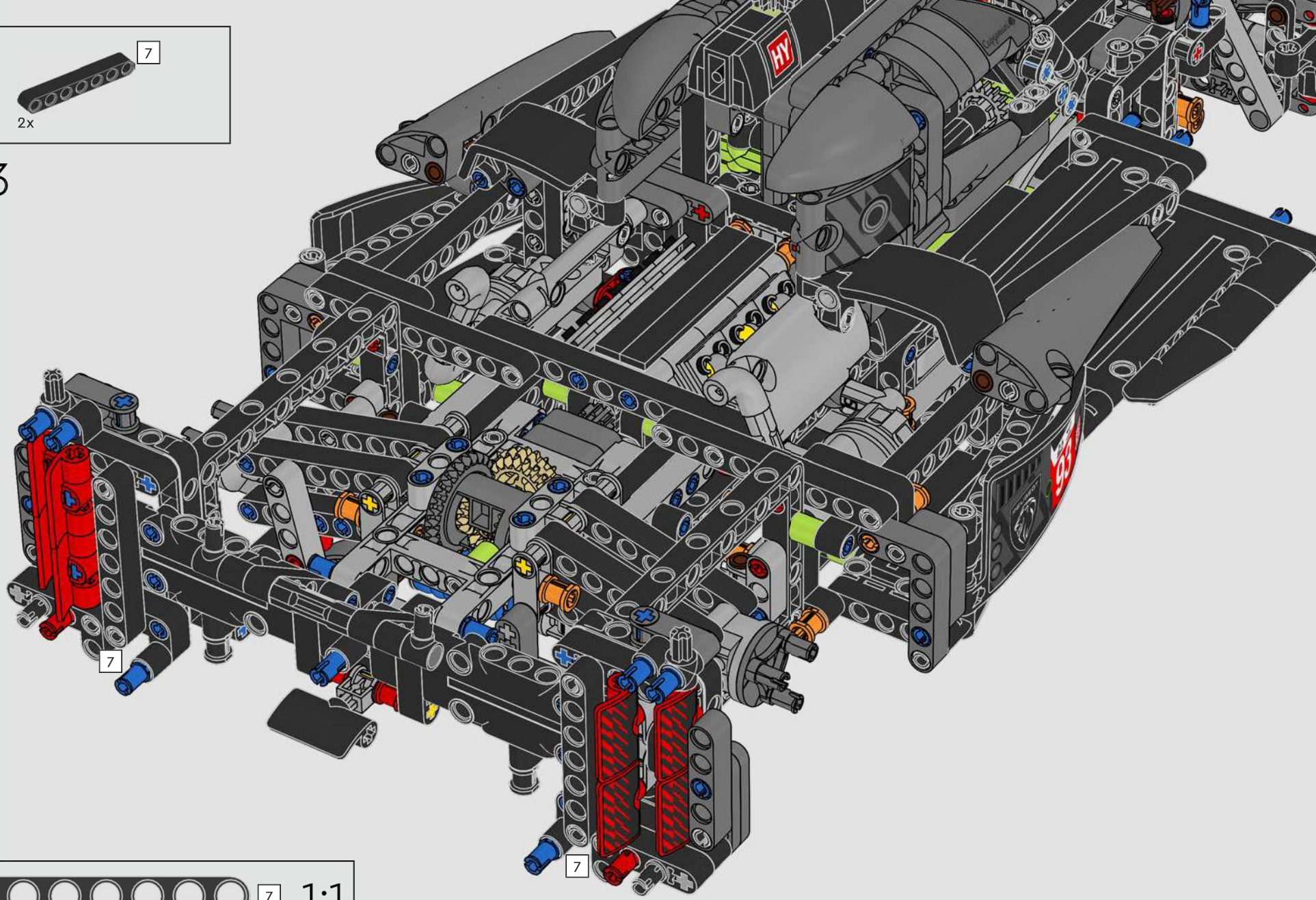

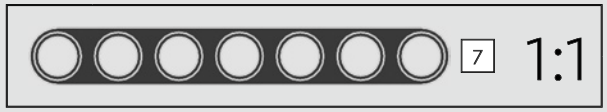

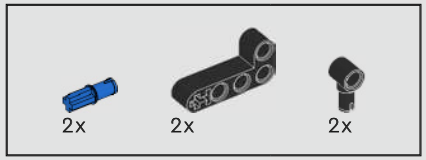

414

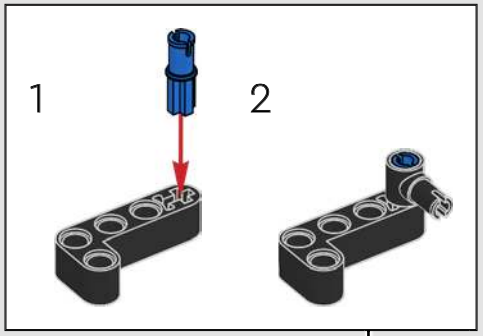

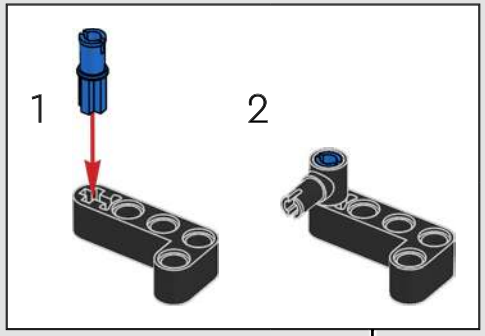

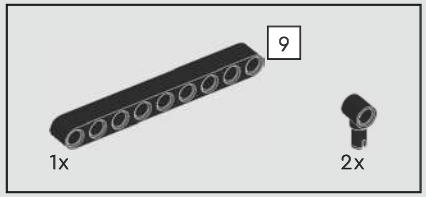

415

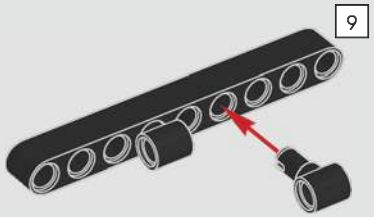

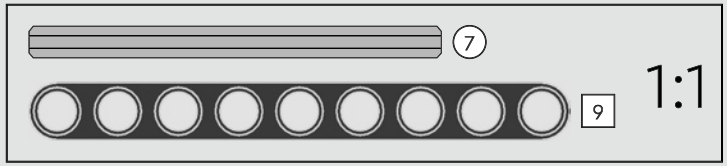

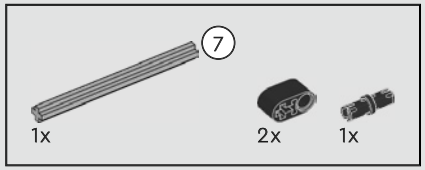

416

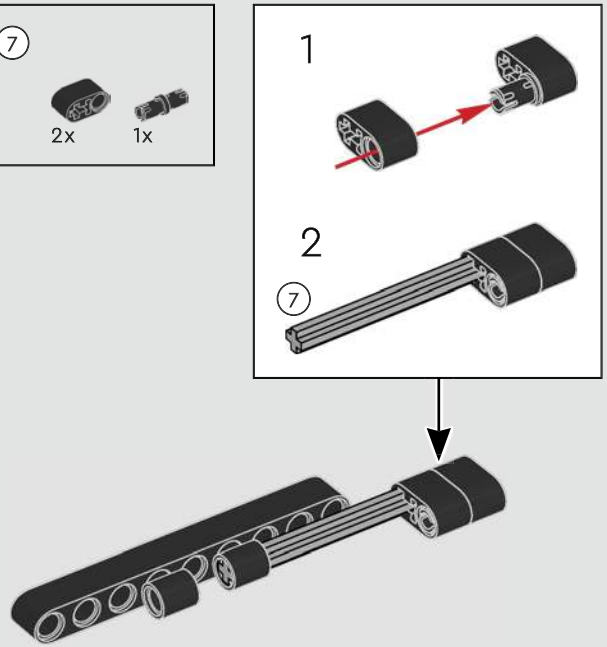

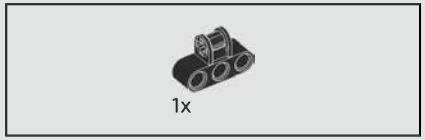

417

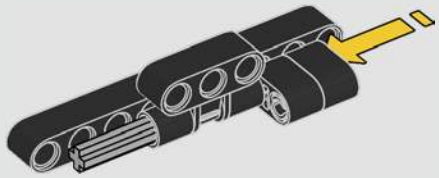

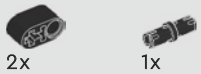

418

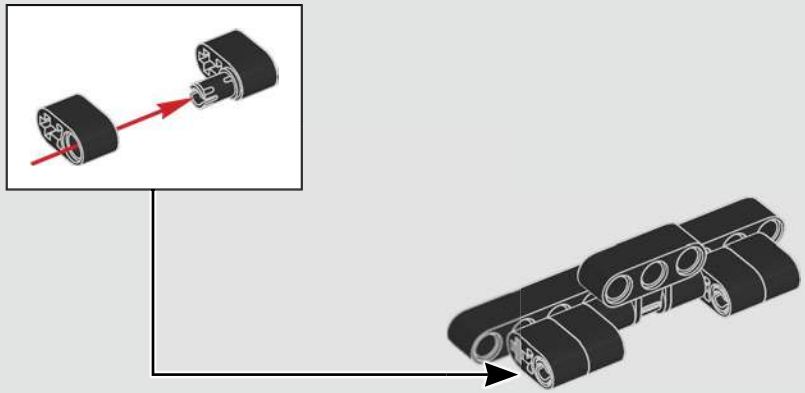

419

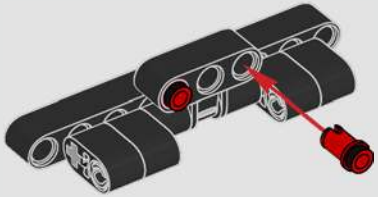

420

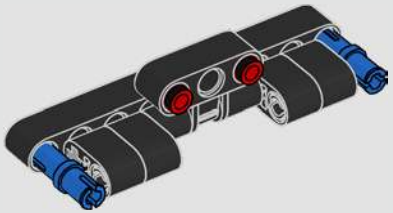

421

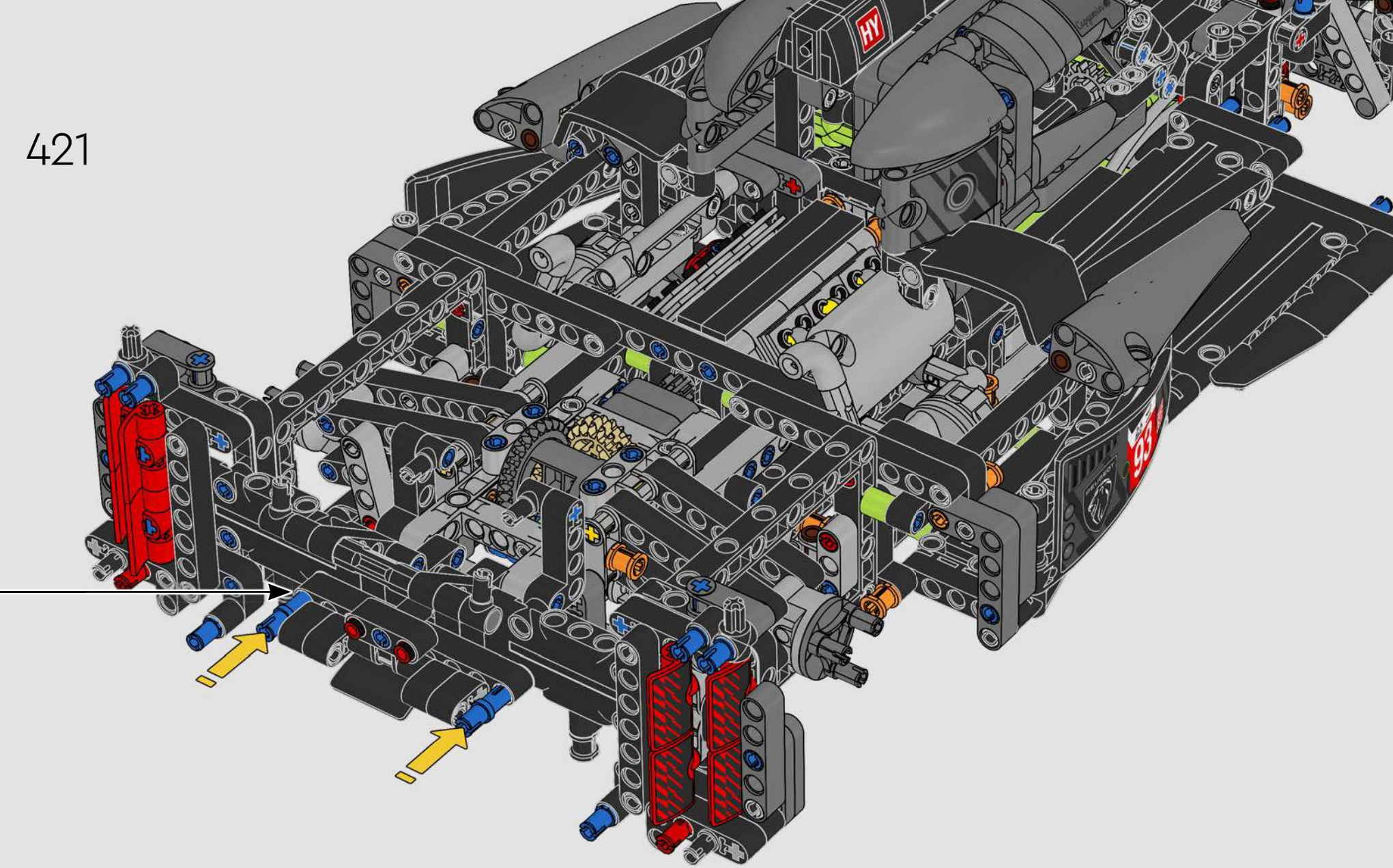

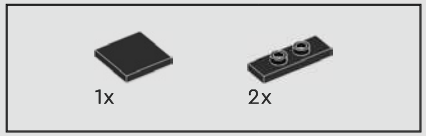

422

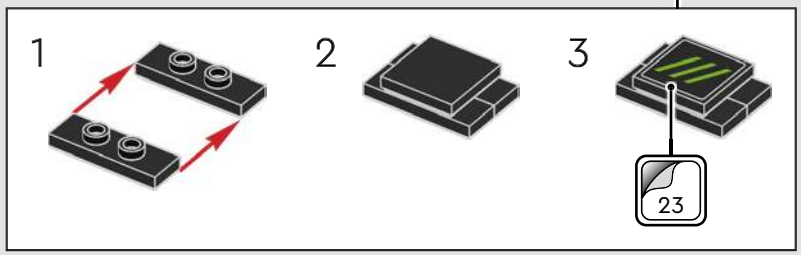

2x

423

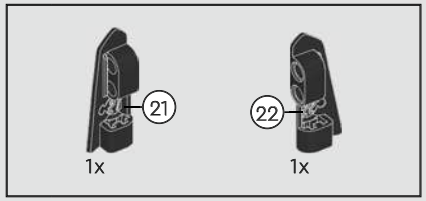

424

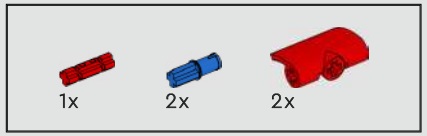

425

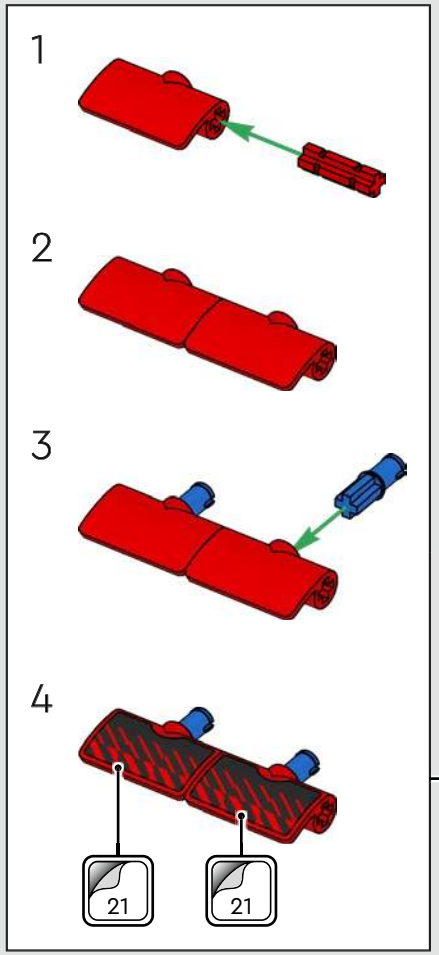

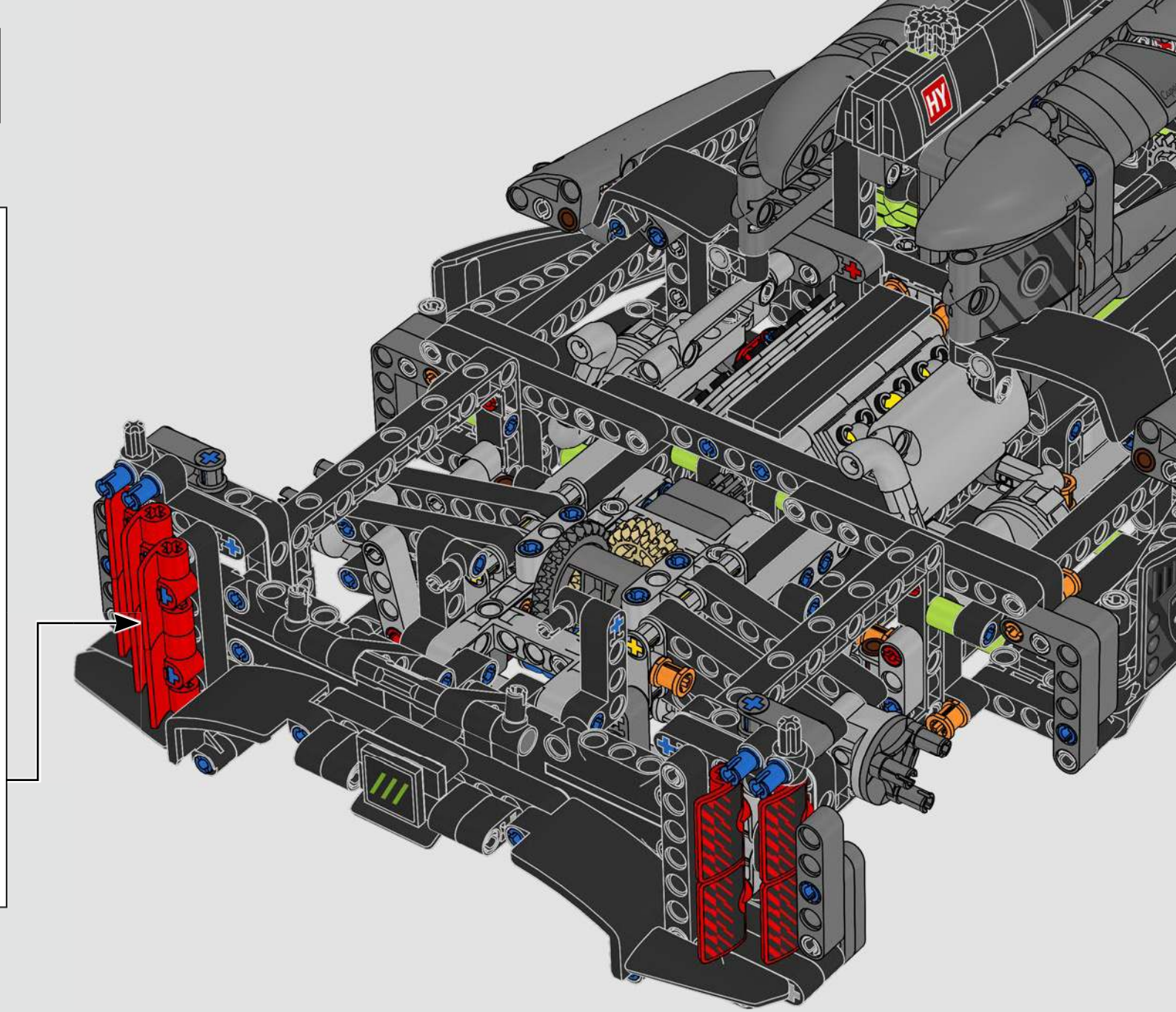

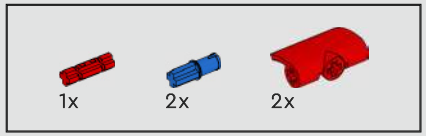

426

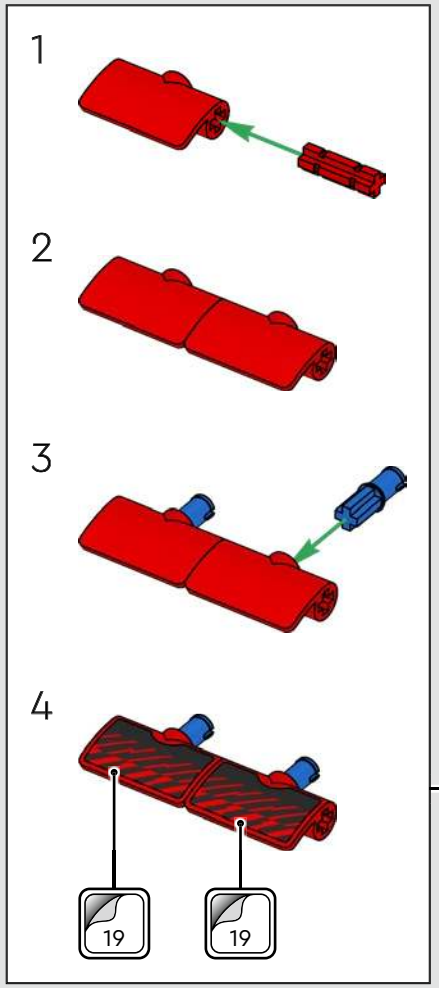

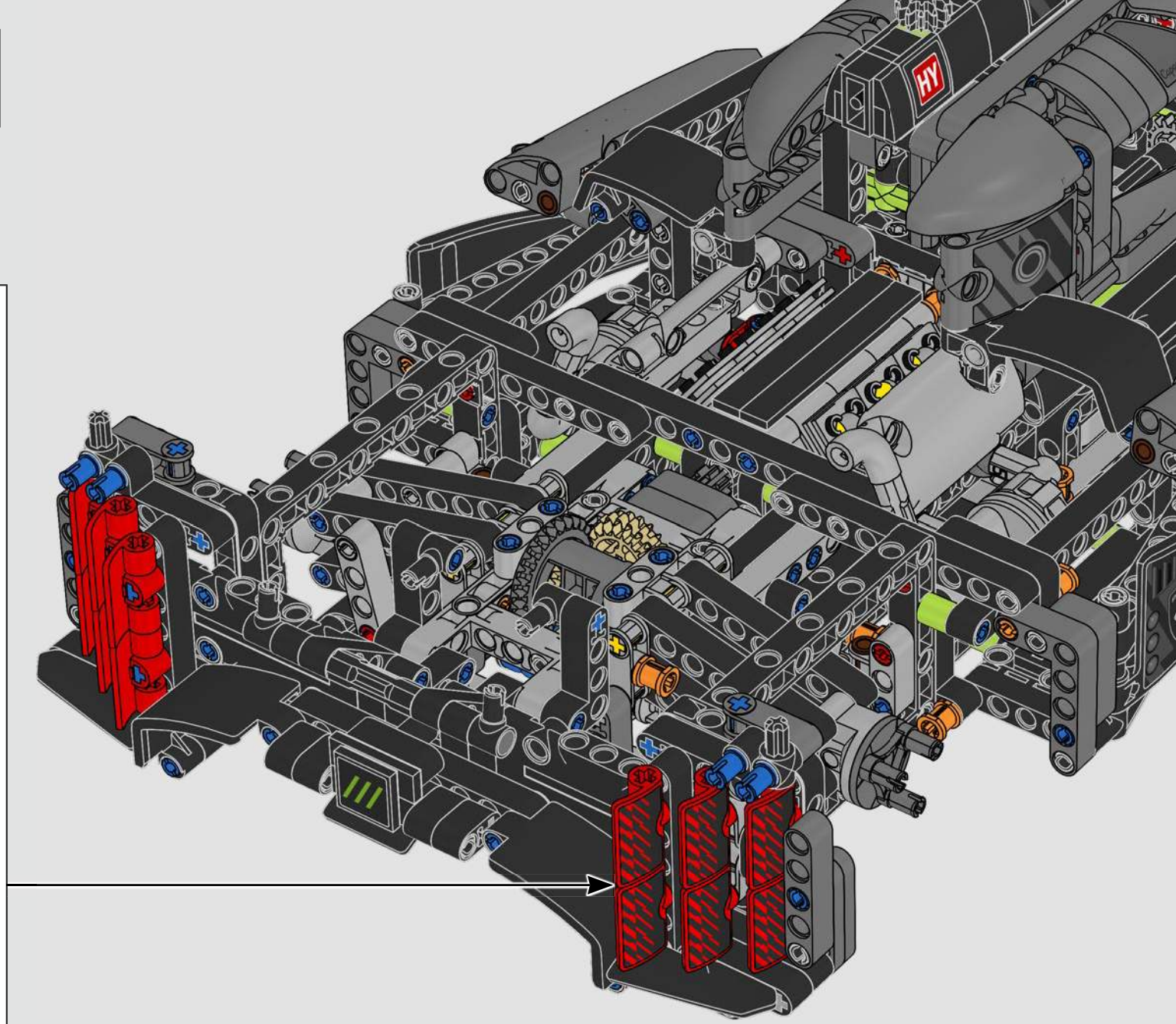

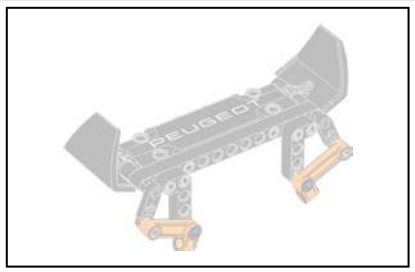

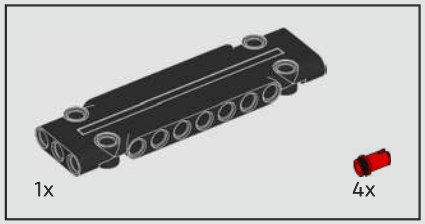

427

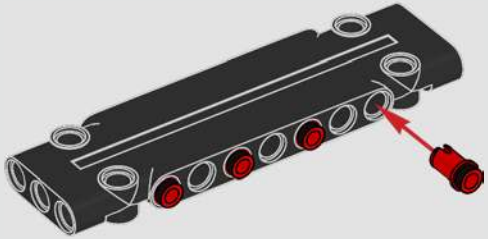

428

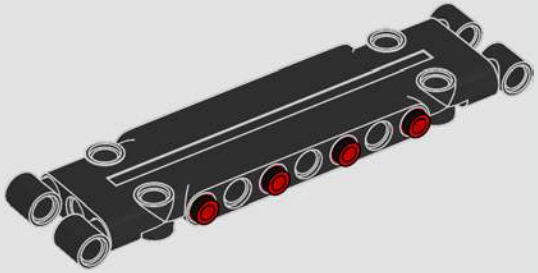

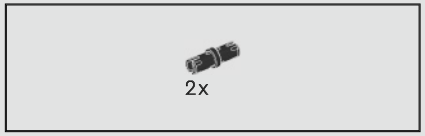

429

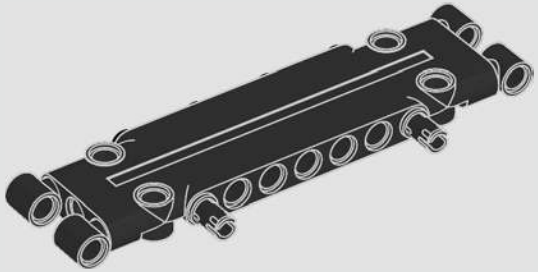

430

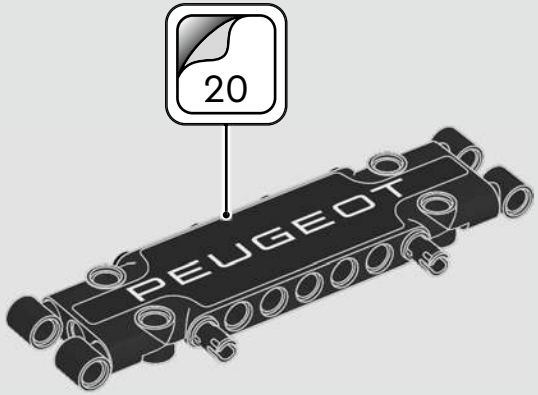

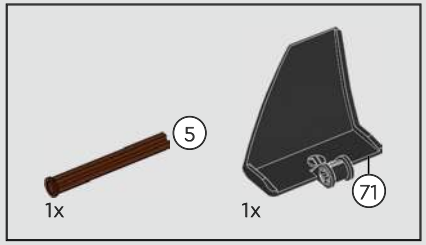

431

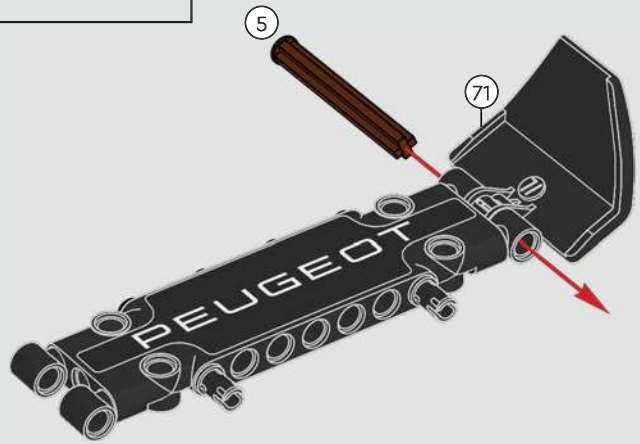

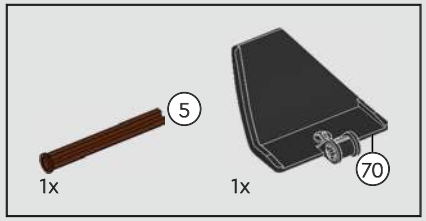

432

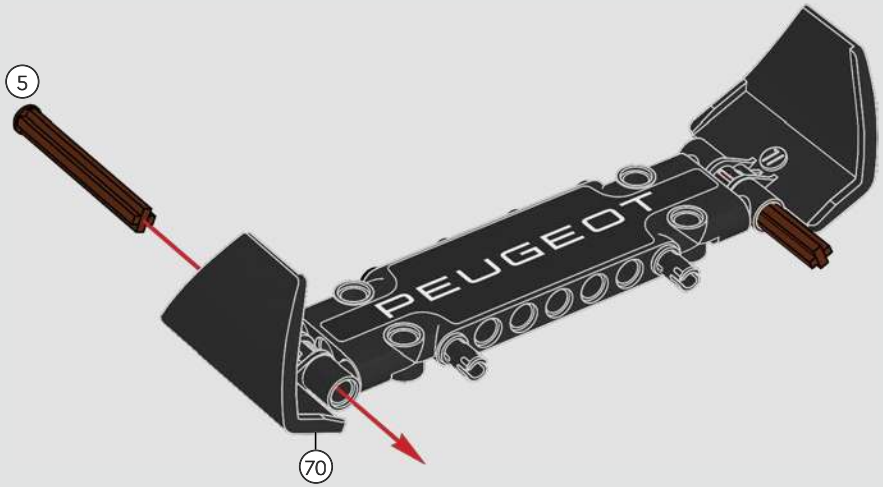

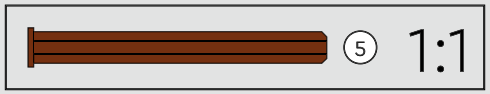

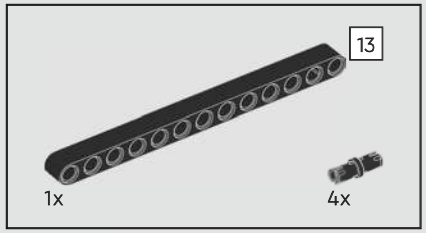

433

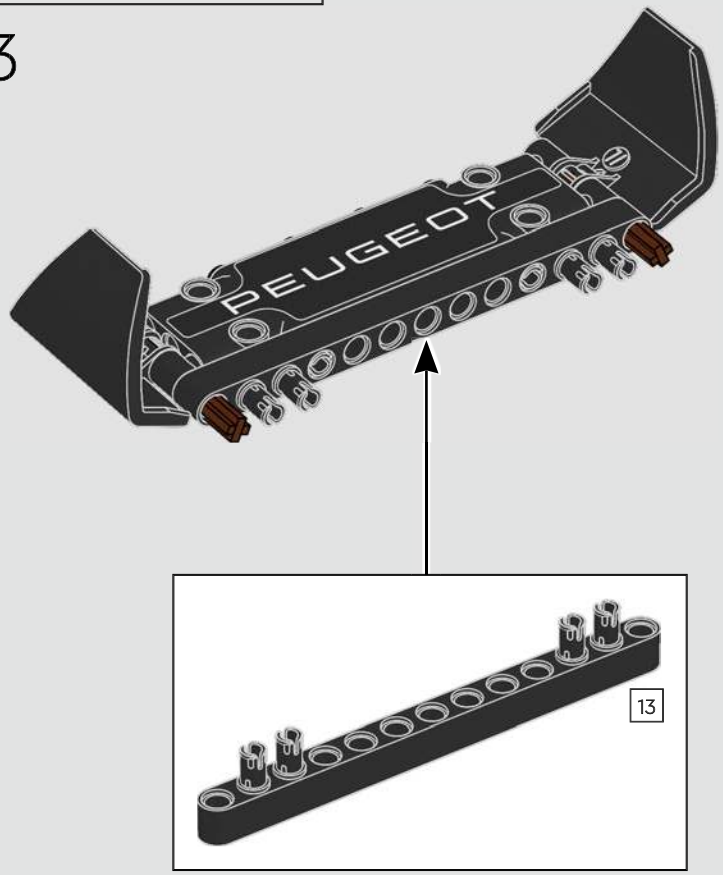

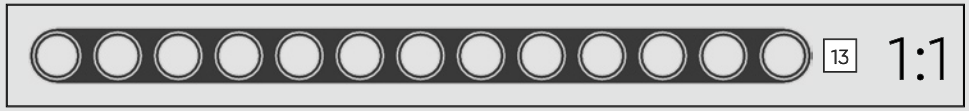

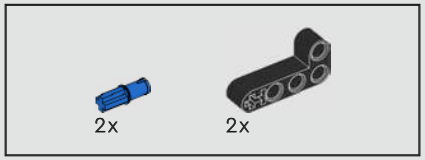

434

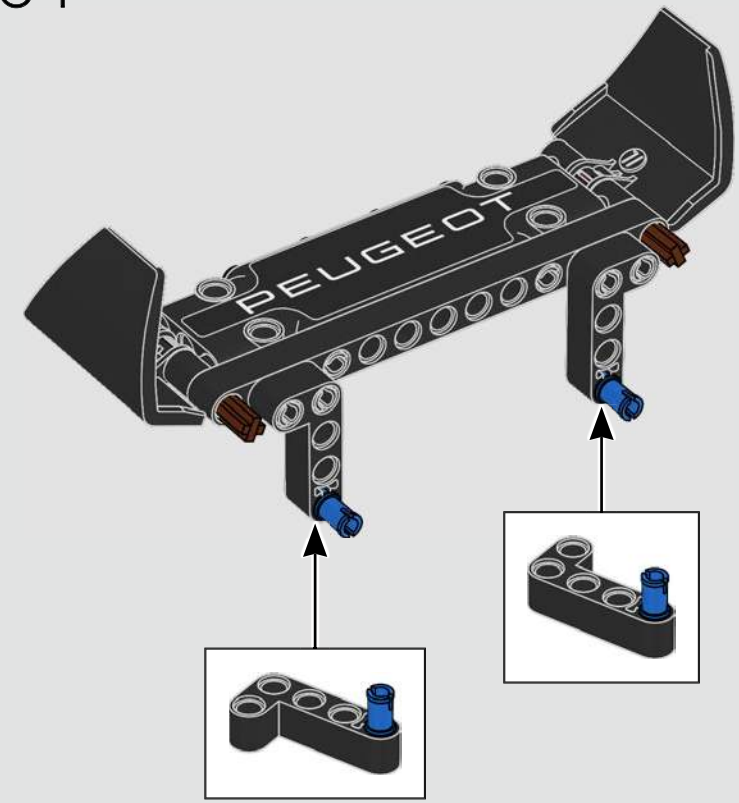

2x

435

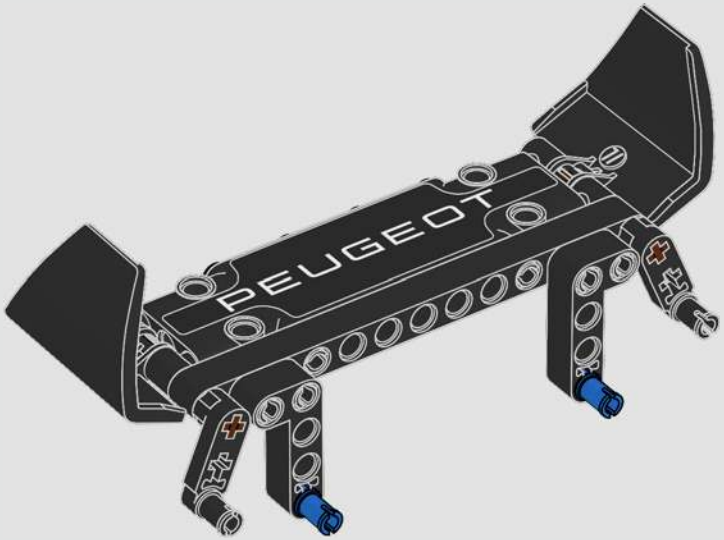

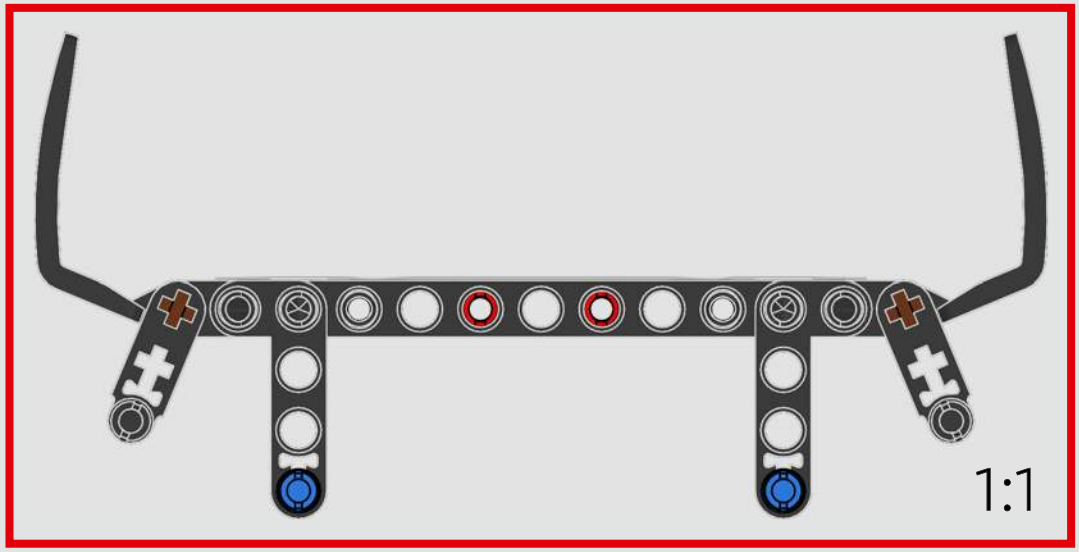

2x

436

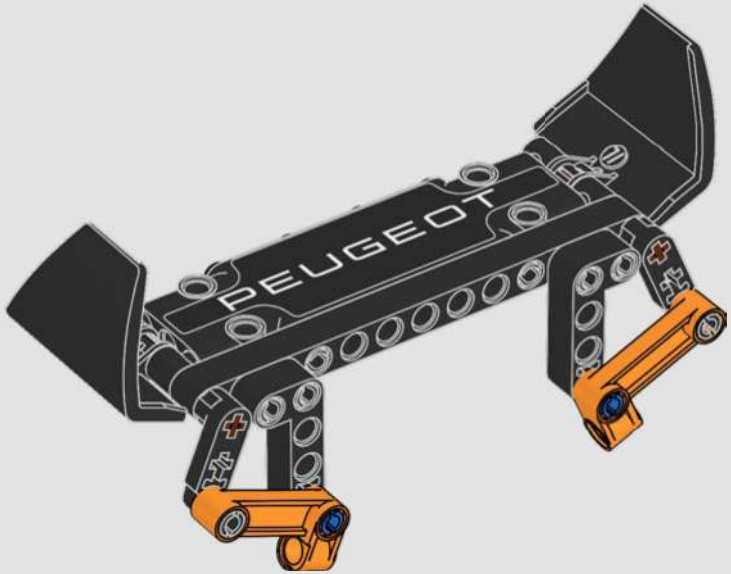

437

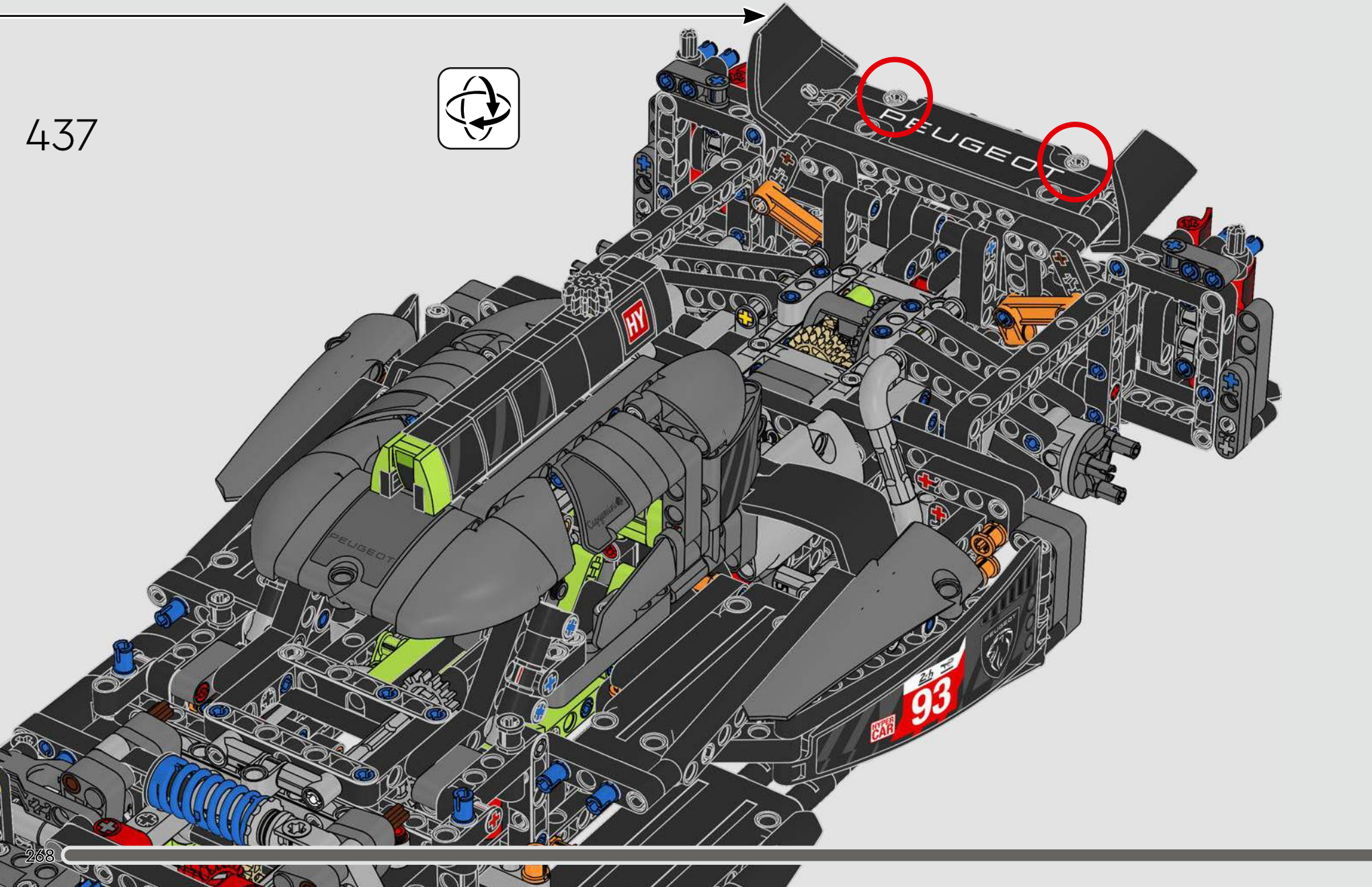

438

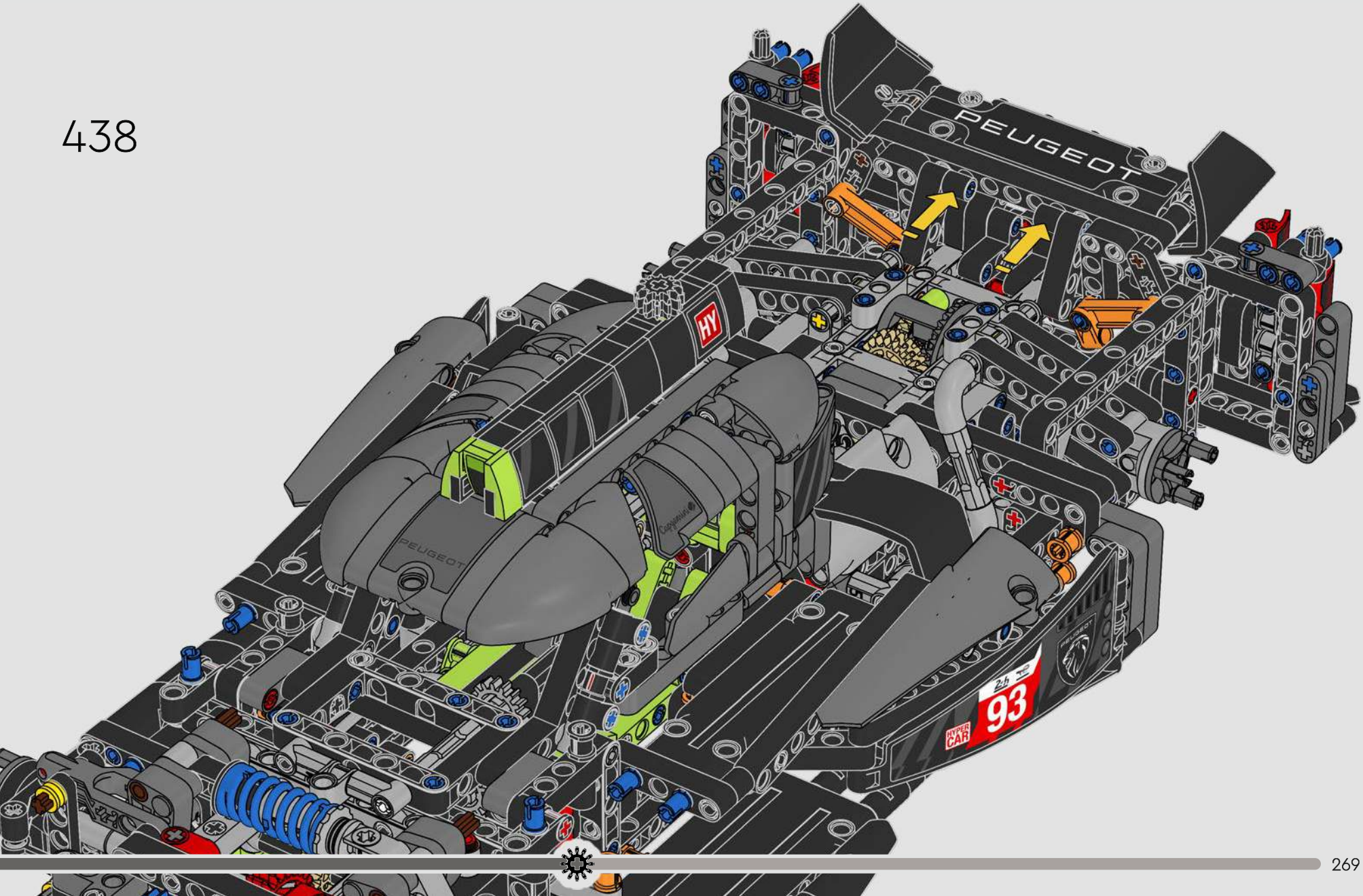

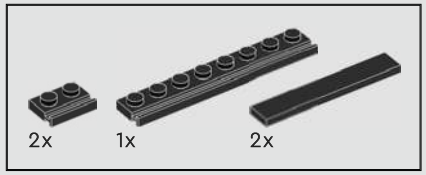

439

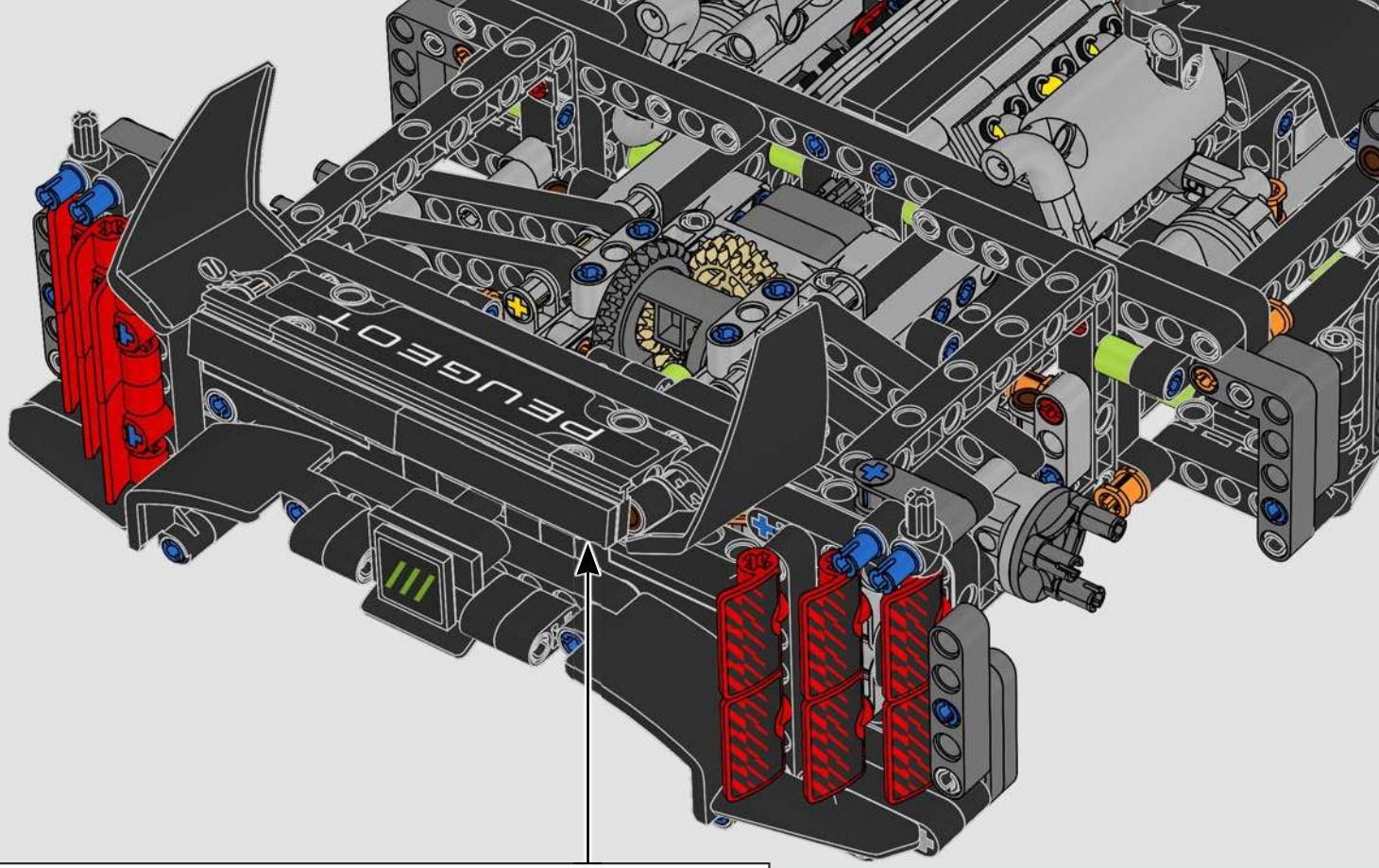

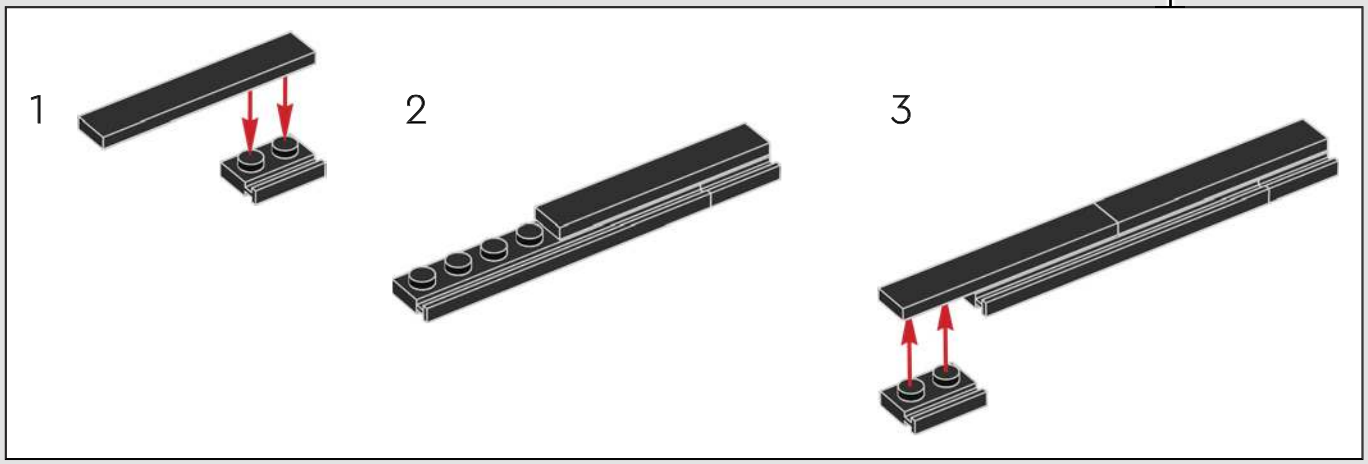

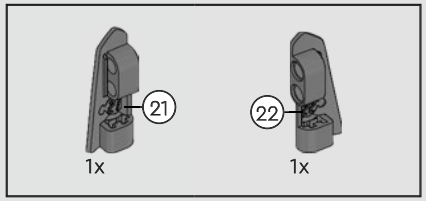

440

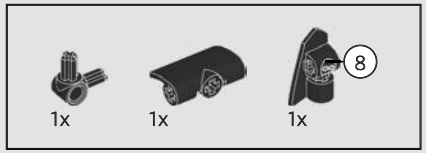

441

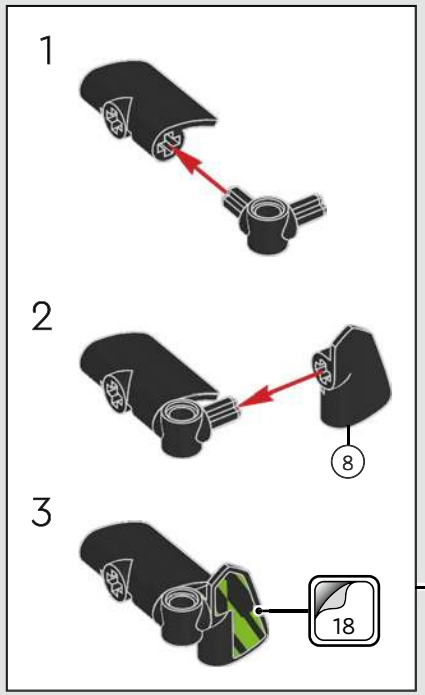

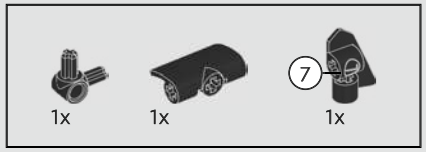

442

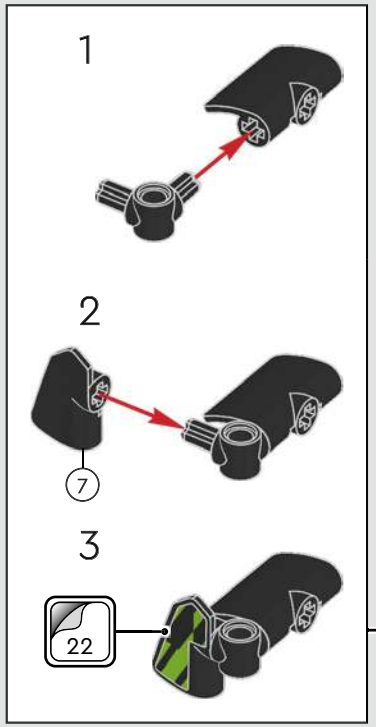

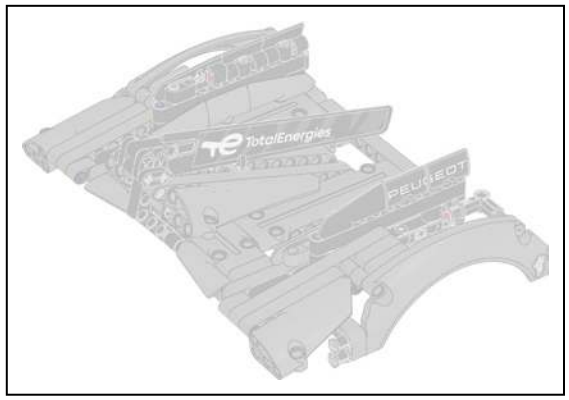

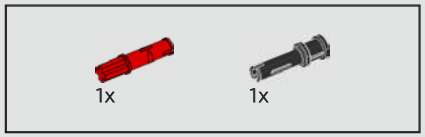

443

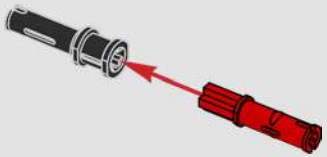

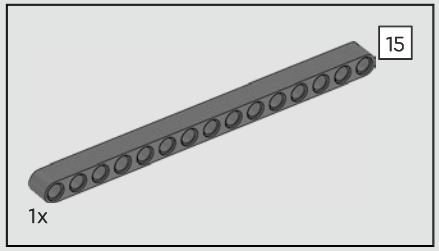

444

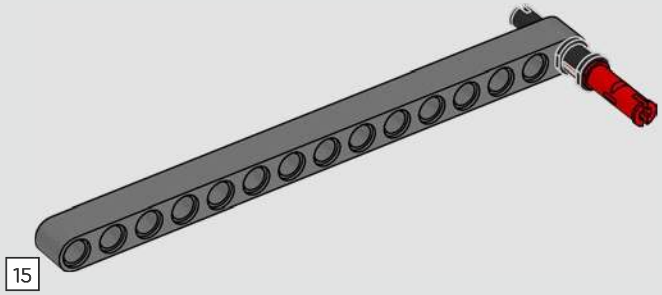

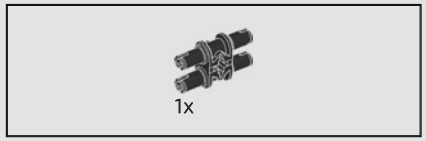

445

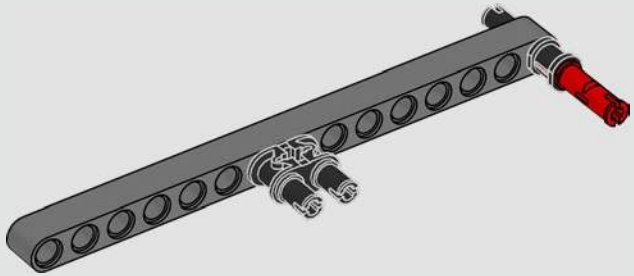

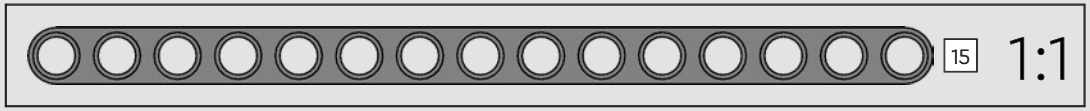

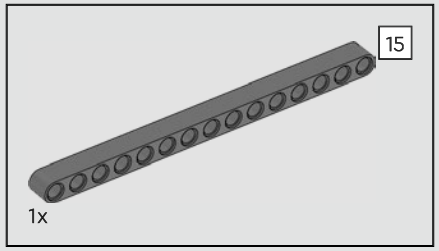

446

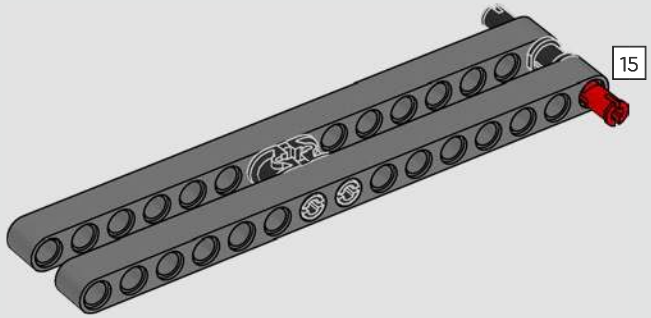

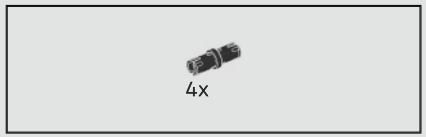

447

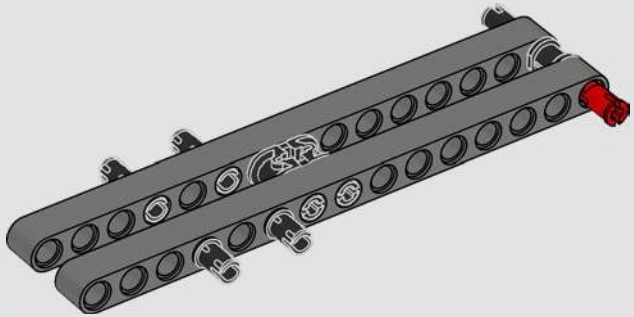

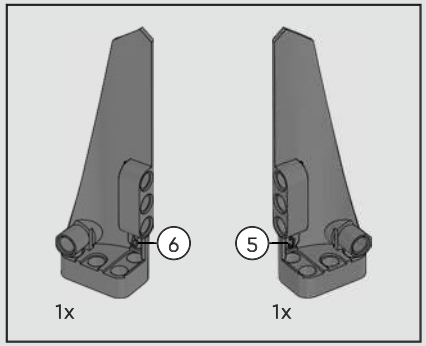

448

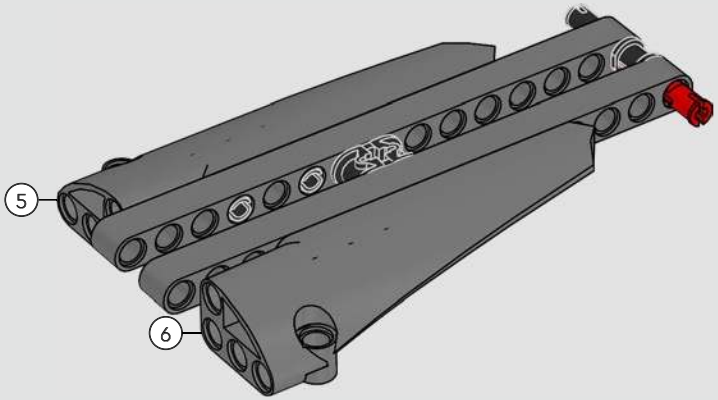

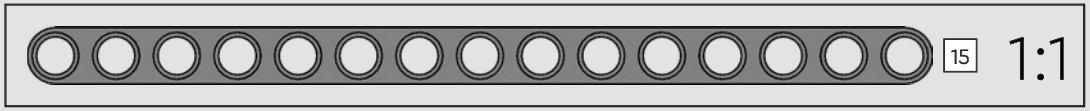

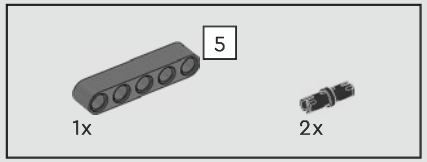

449

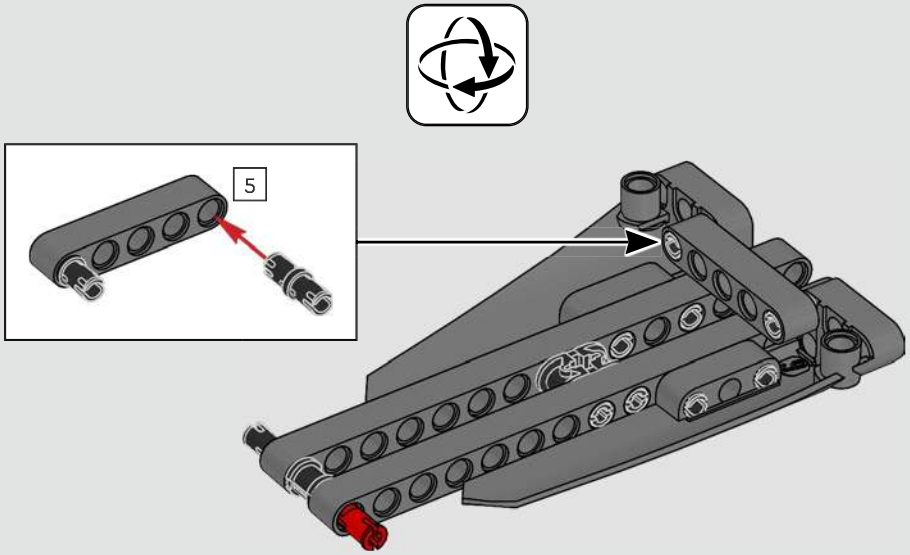

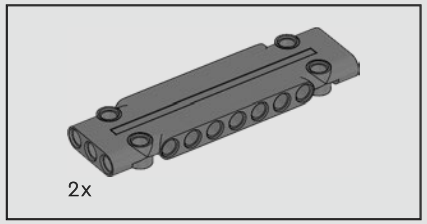

450

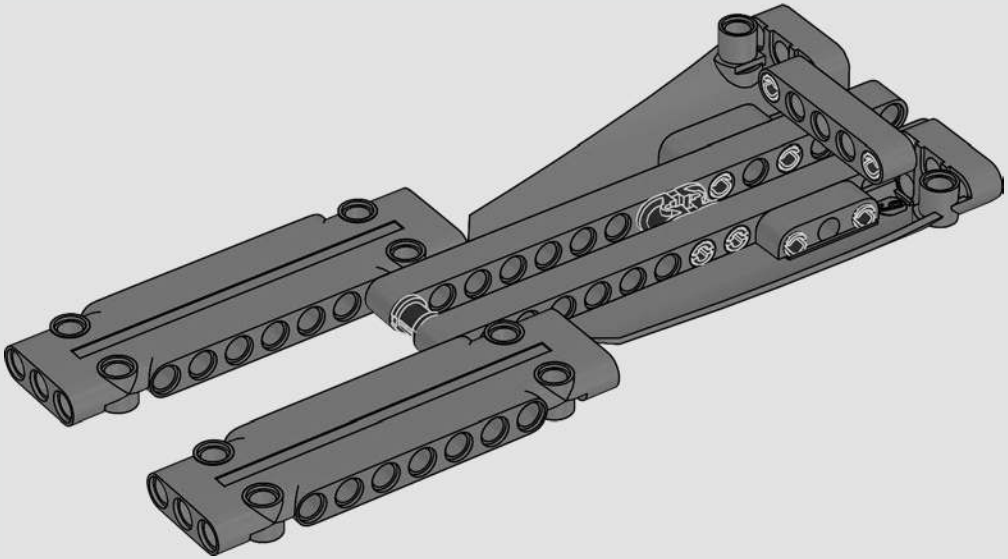

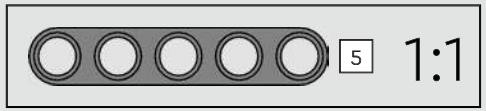

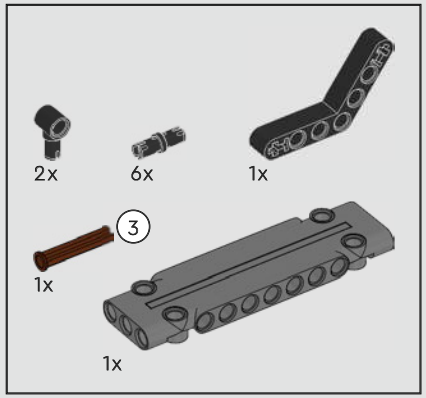

451

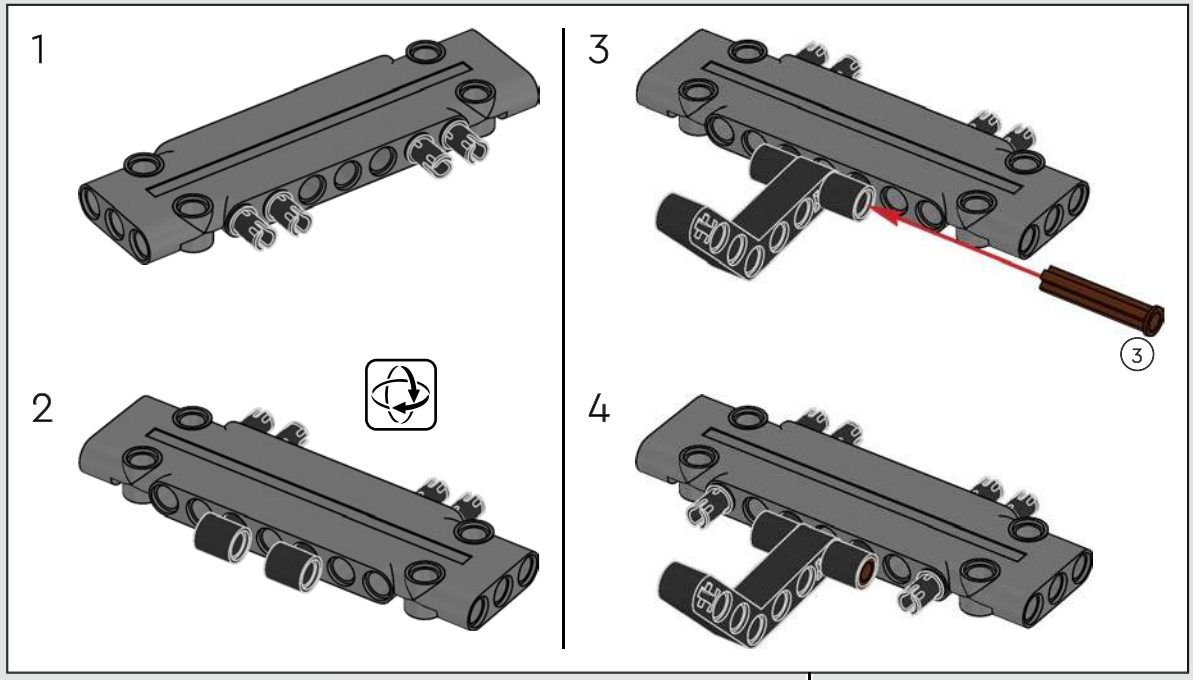

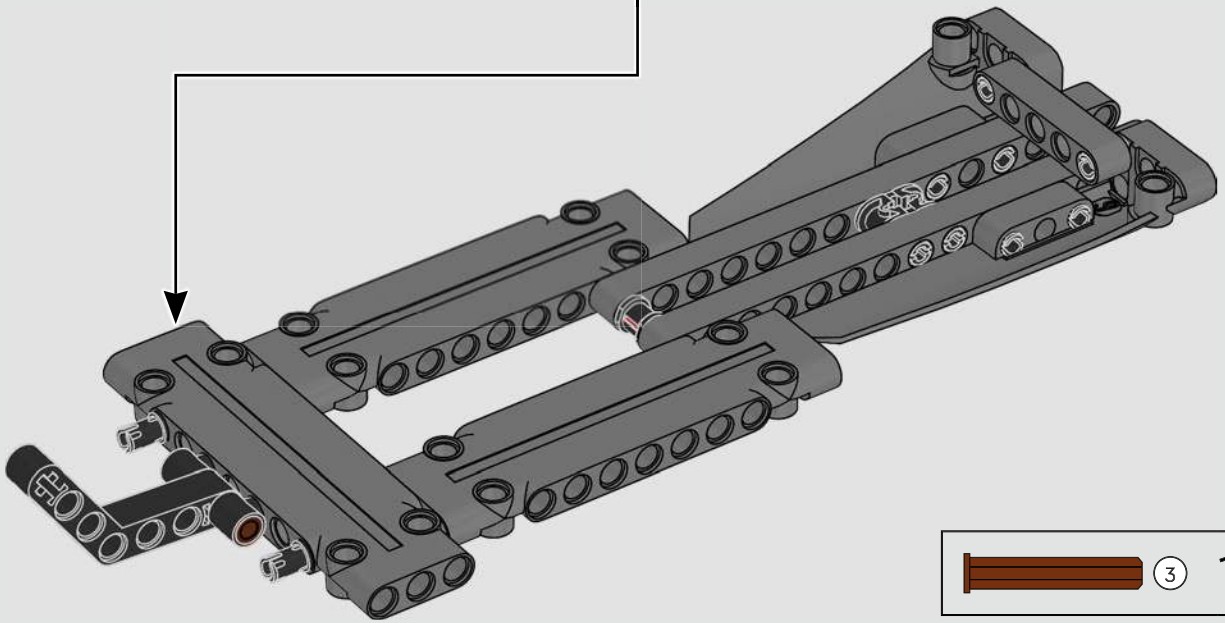

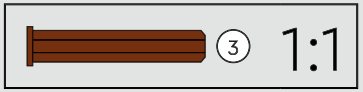

452

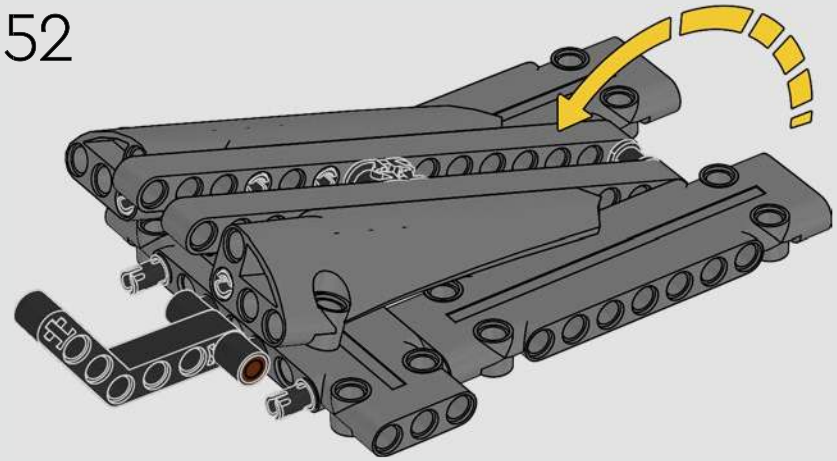

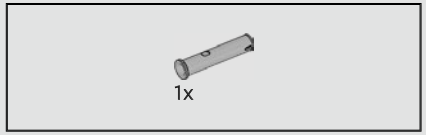

453

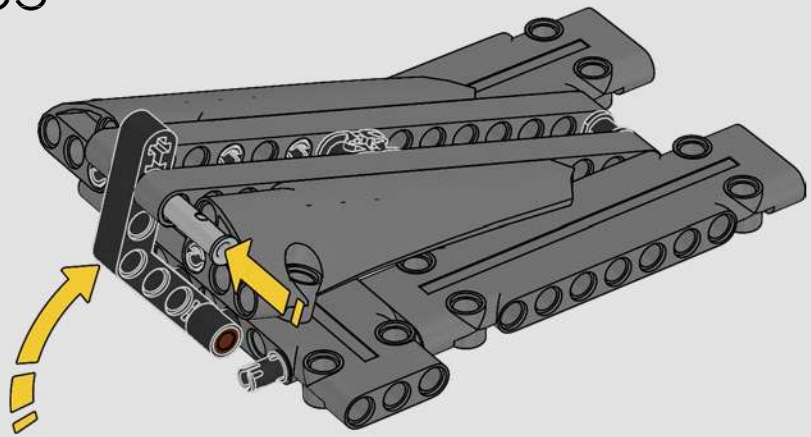

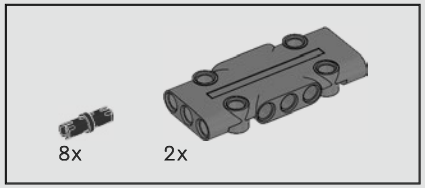

454

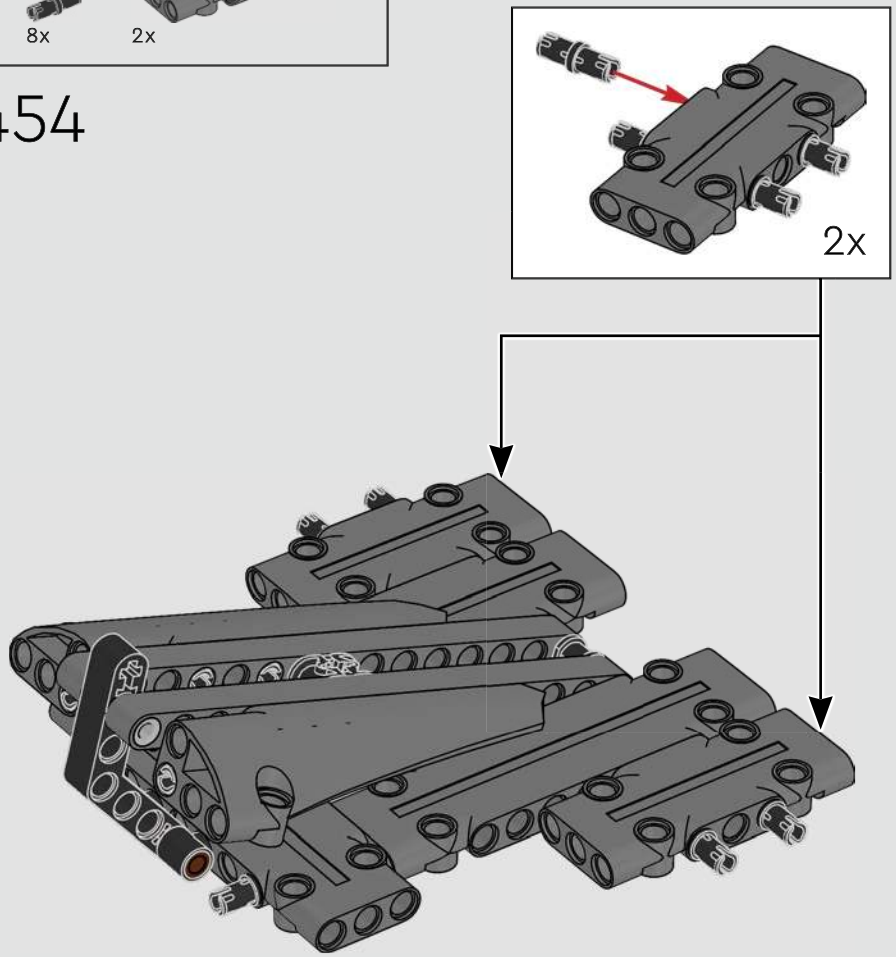

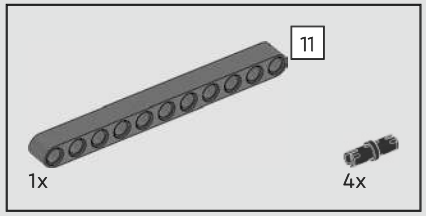

455

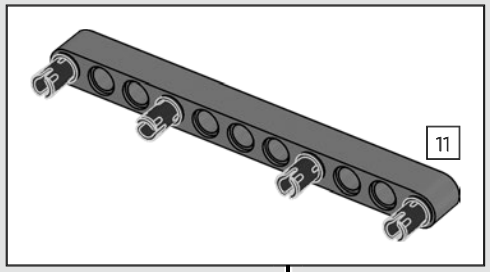

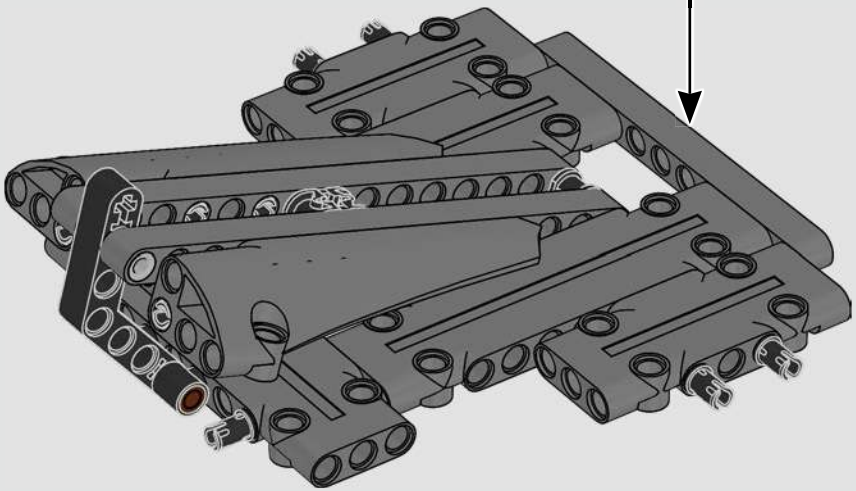

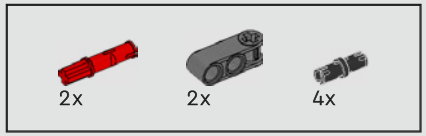

456

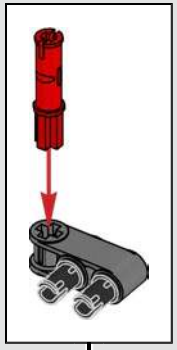

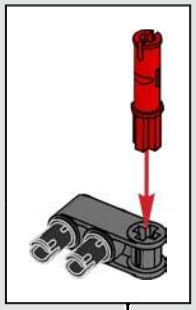

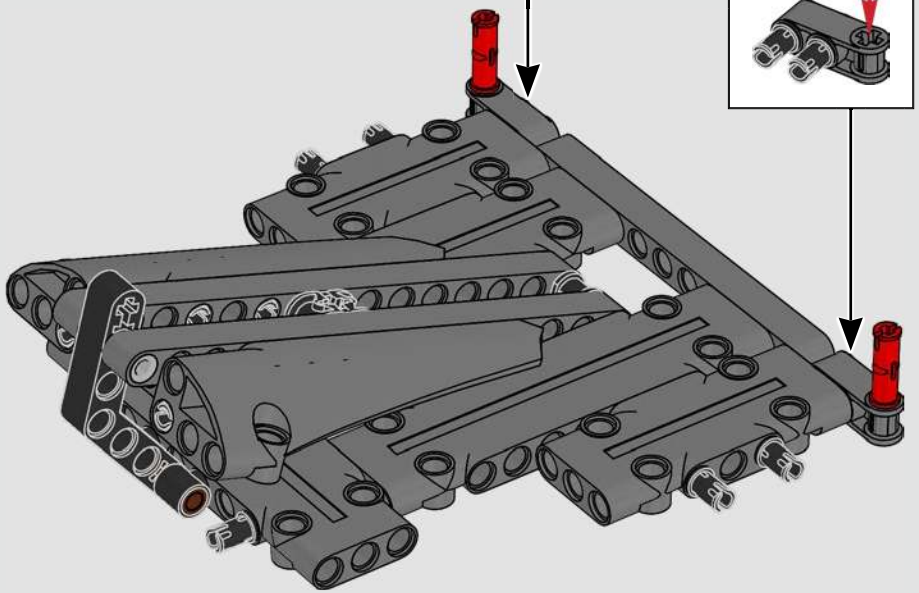

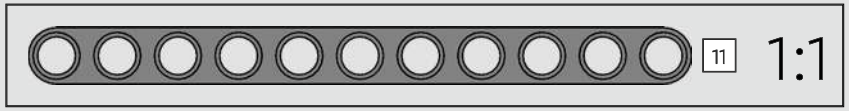

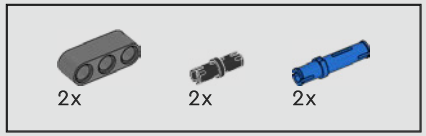

457

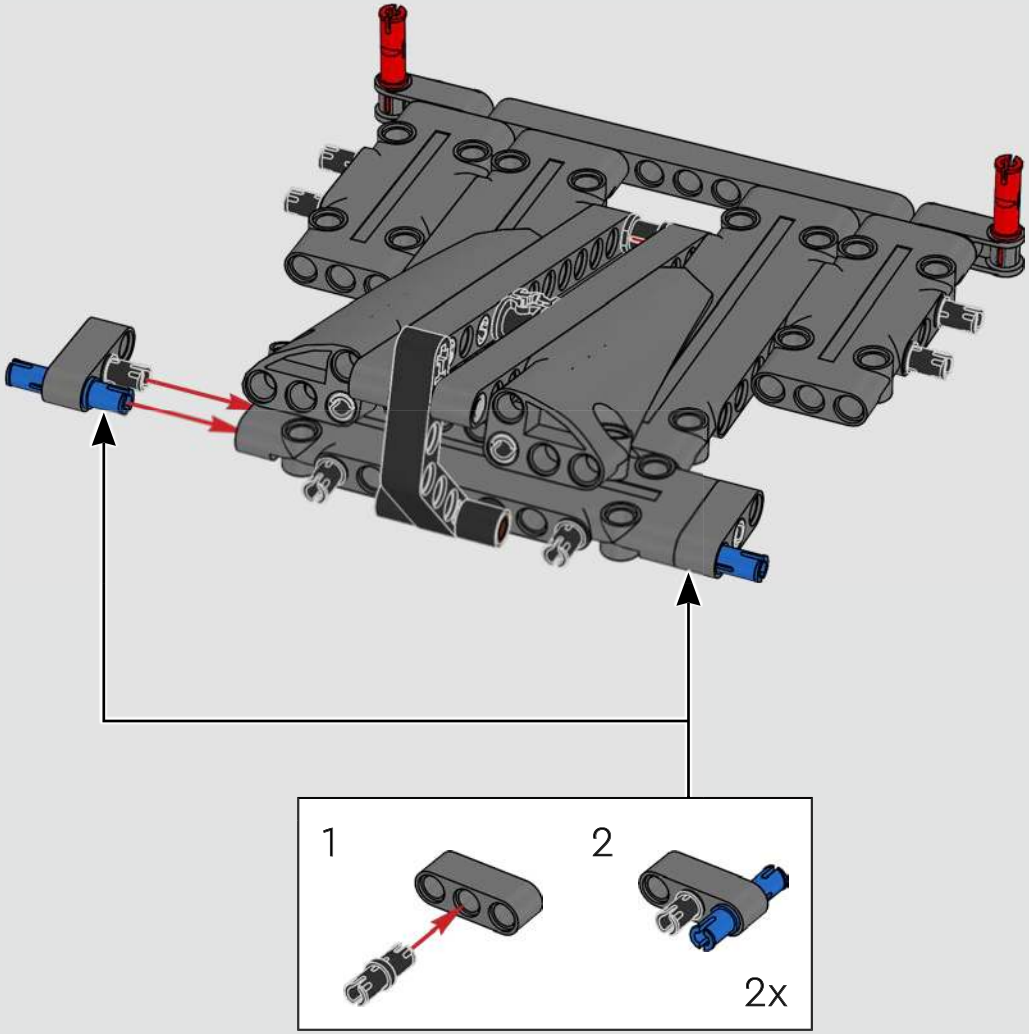

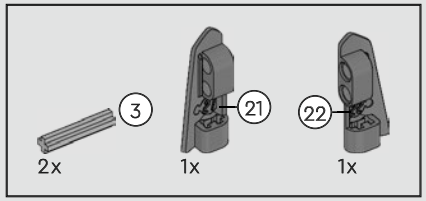

458

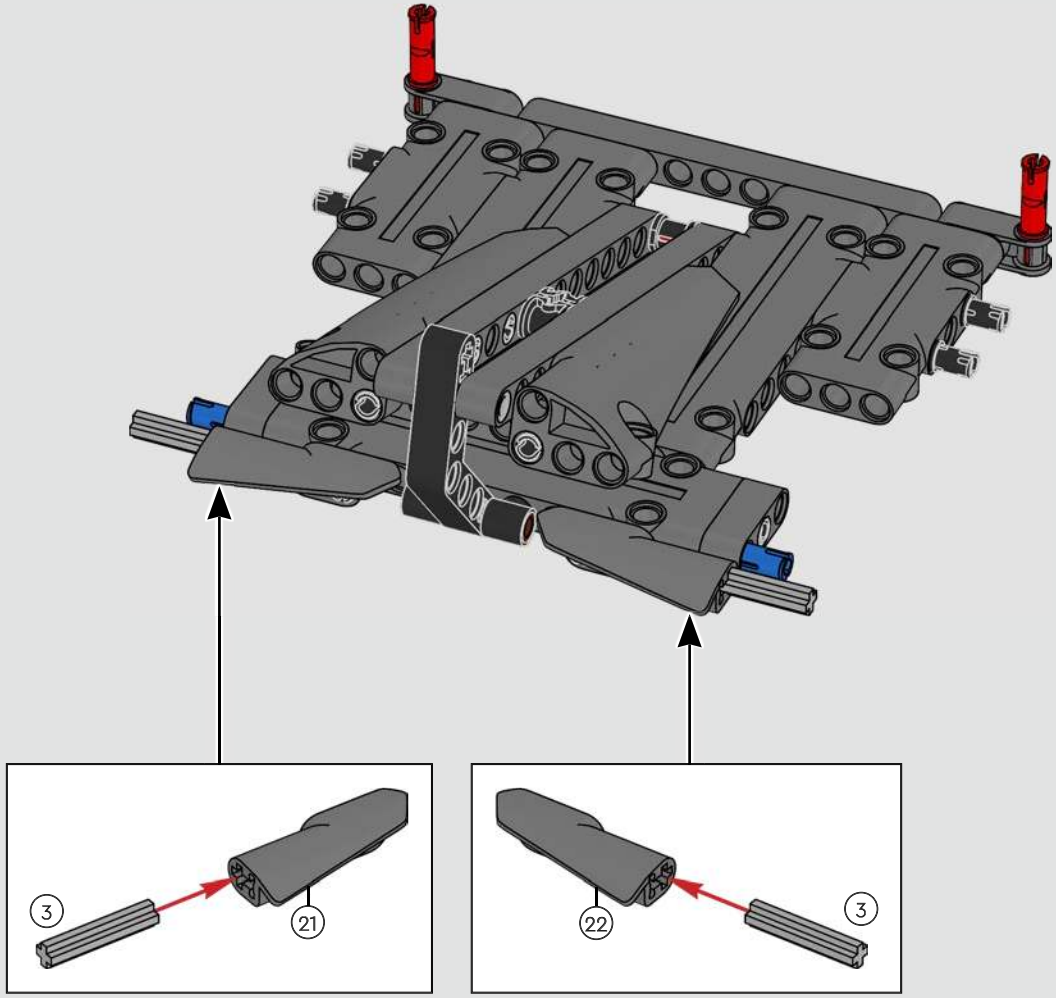

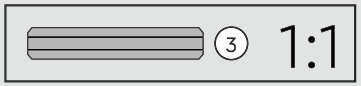

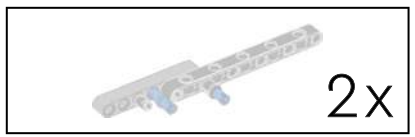

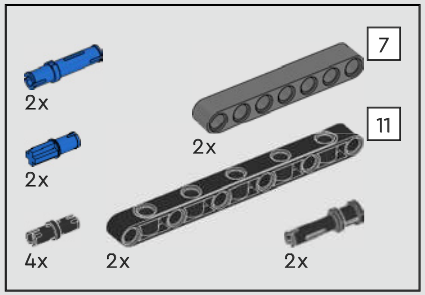

459

1

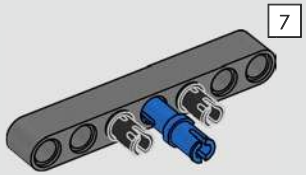

2

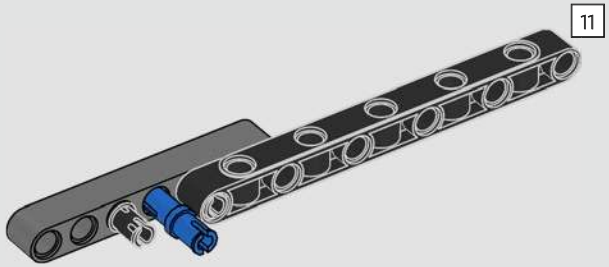

3

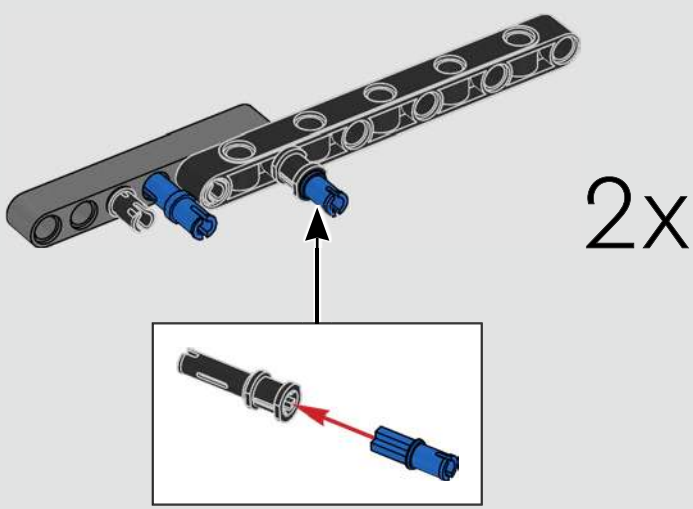

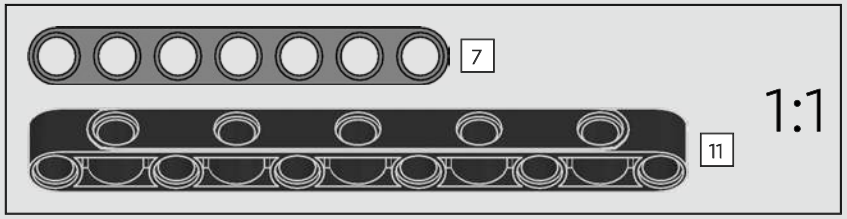

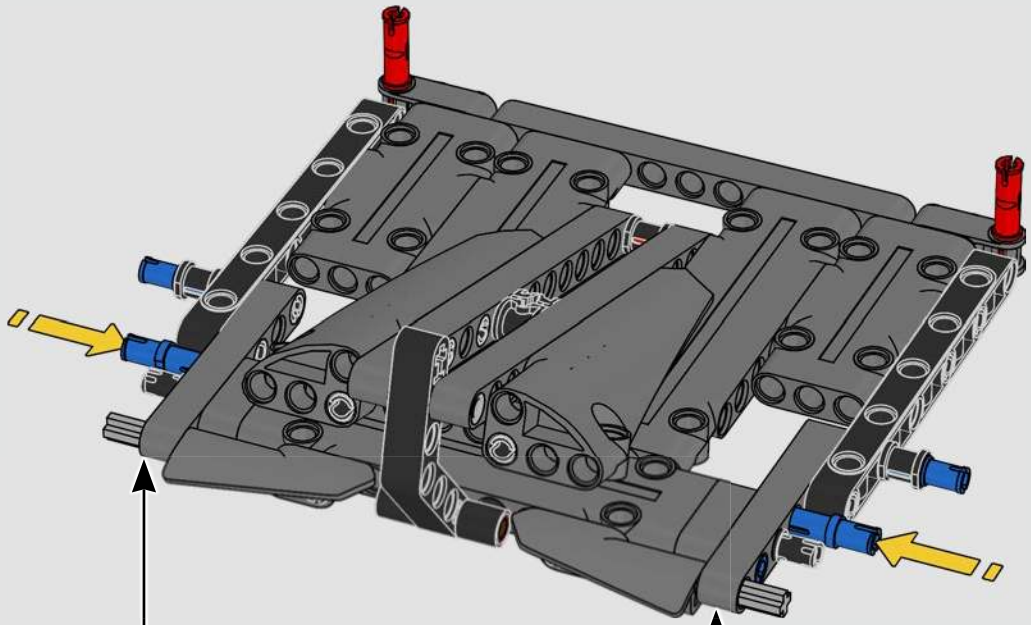

460

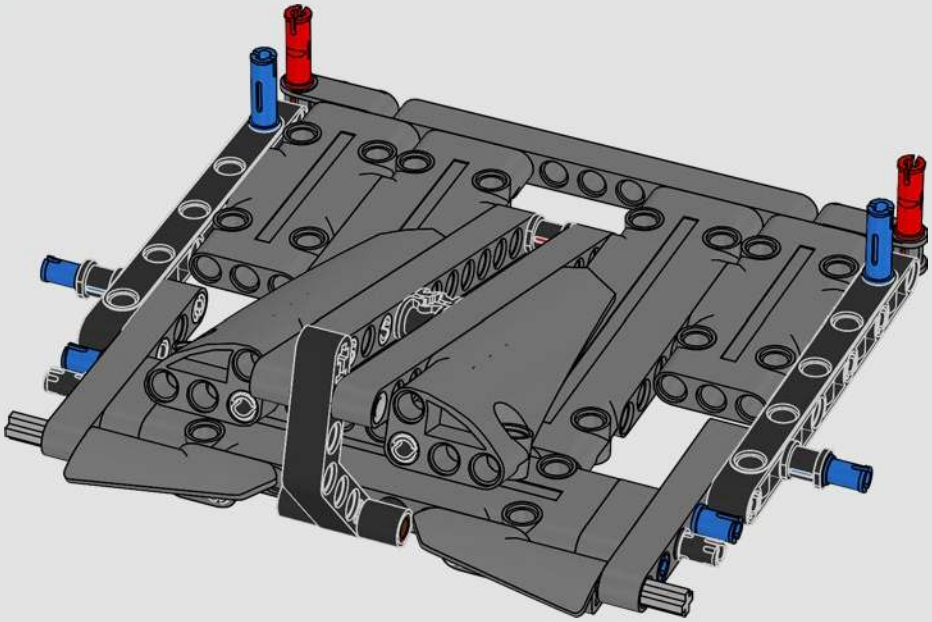

461

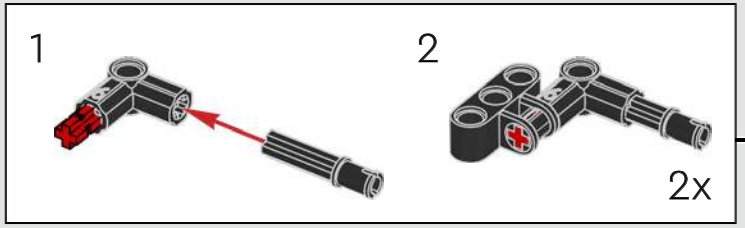

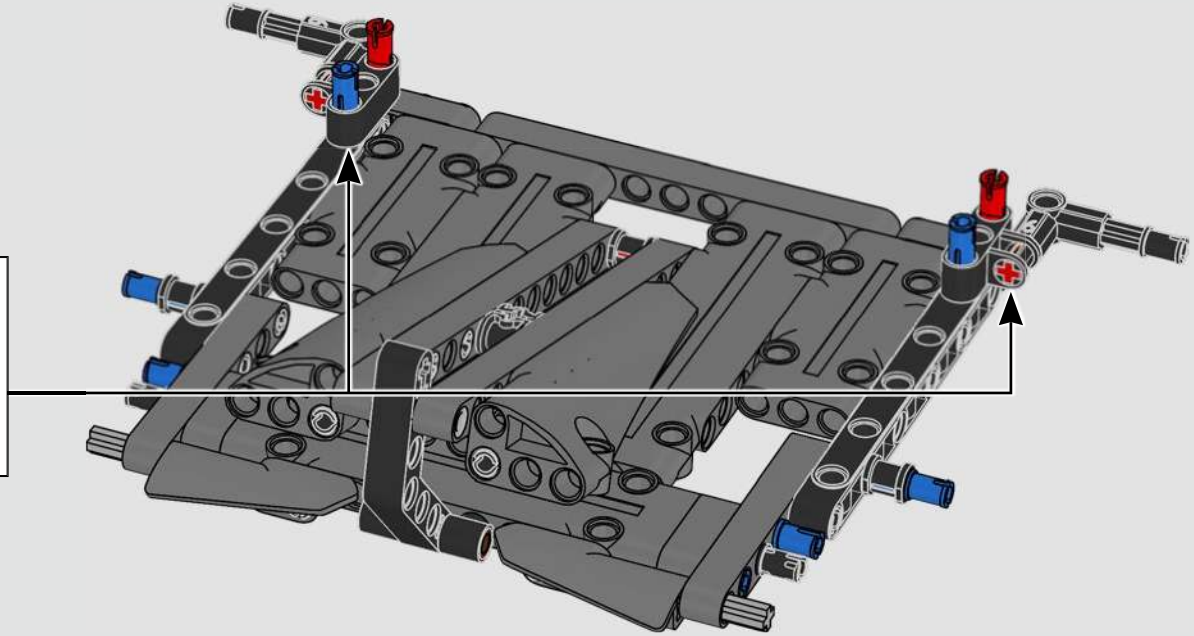

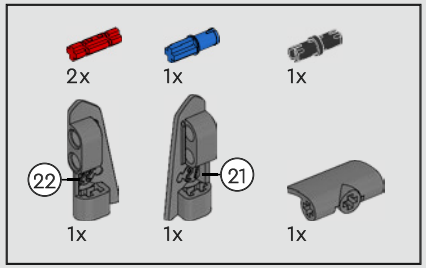

462

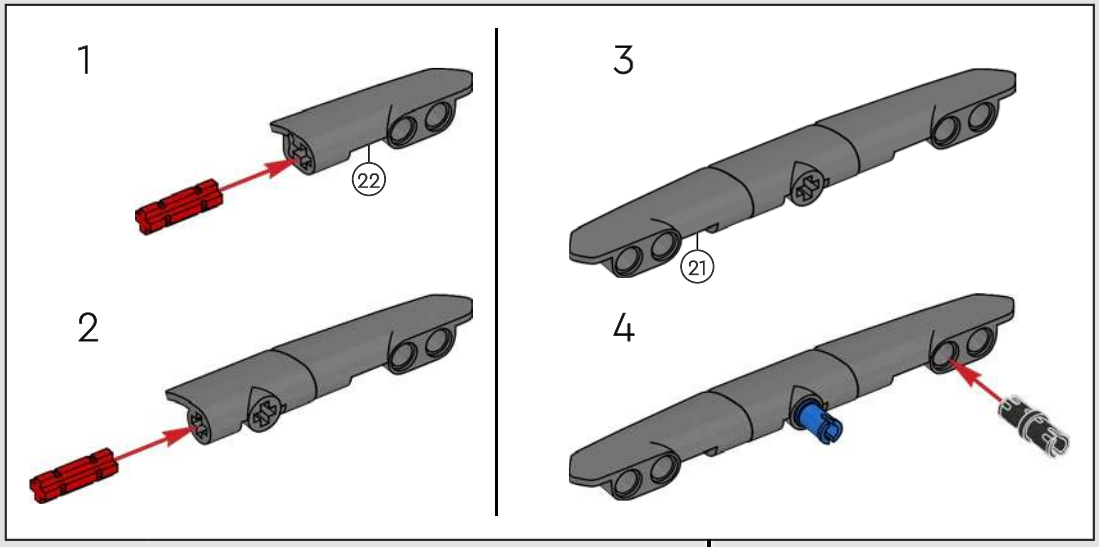

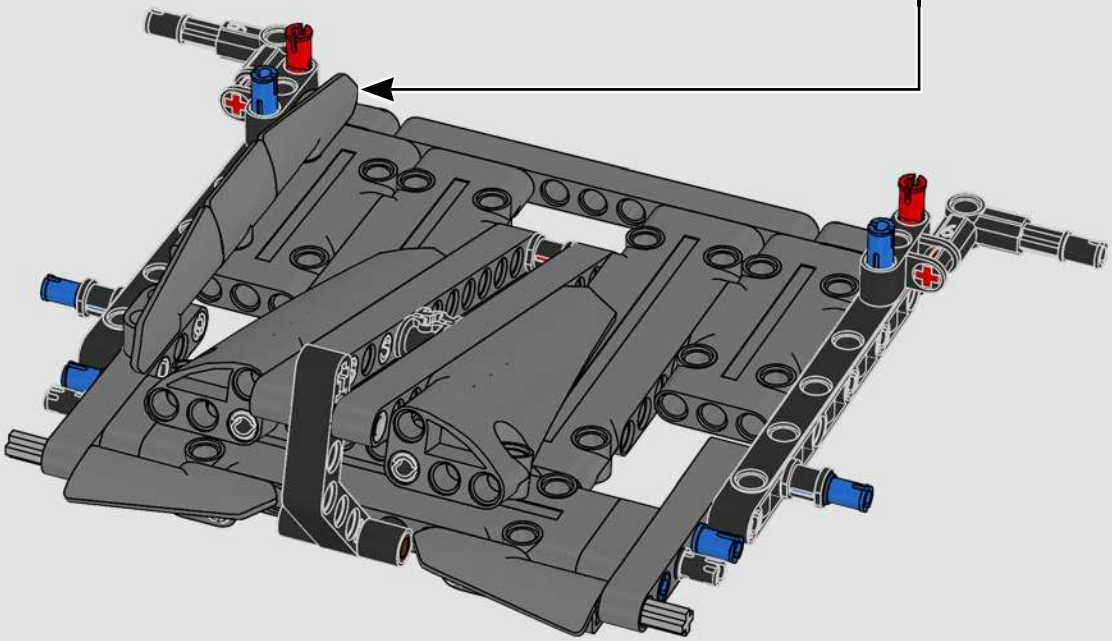

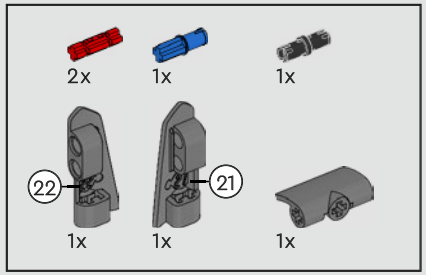

463

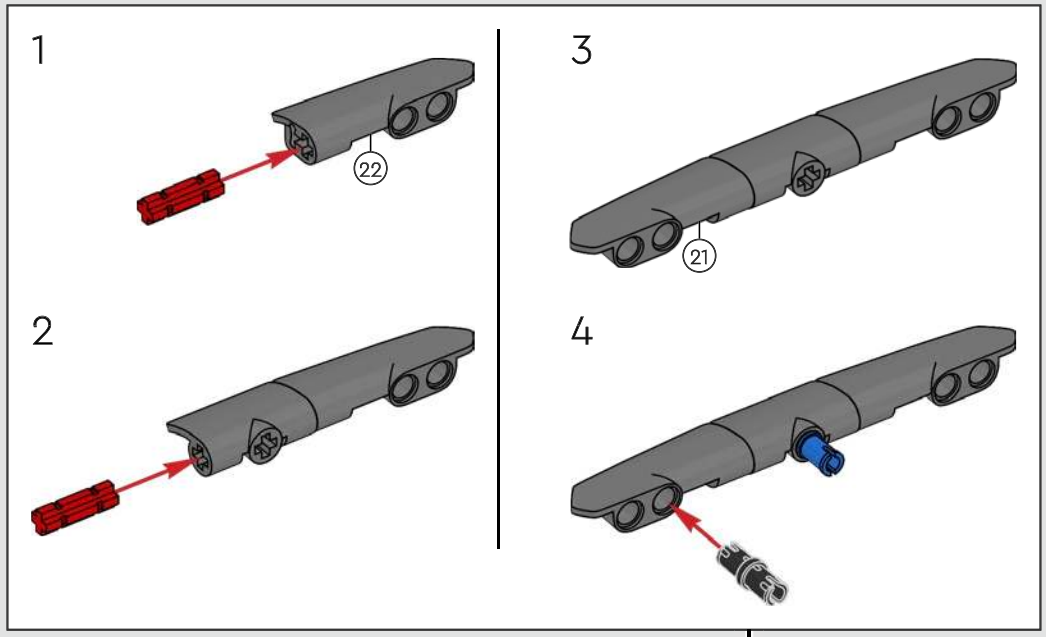

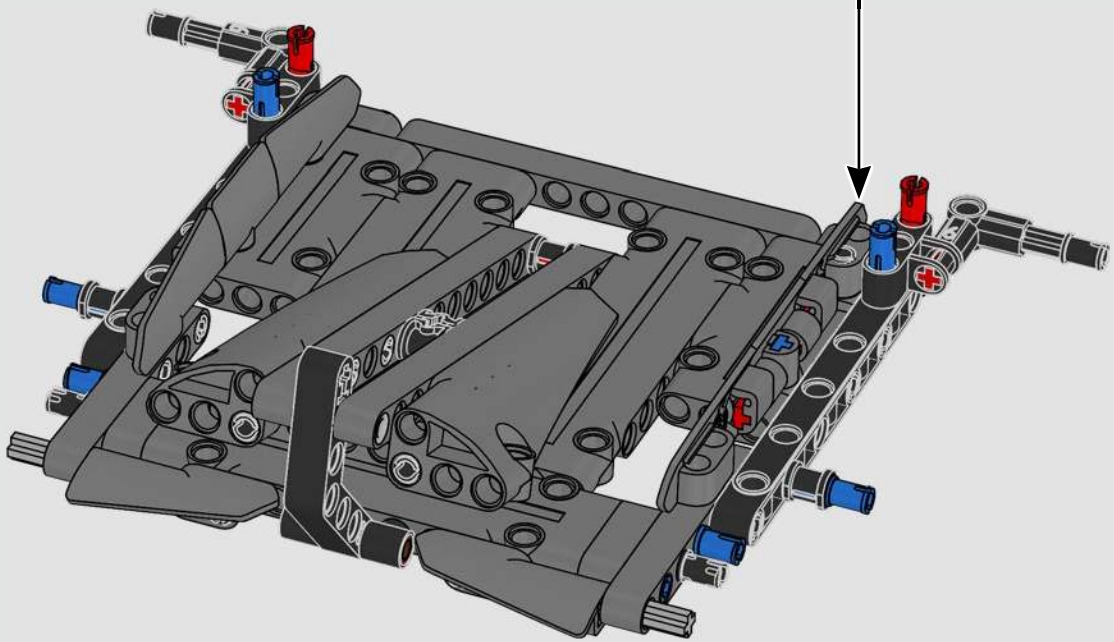

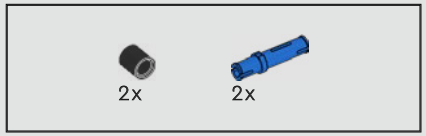

464

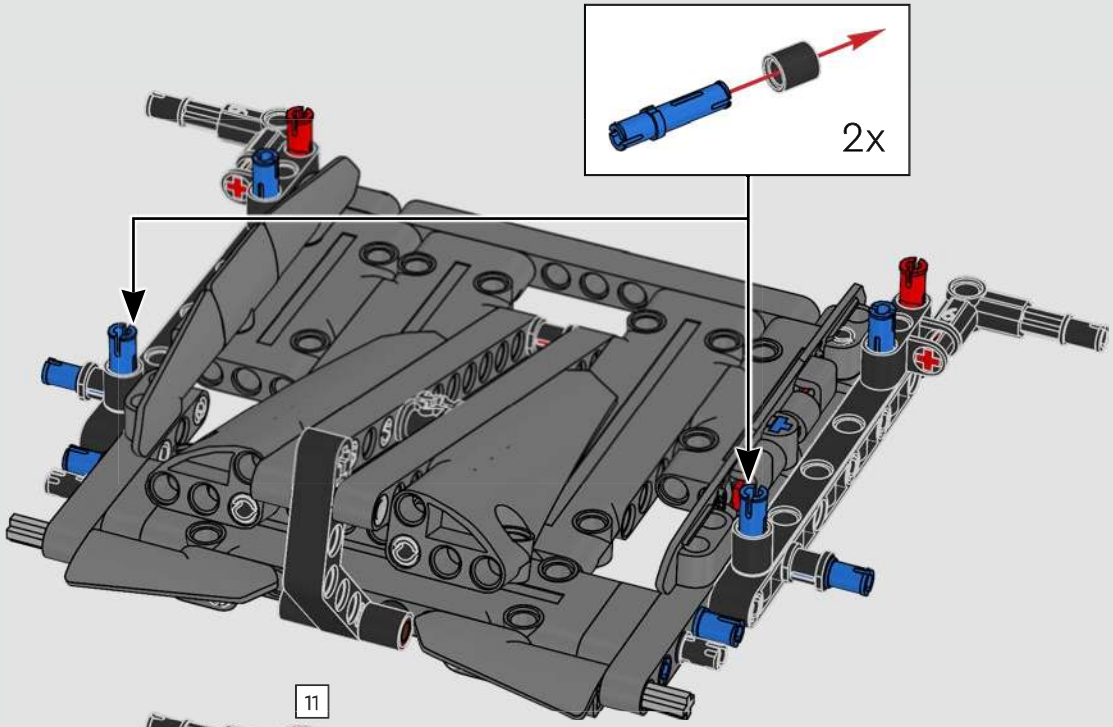

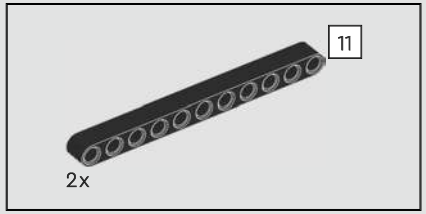

465

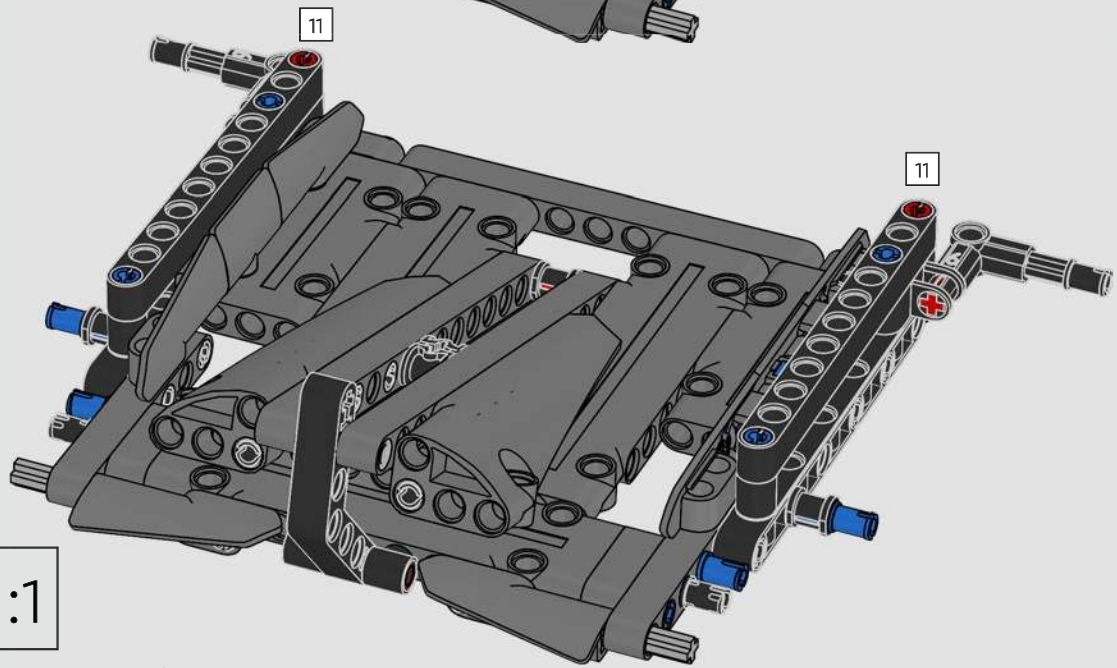

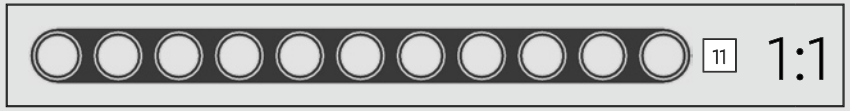

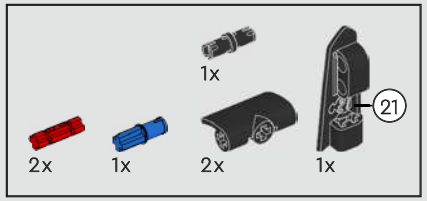

466

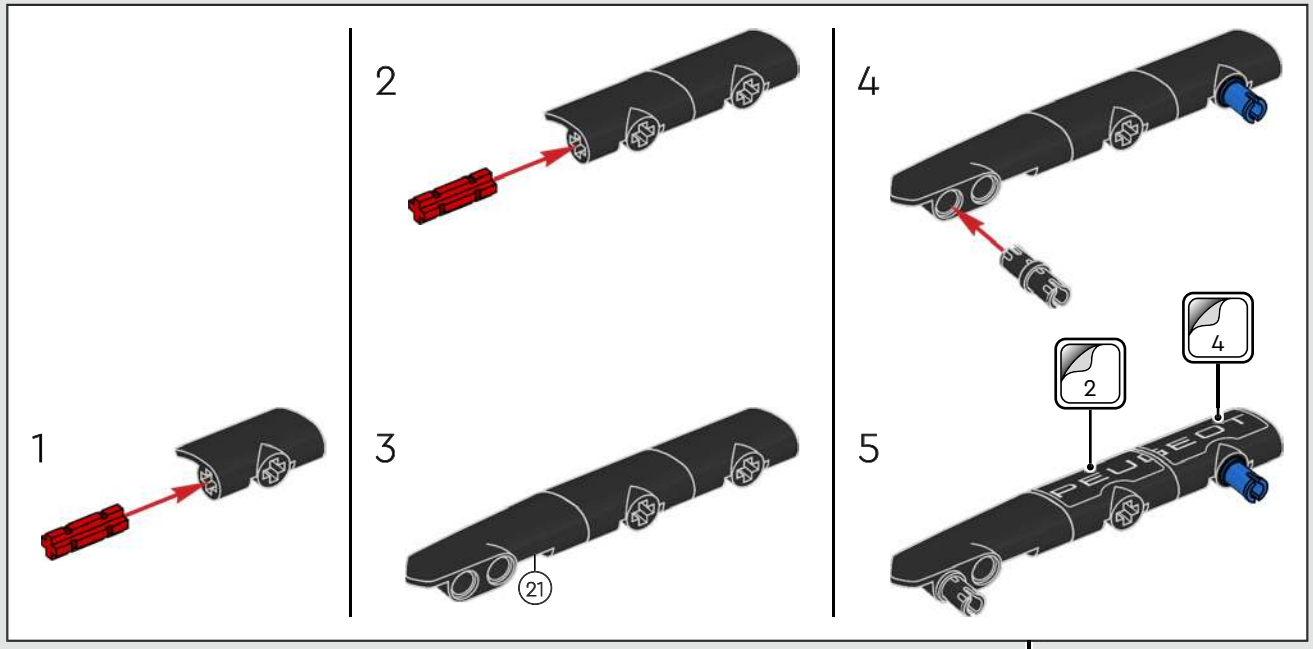

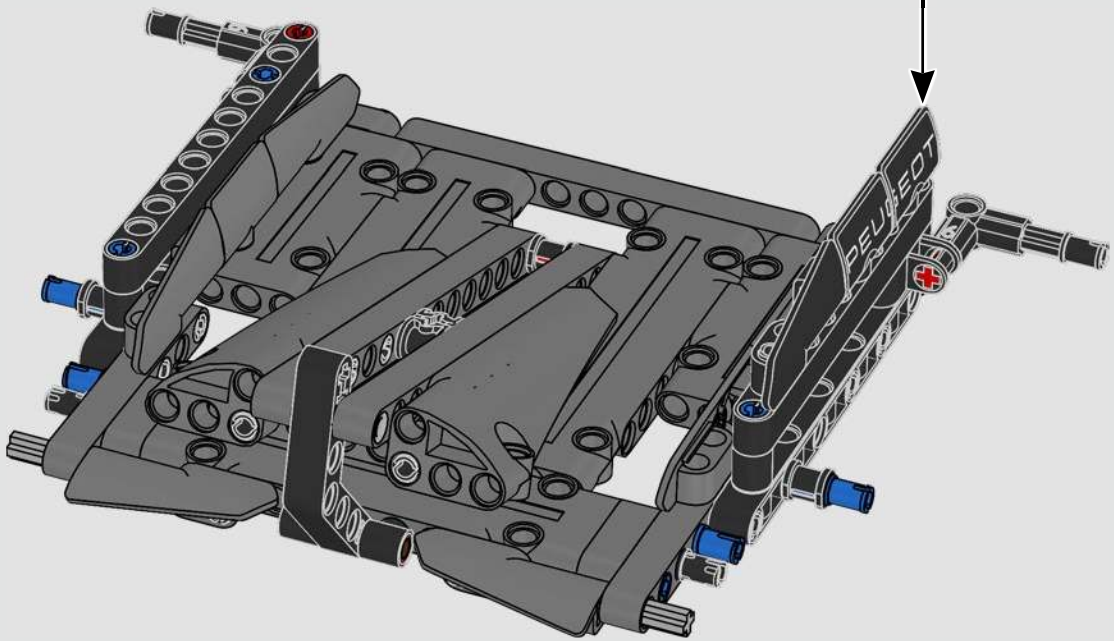

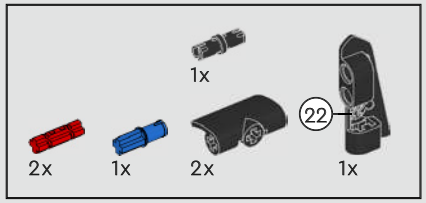

467

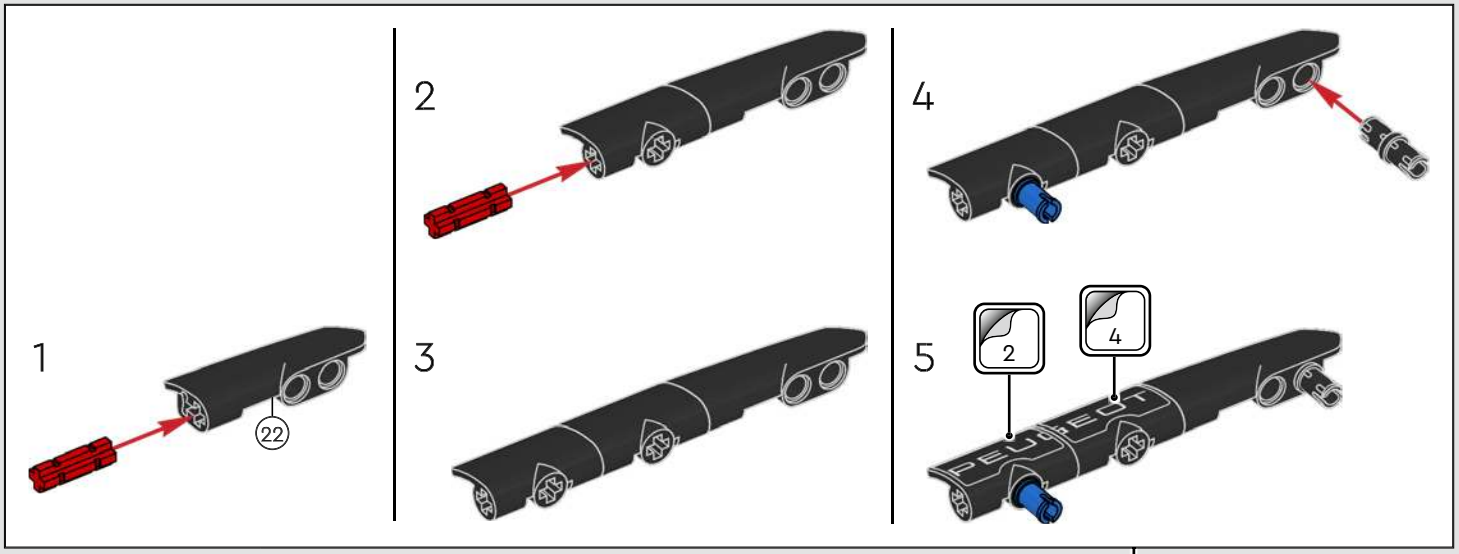

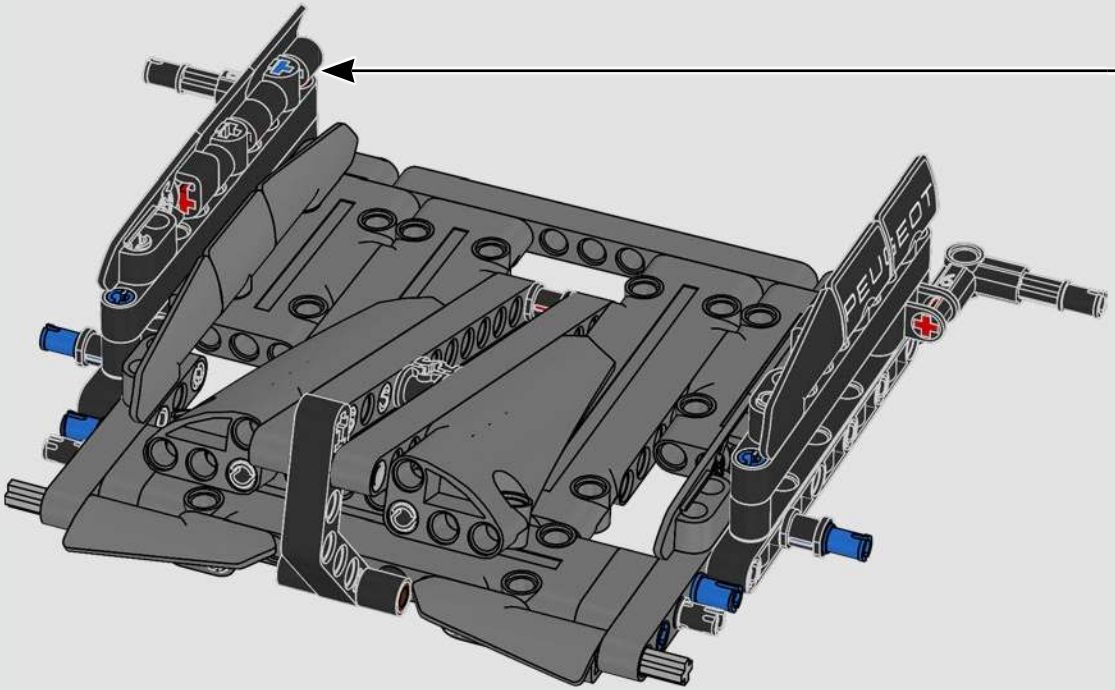

468

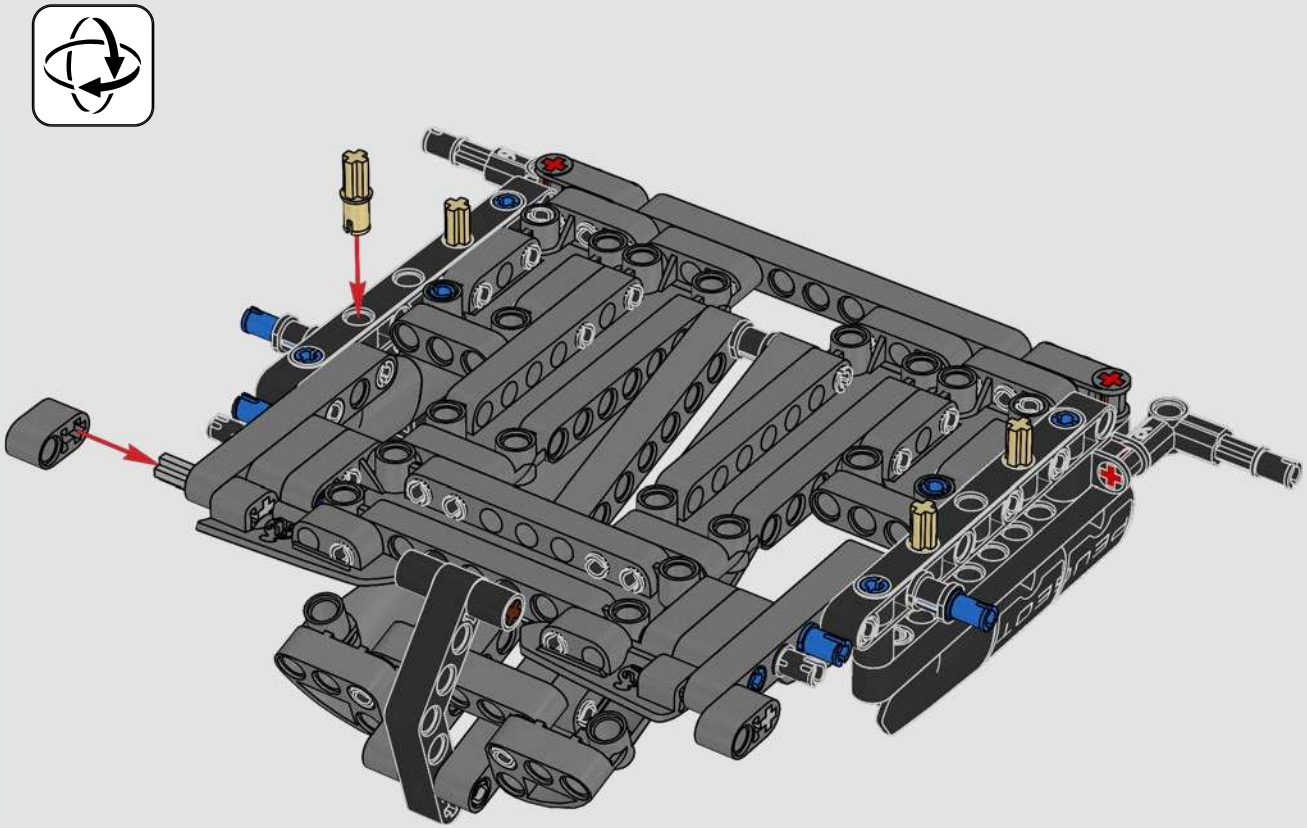

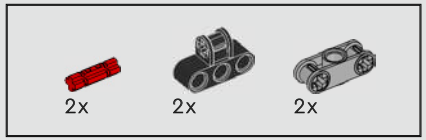

469

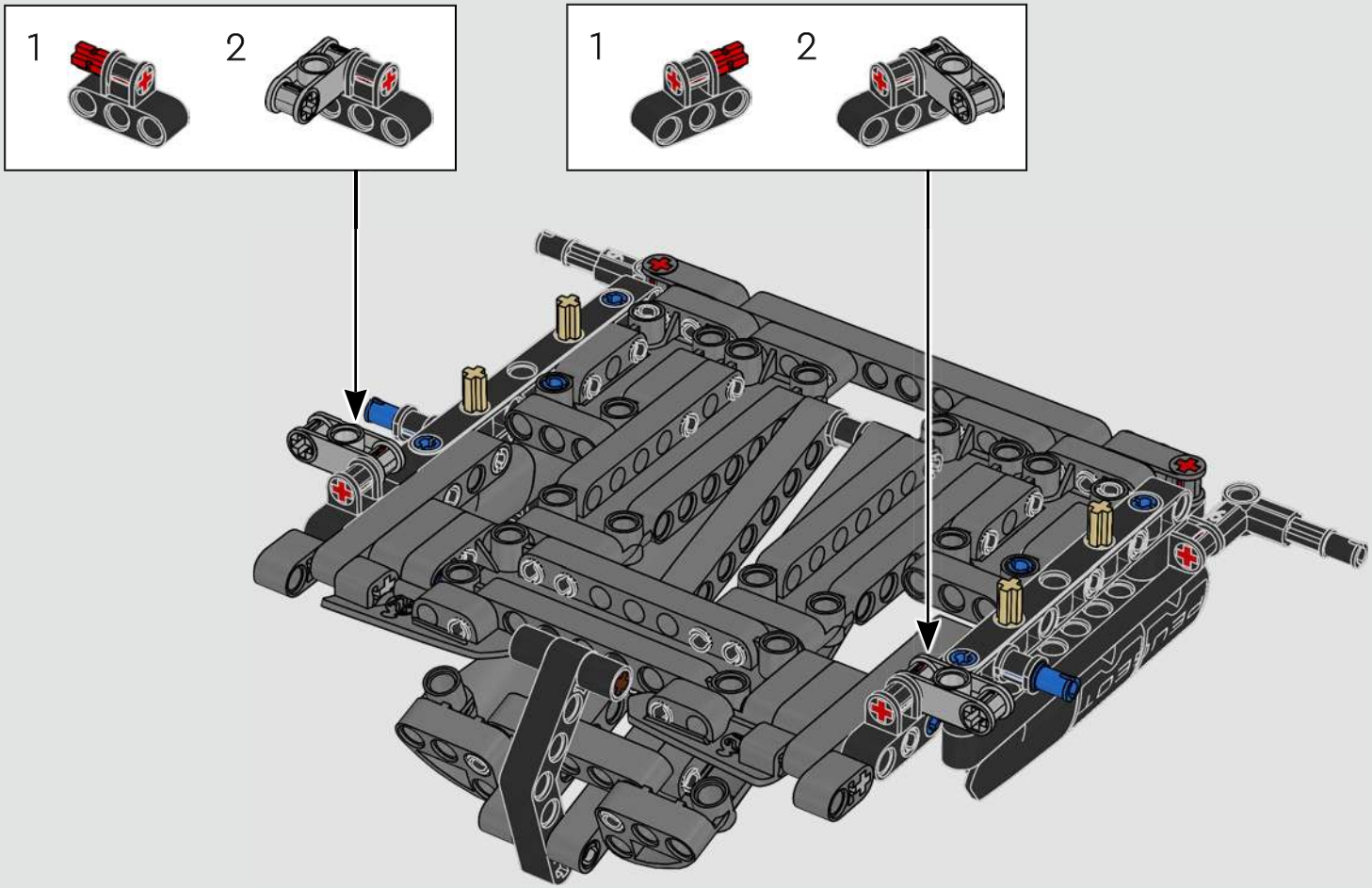

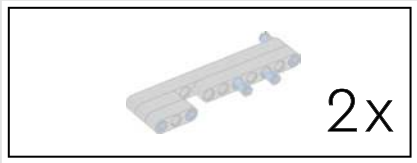

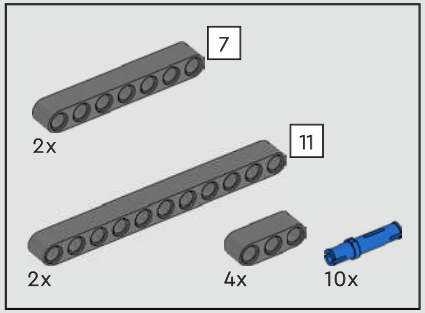

470

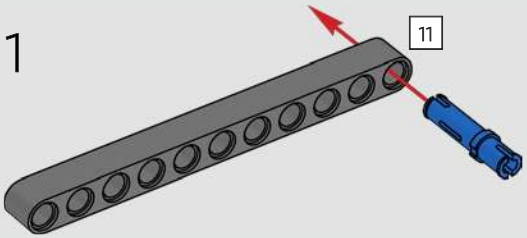

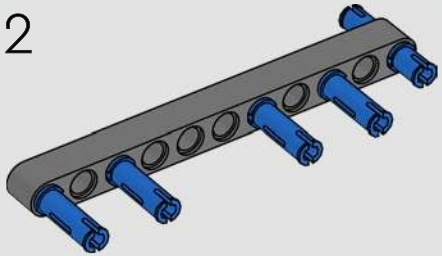

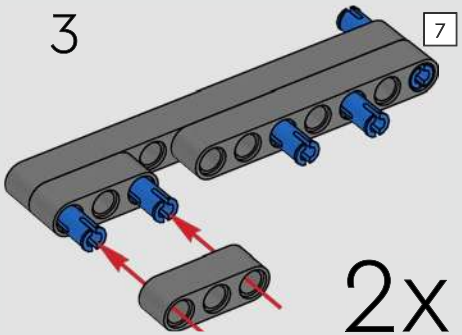

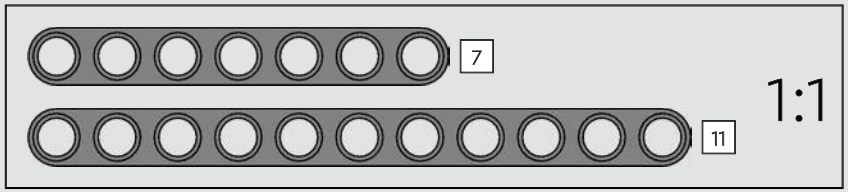

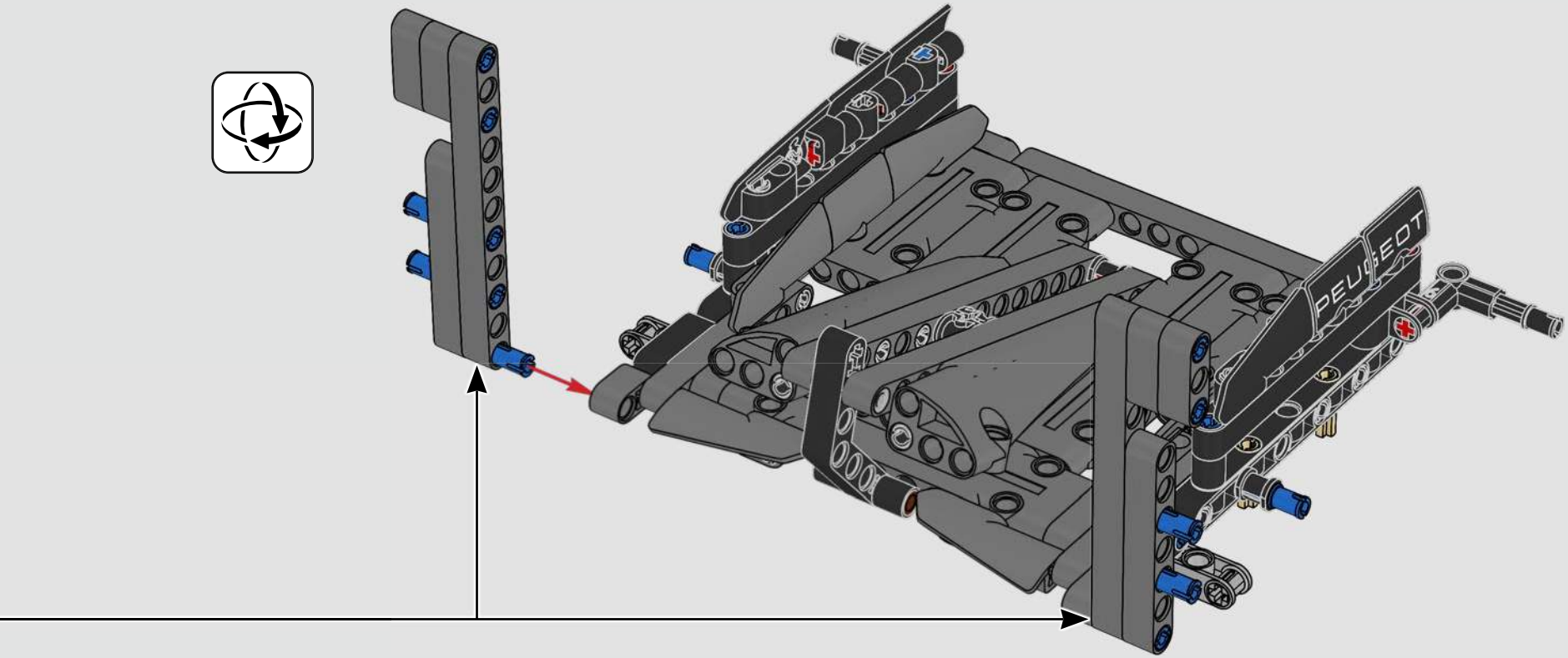
PEUGEOT

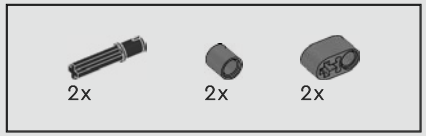

471

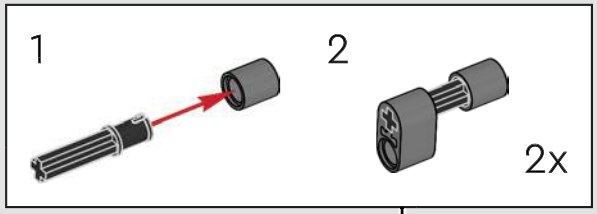

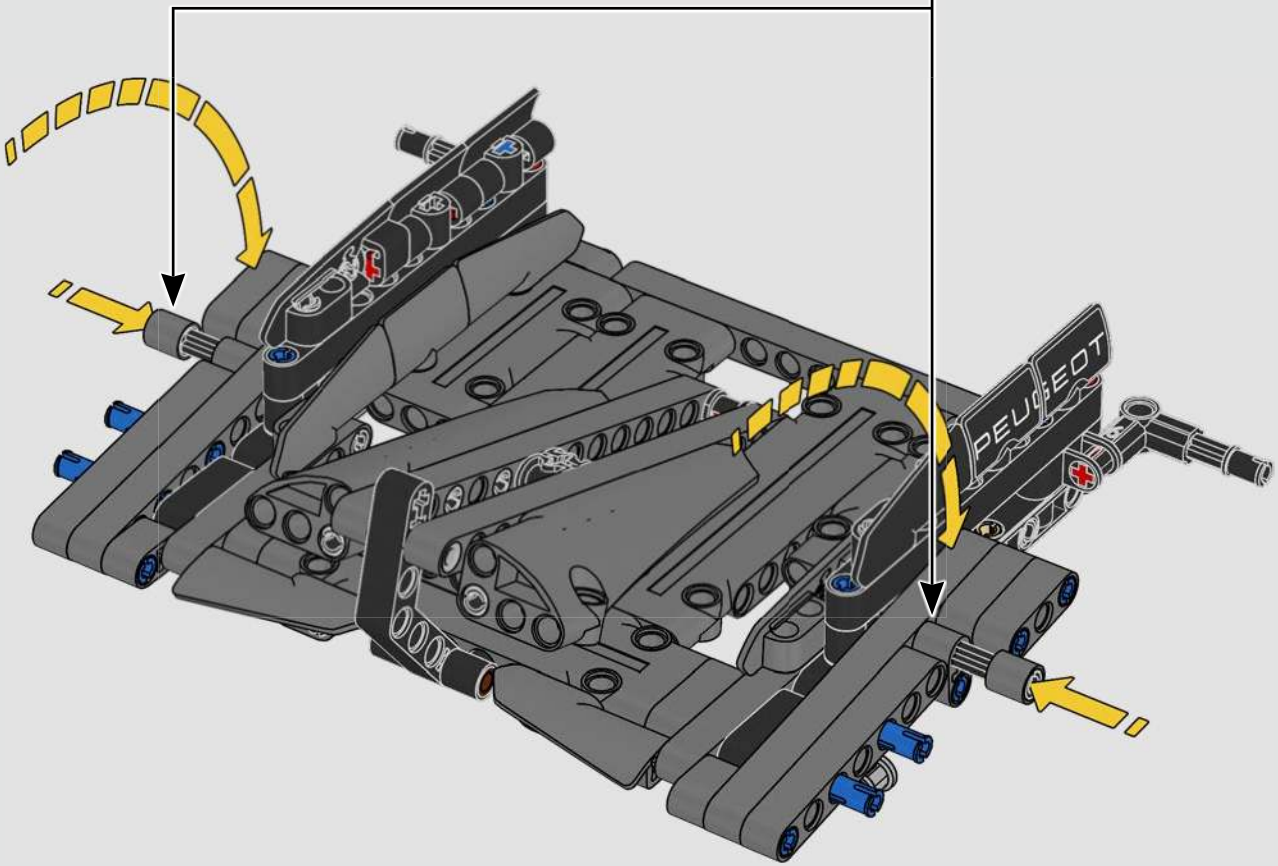

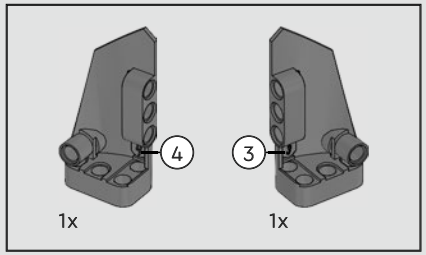

472

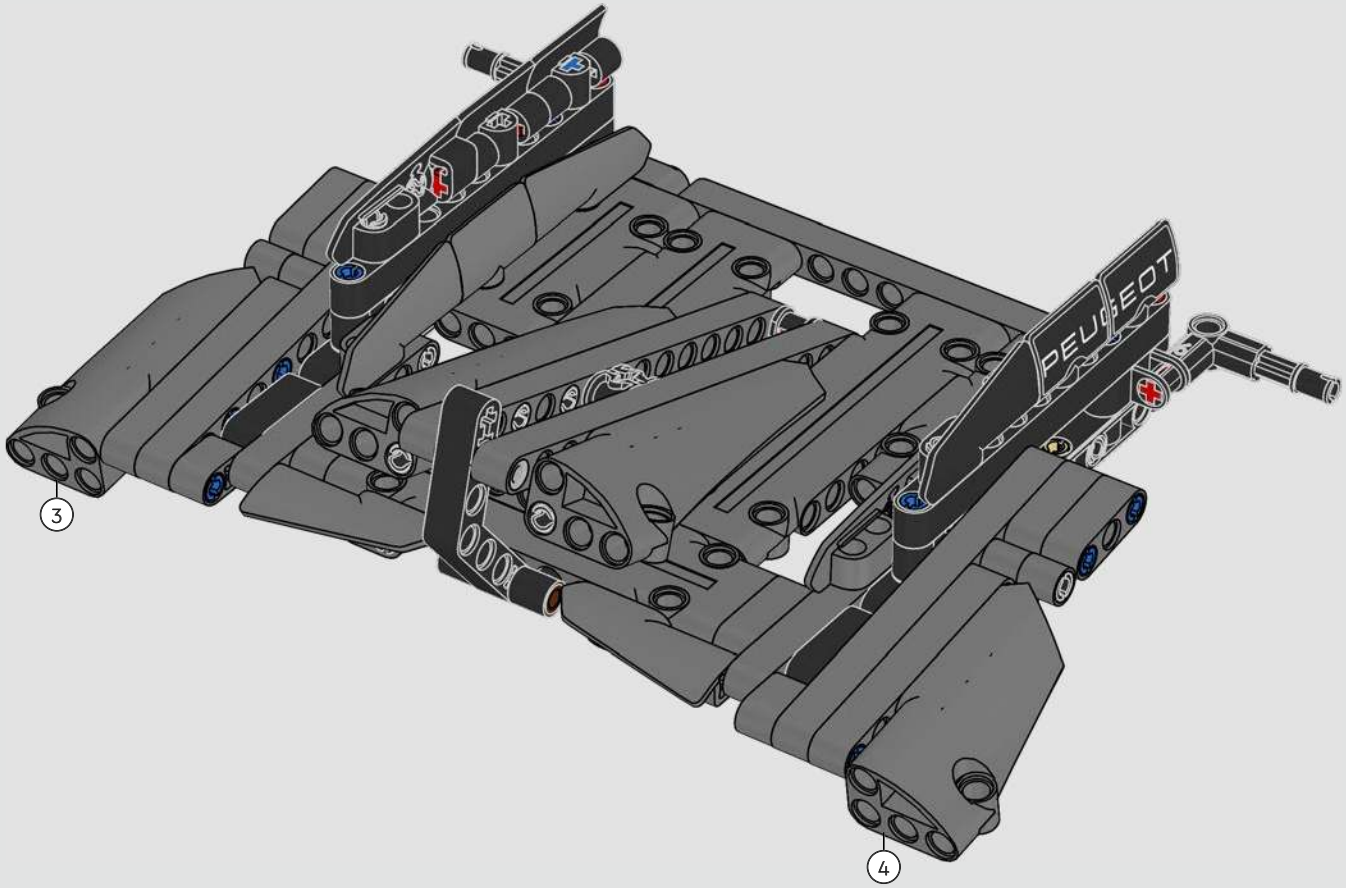

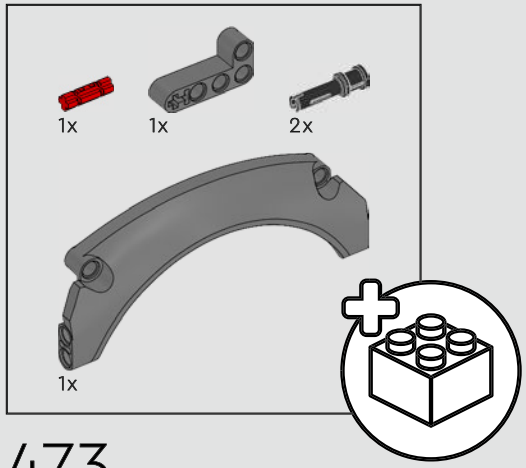

473

1

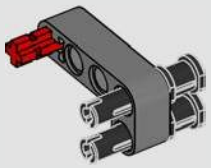

2

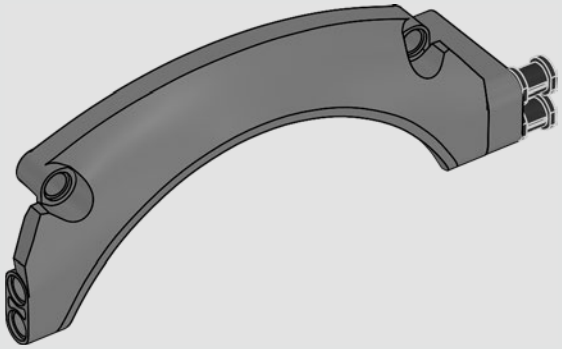

3

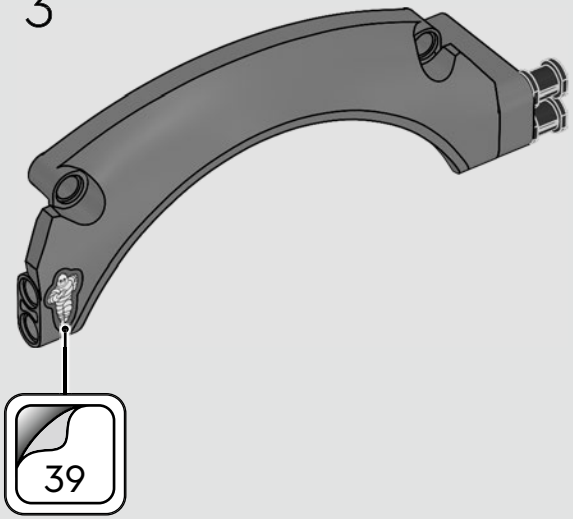

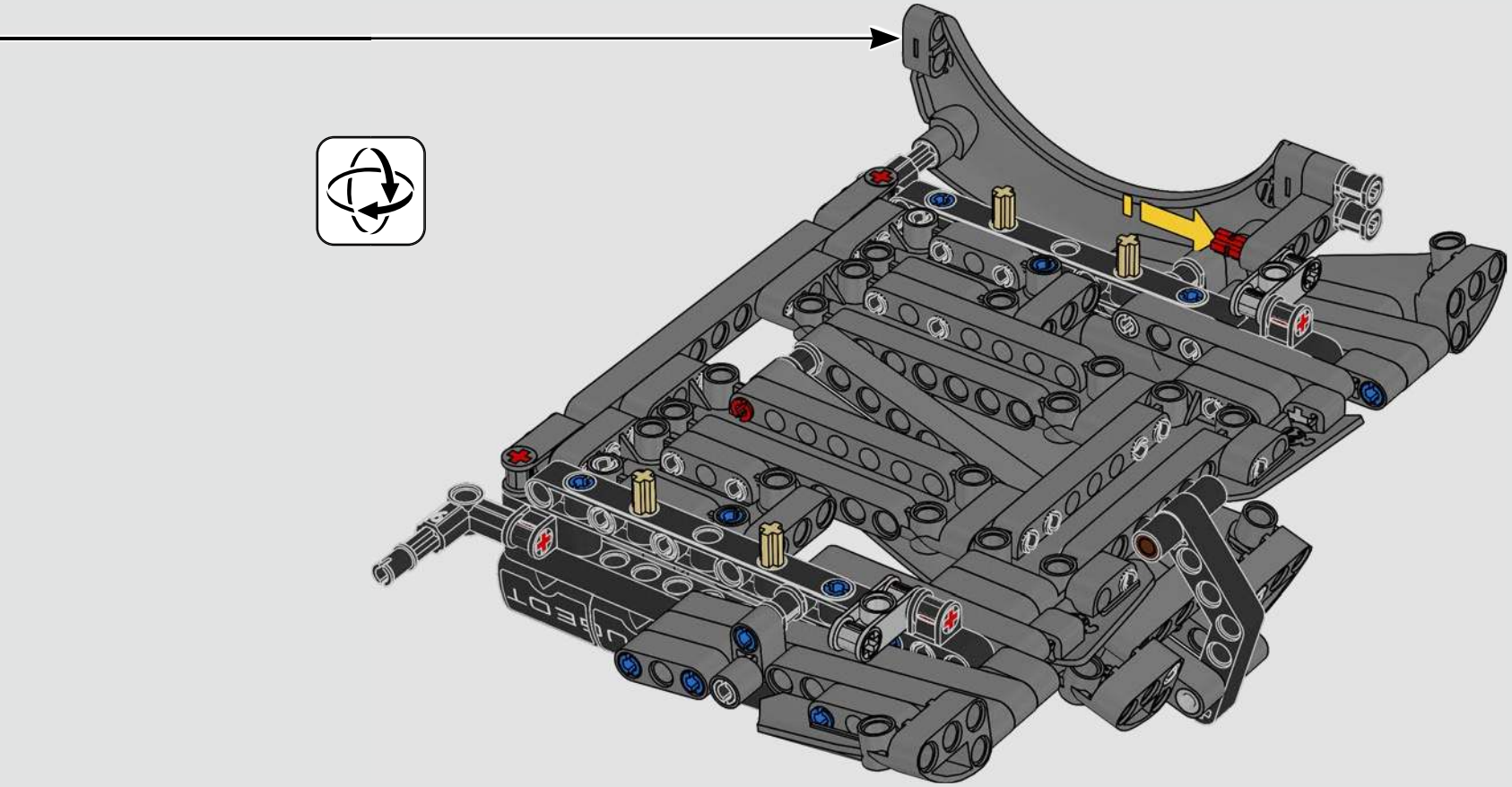

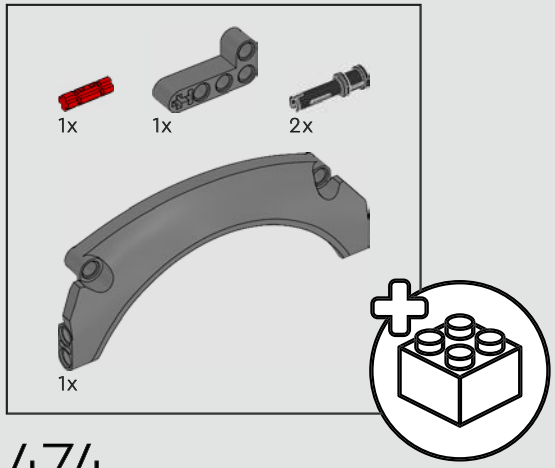

474

1

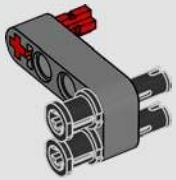

2

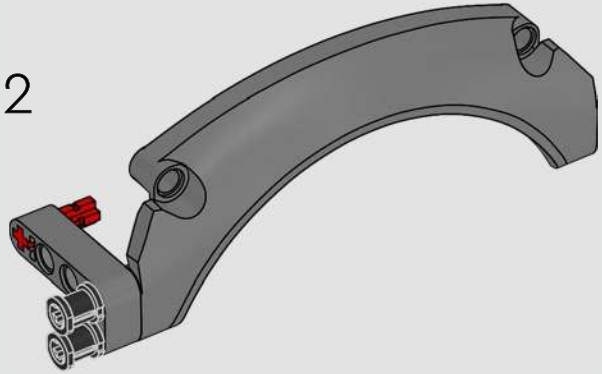

3

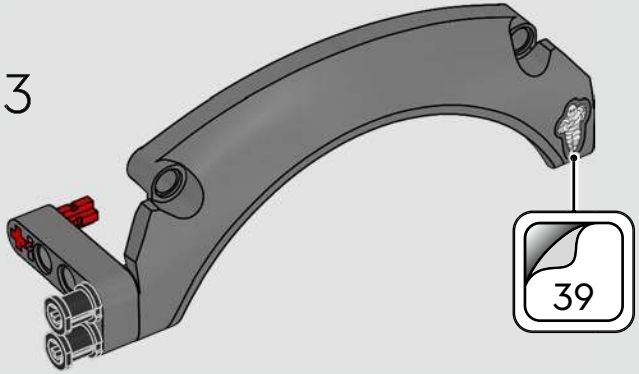

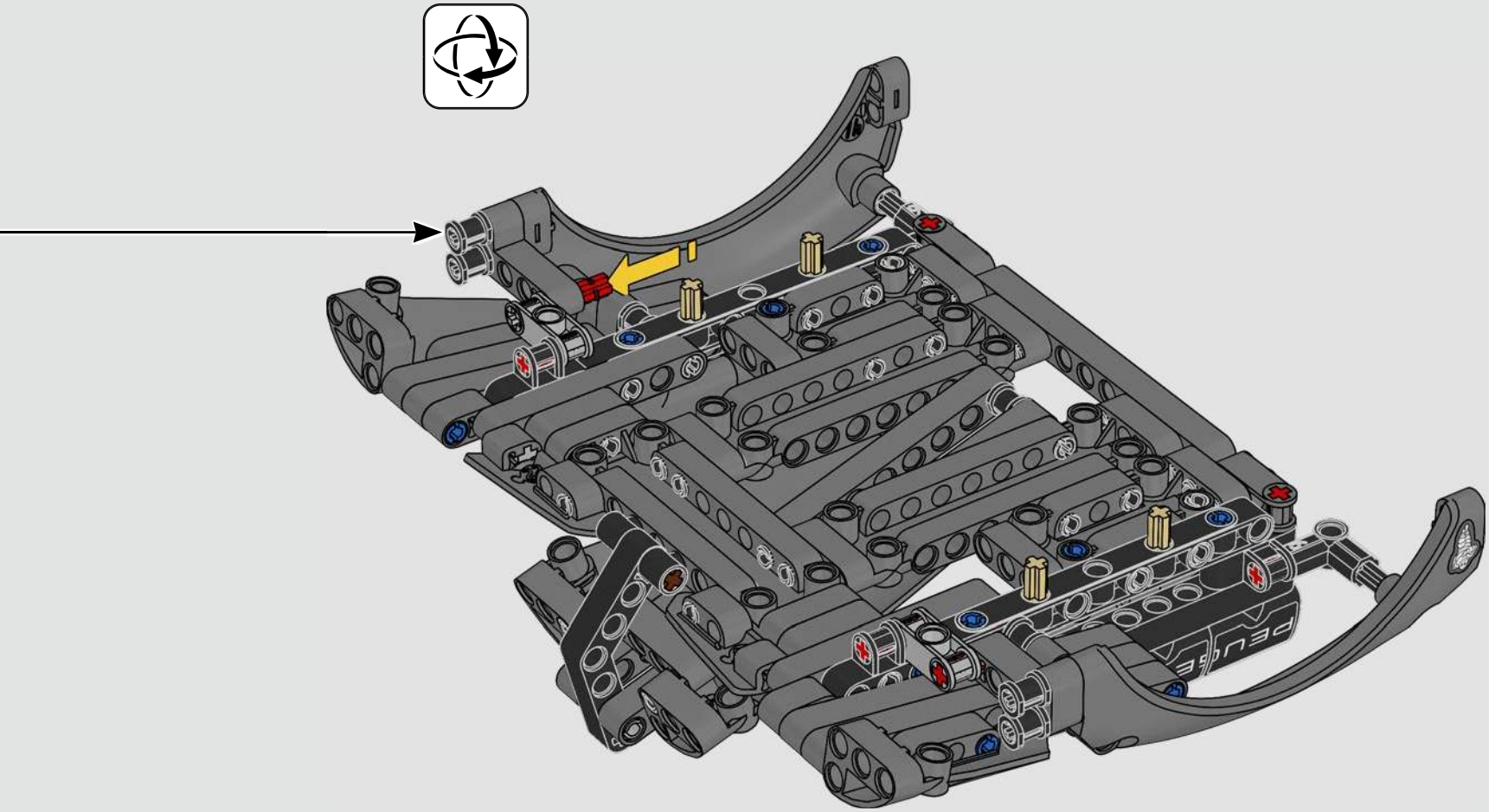

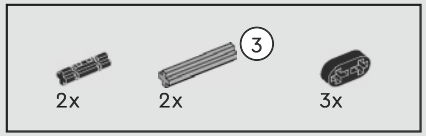

475

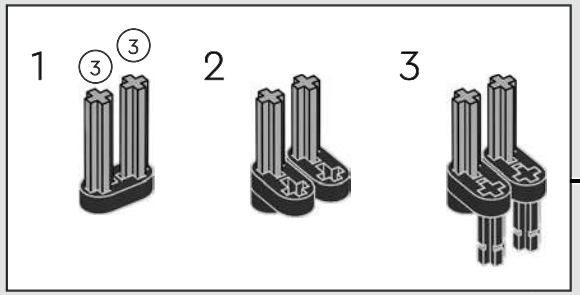

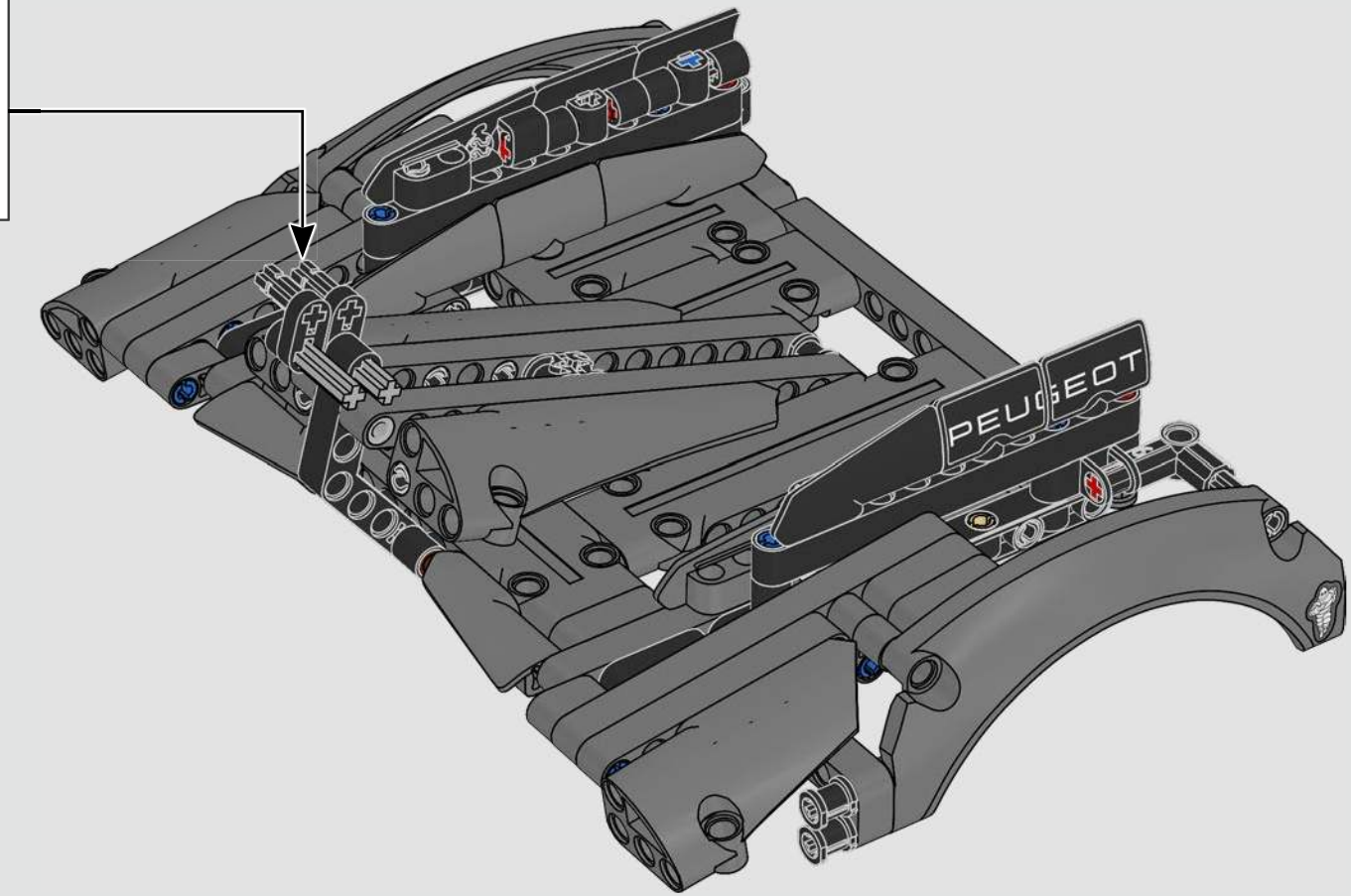

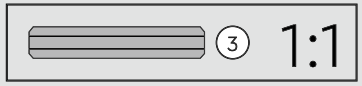

476

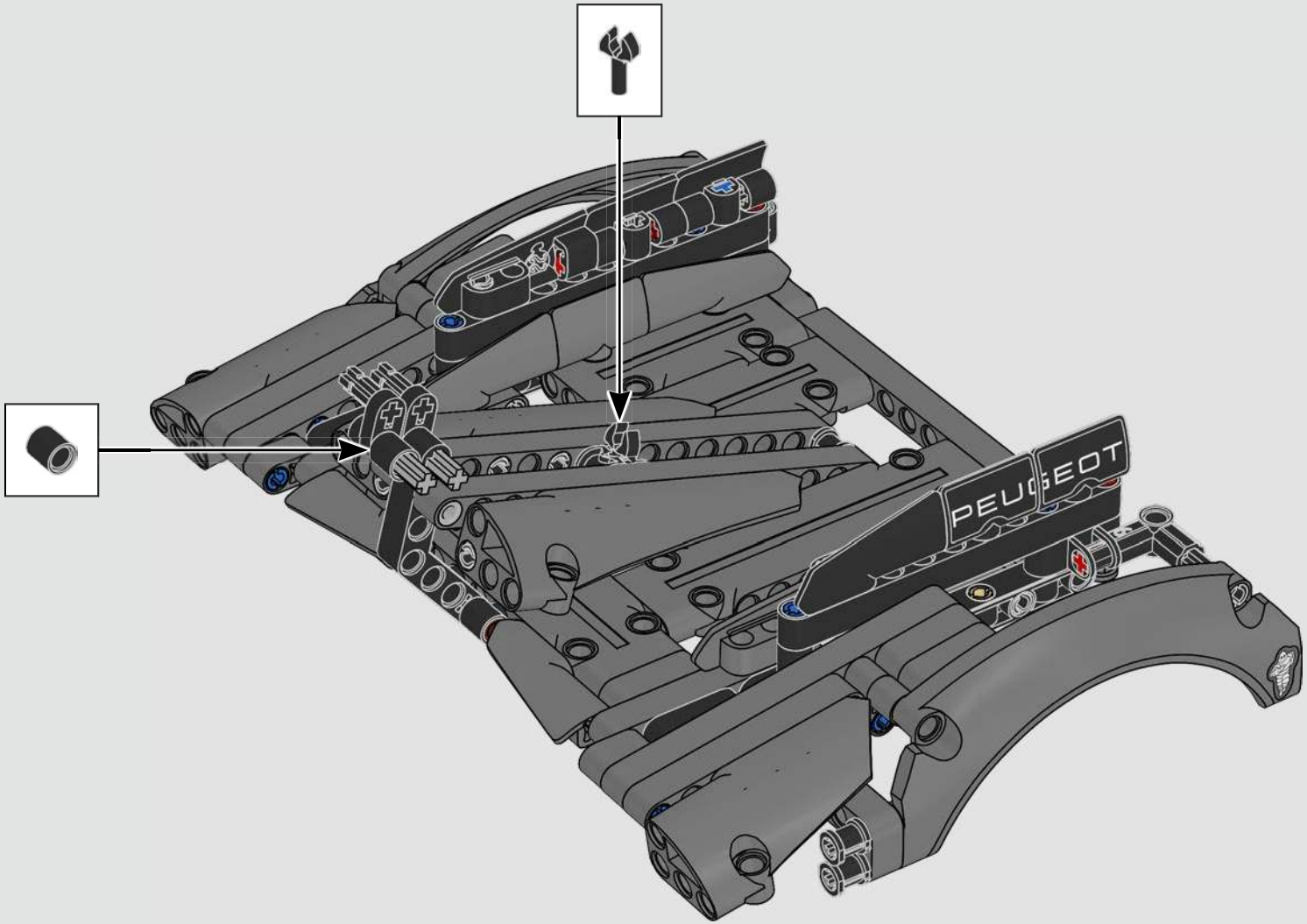

3x

477

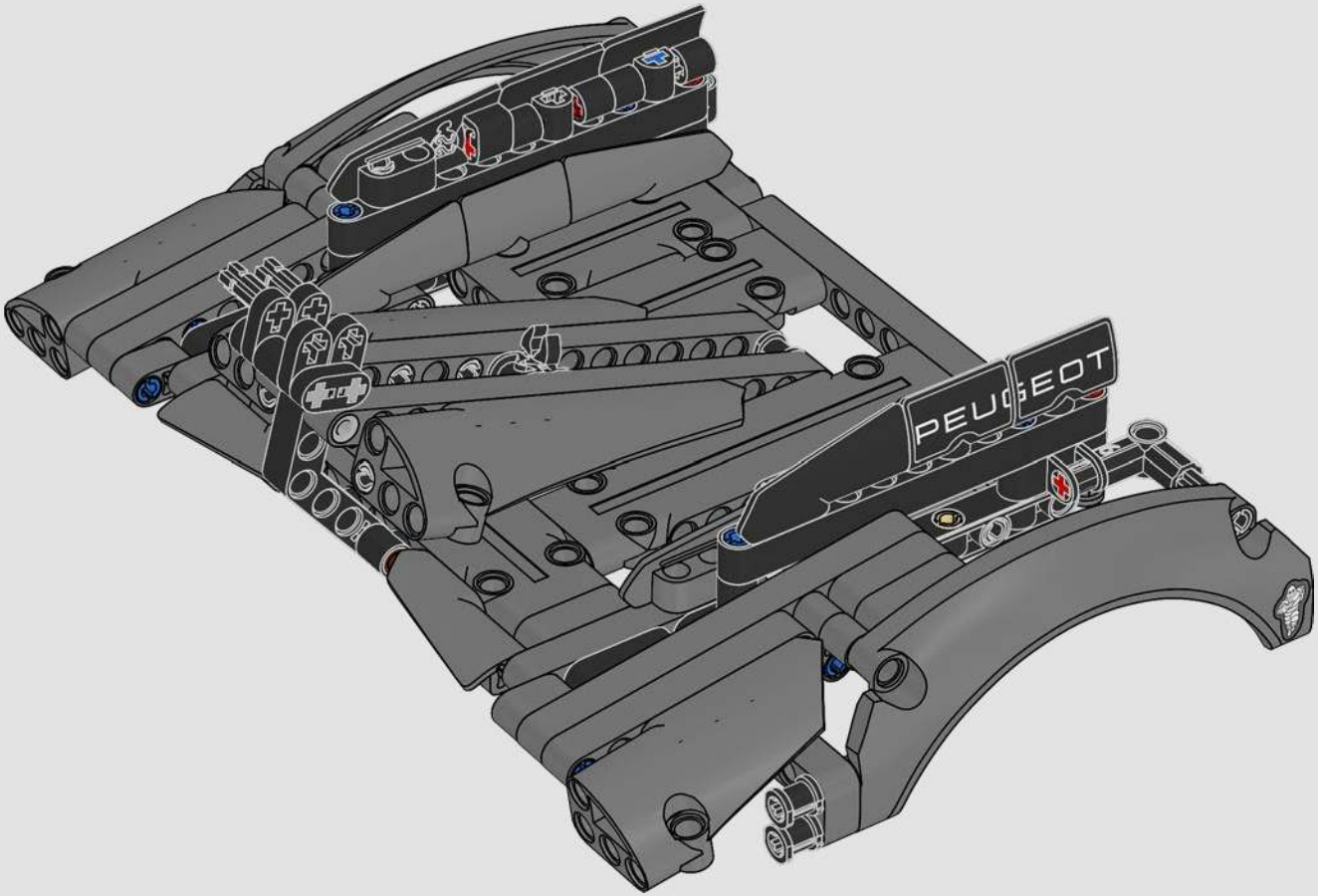

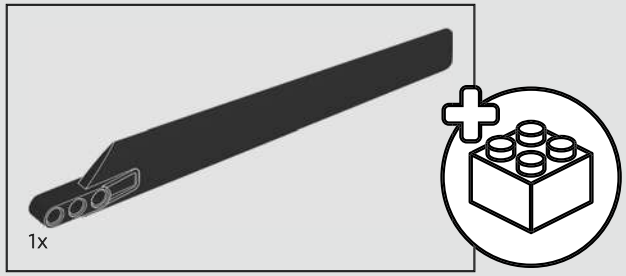
1x

478

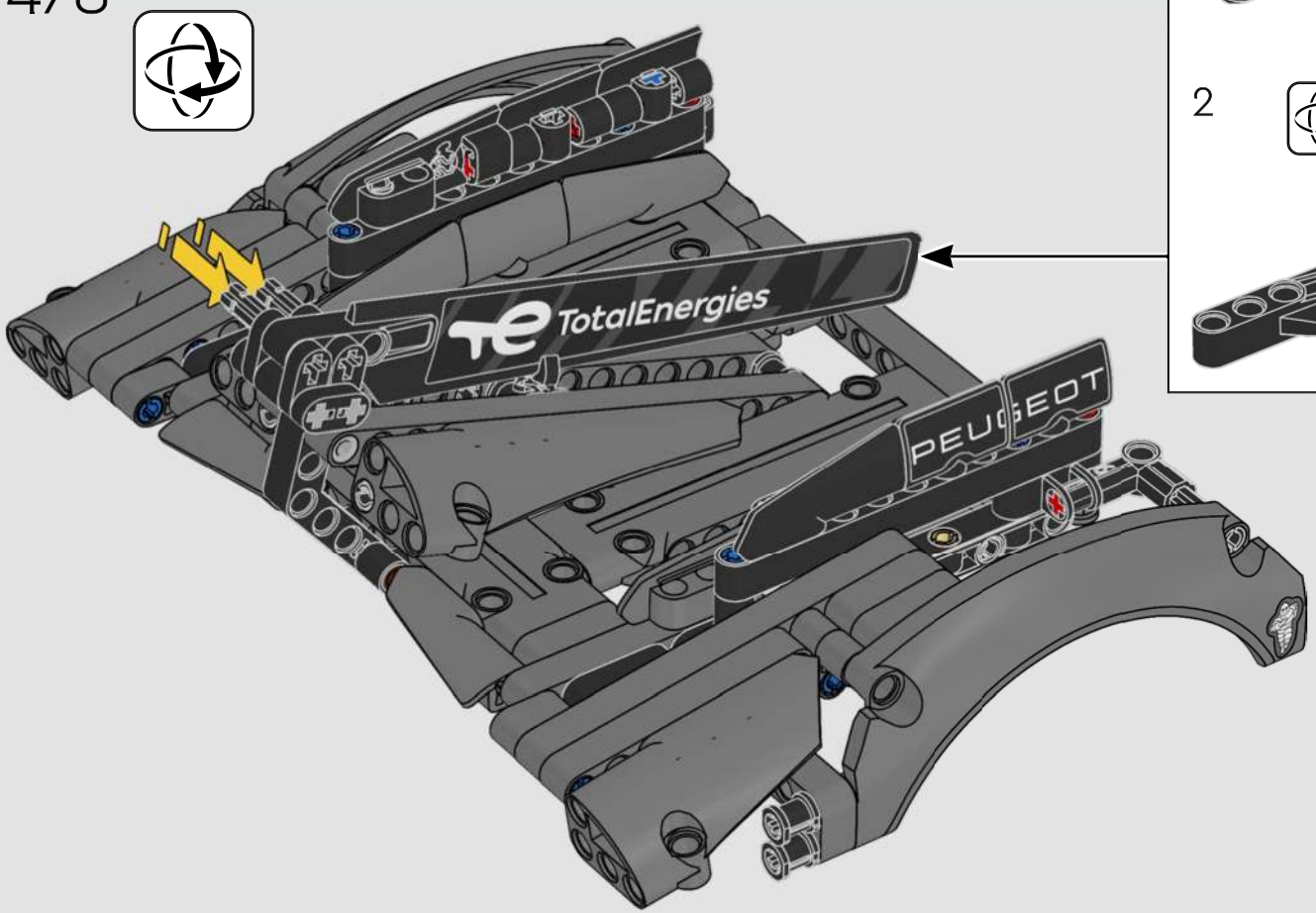
TotalEnergies
PEUGEOT

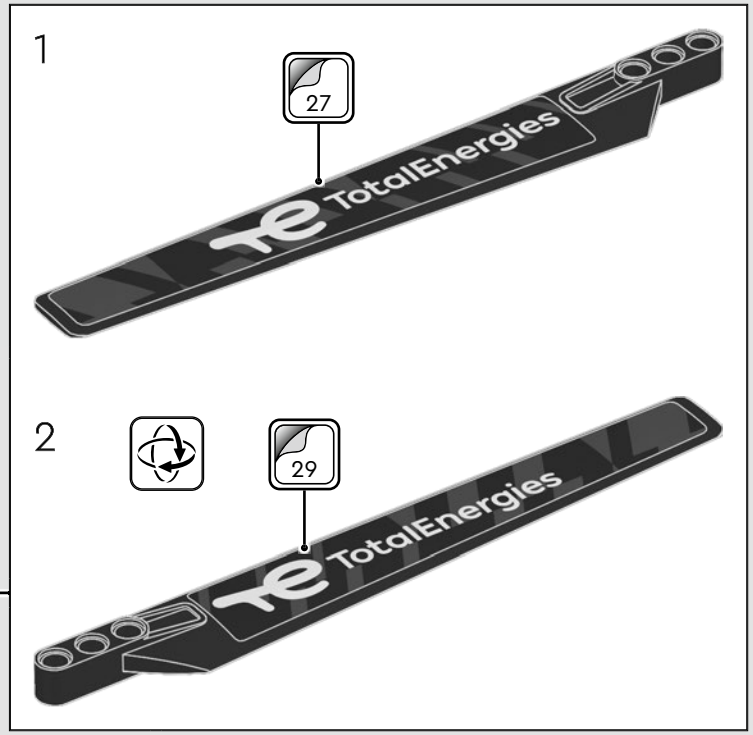
1
27
TotalEnergies
2
29
TotalEnergies

479

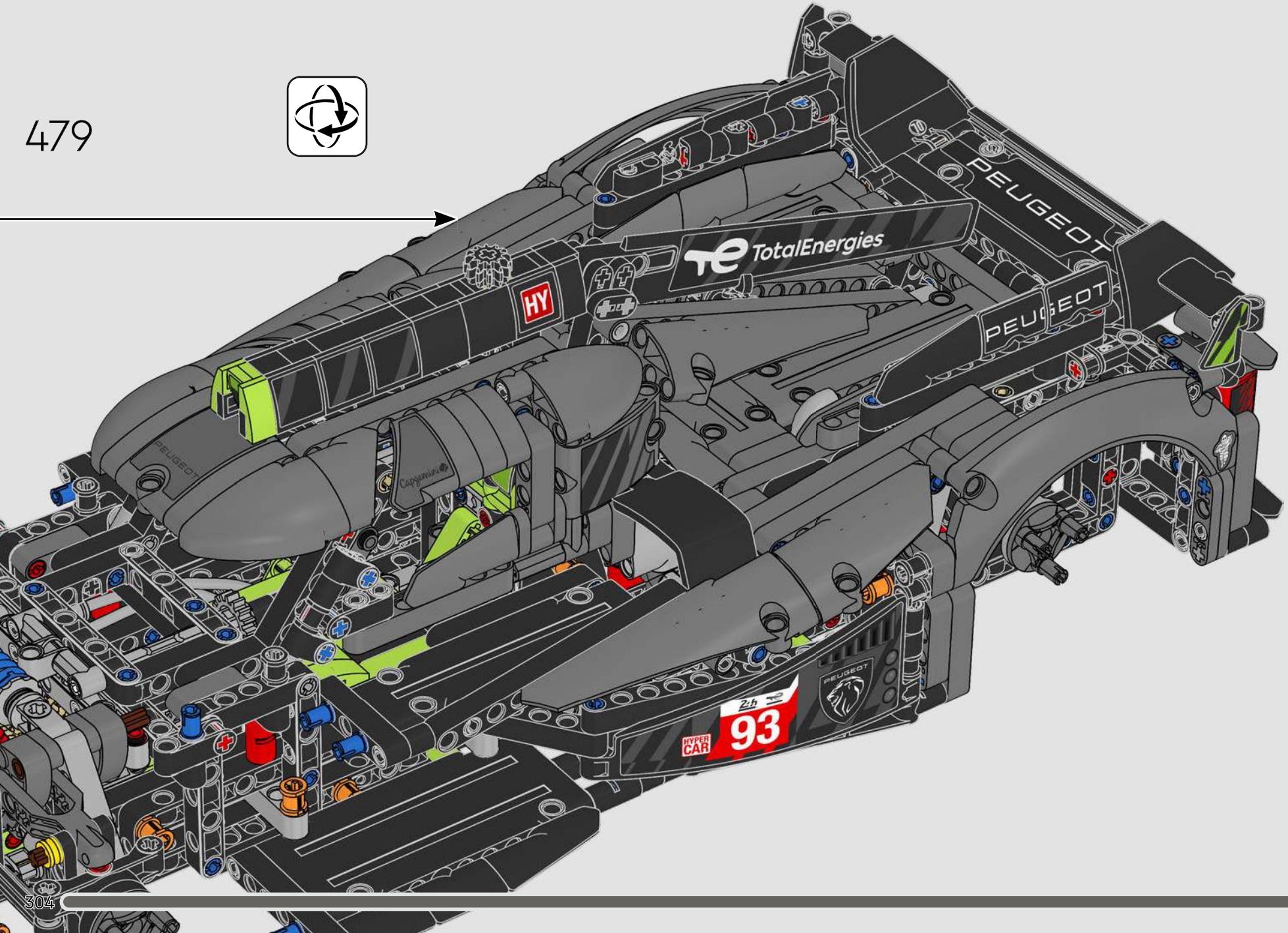

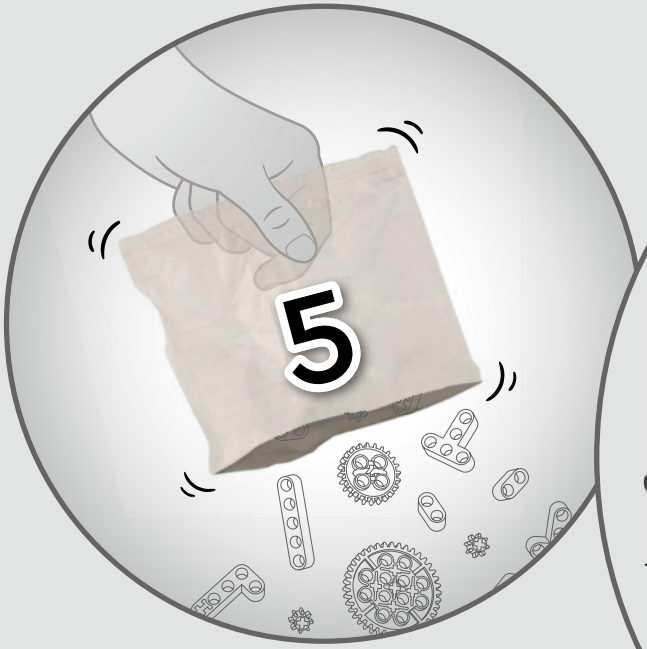
5

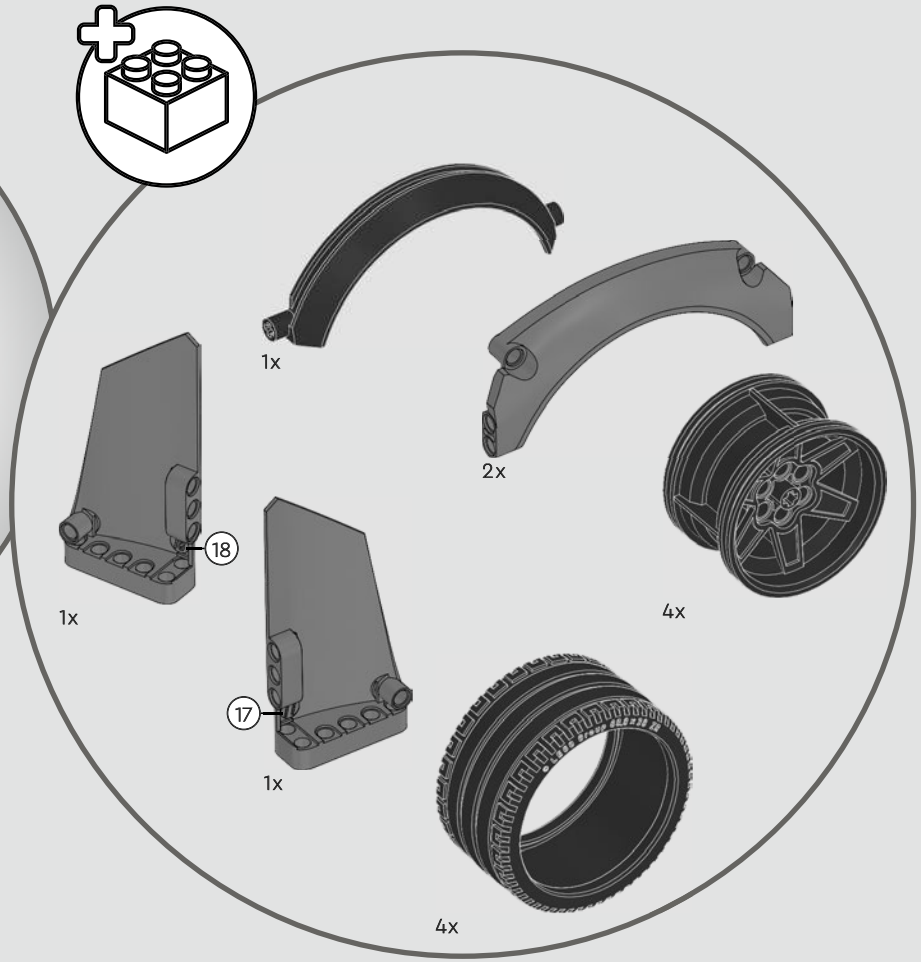
1x
2x
18
1x
4x
17
1x
4x

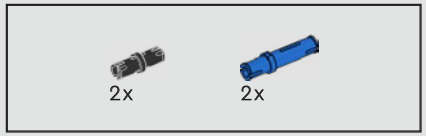

480

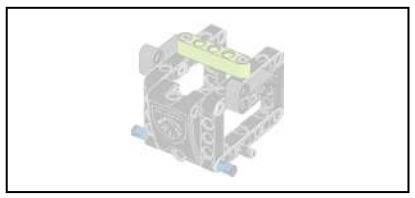

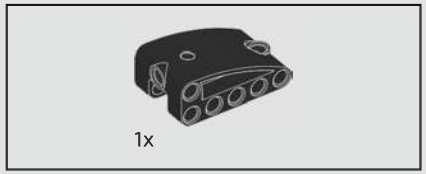

481

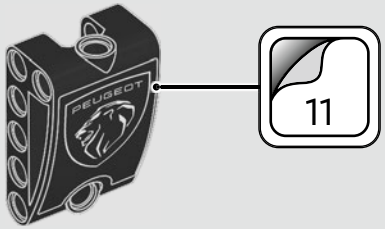

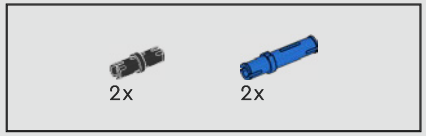

482

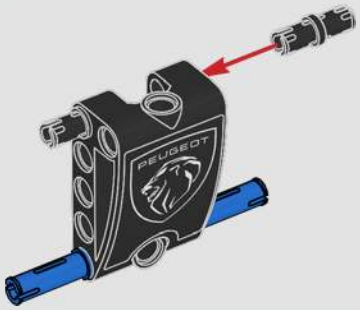

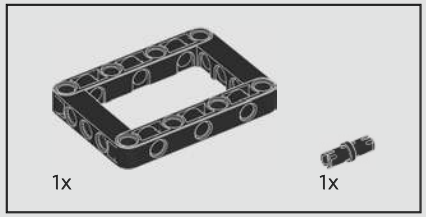

483

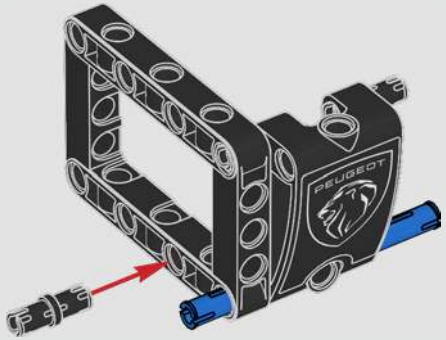

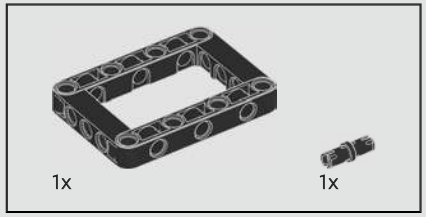

484

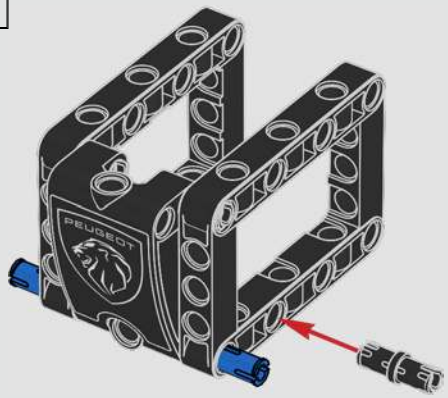

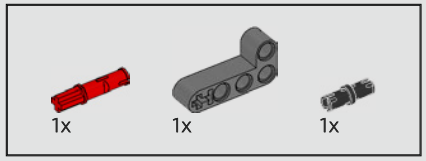

485

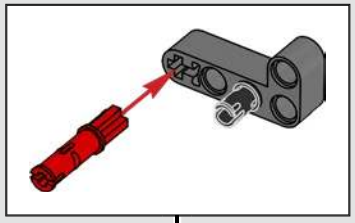

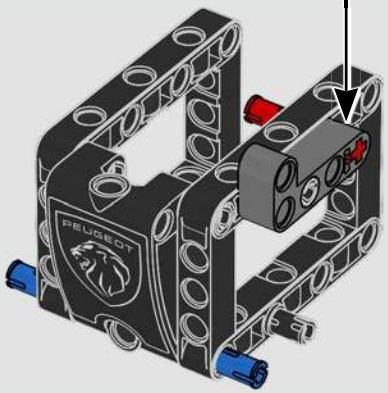

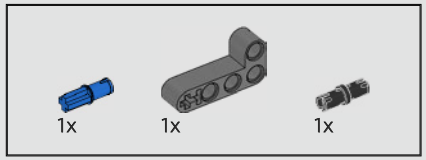

486

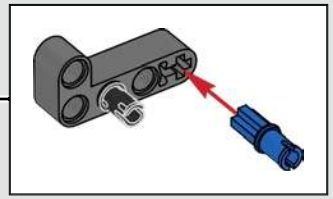

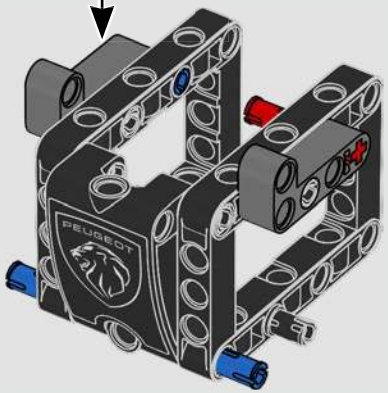

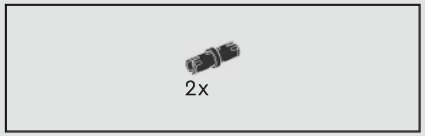

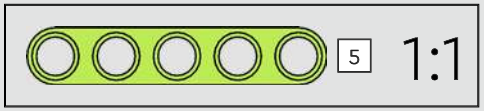

487

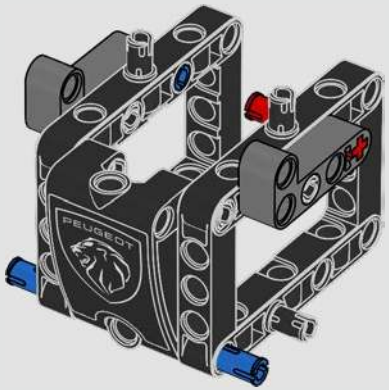

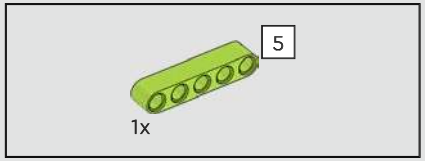

488

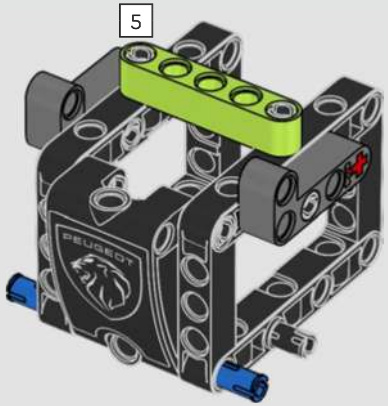

489

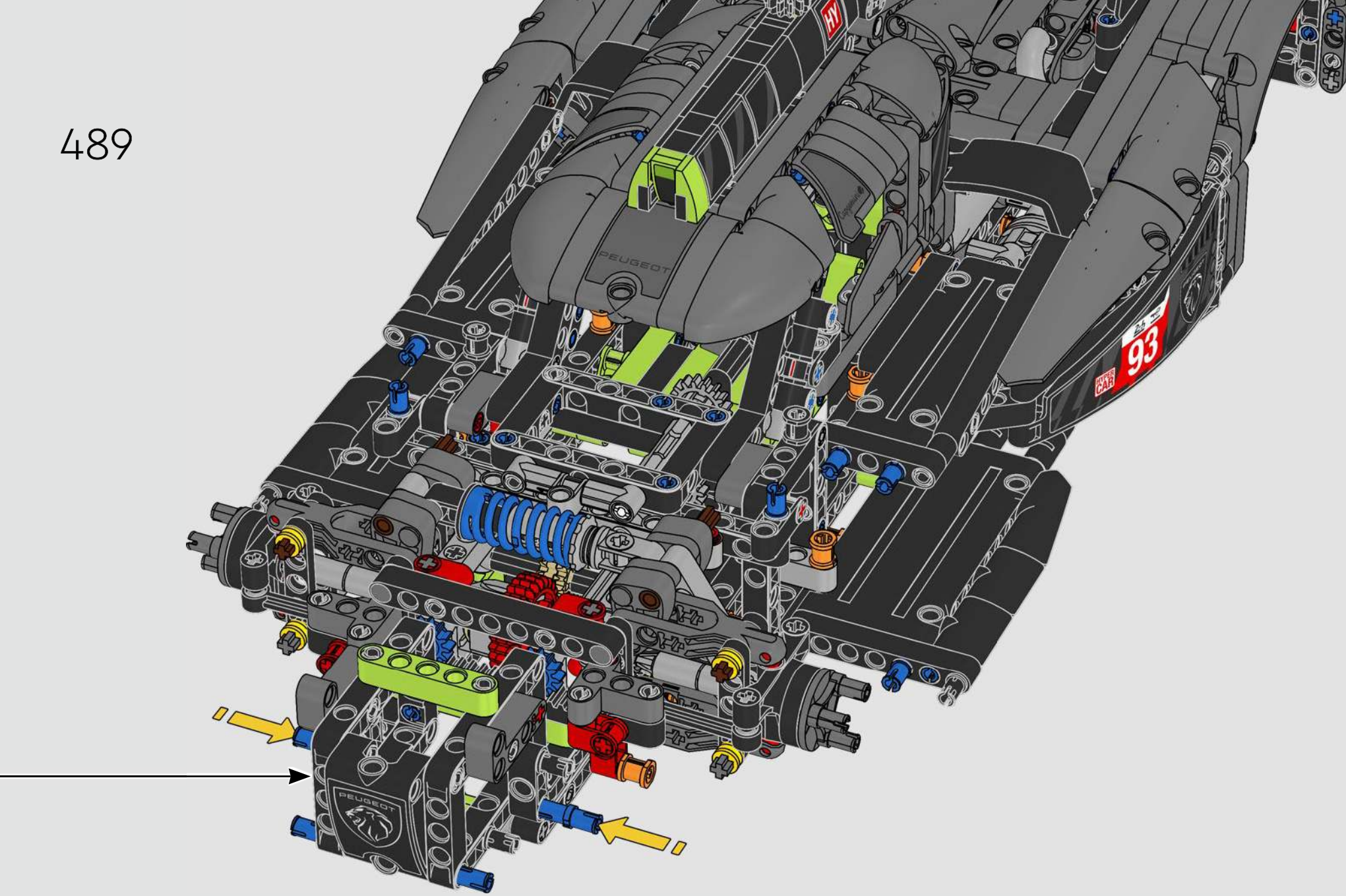

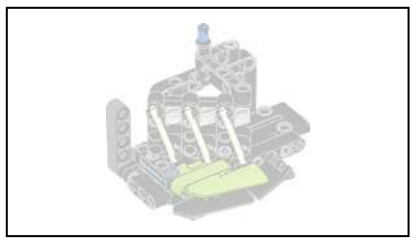

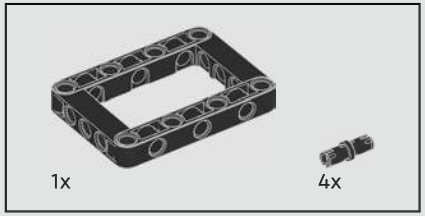

490

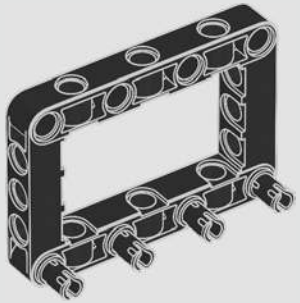

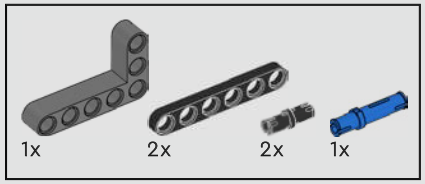

491

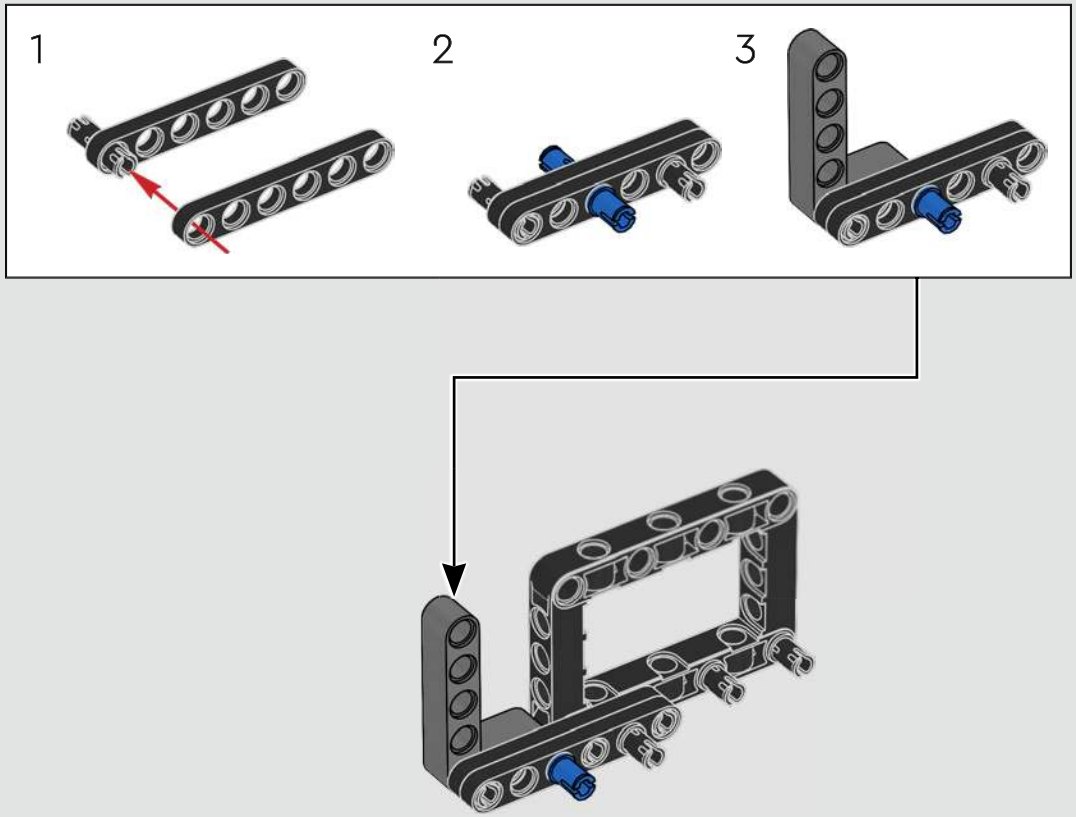

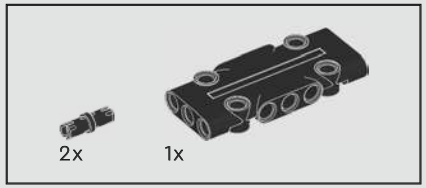

492

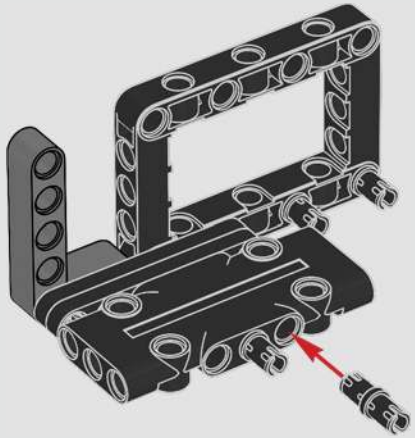

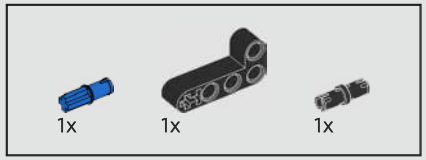

493

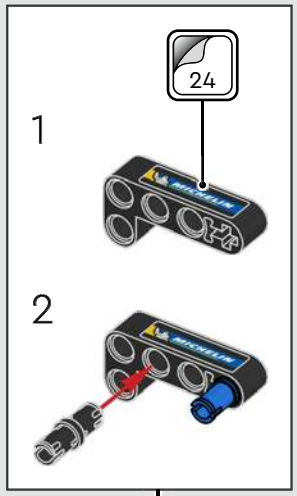

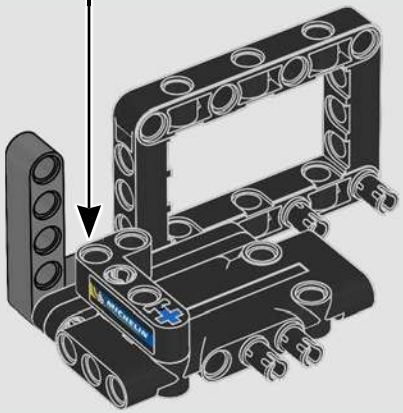

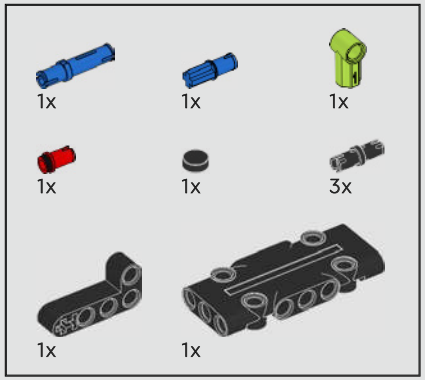

494

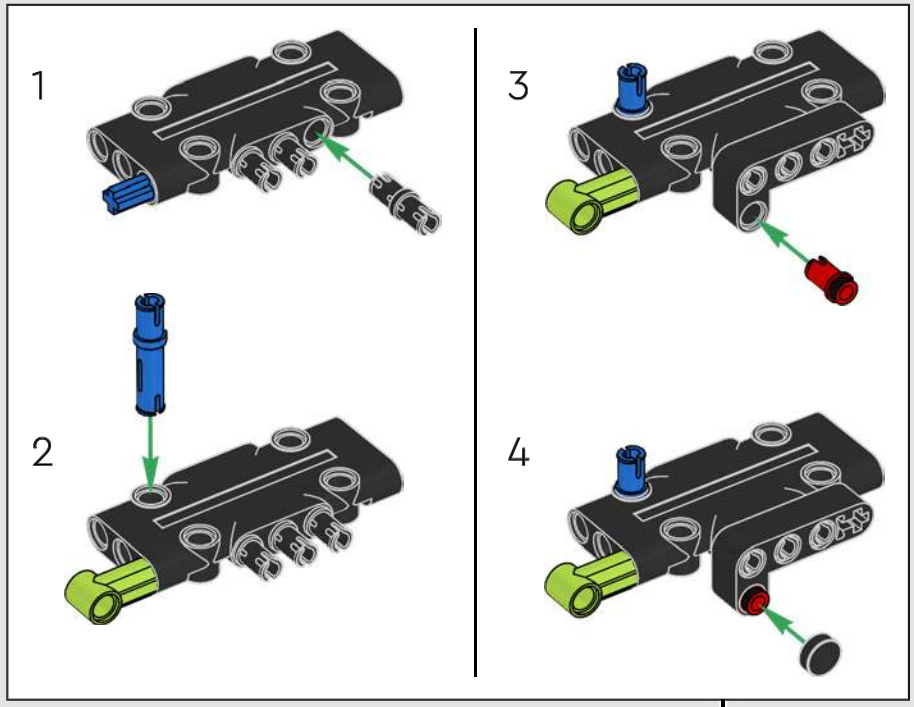

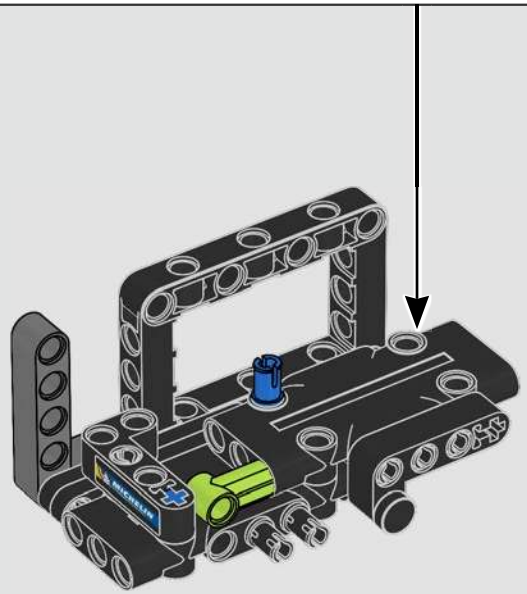

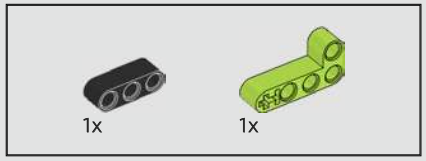

495

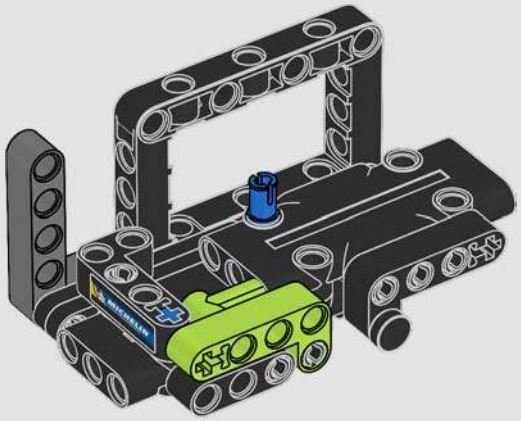

496

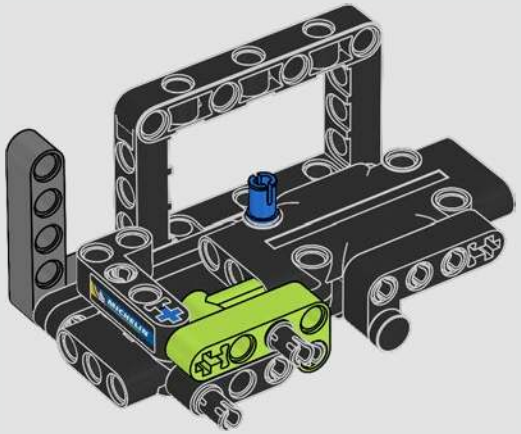

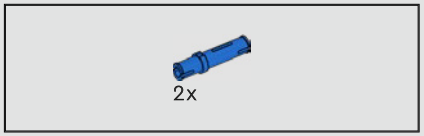

497

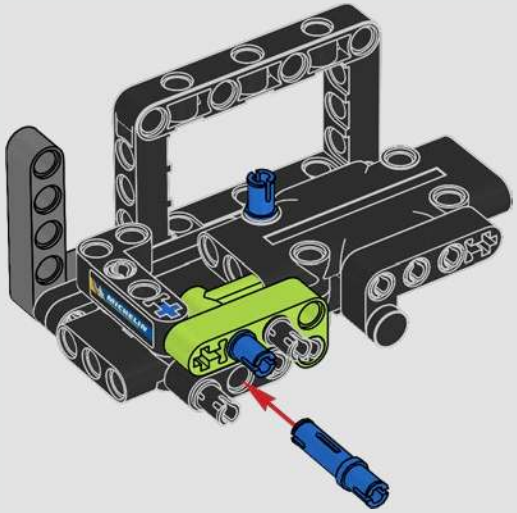

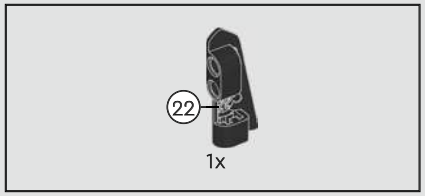

498

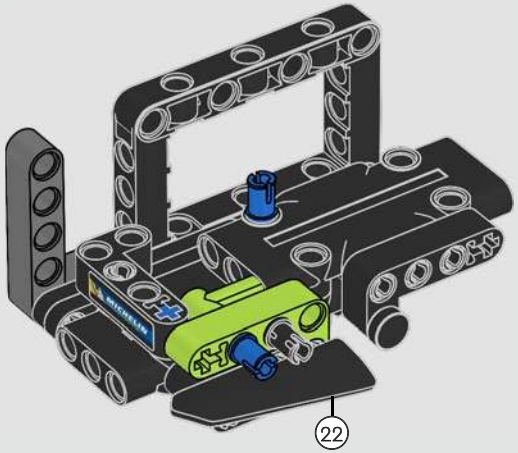

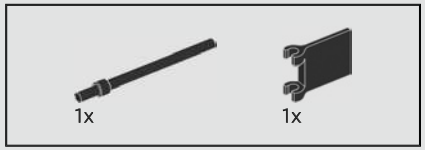

499

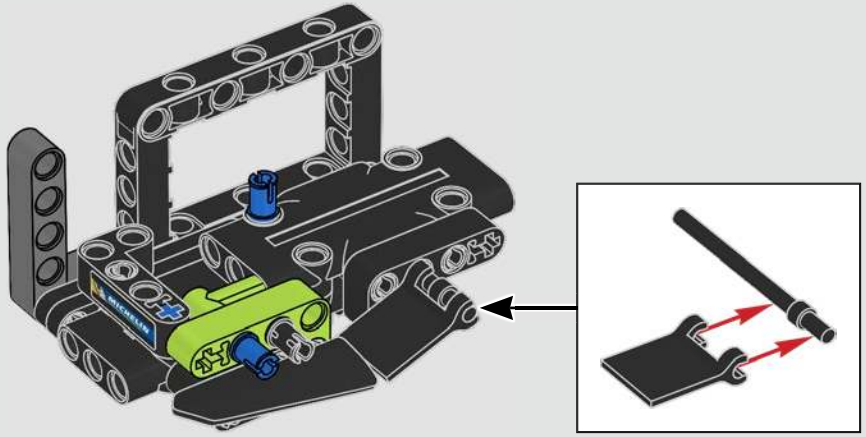

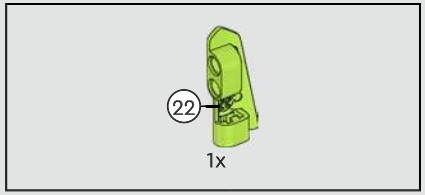

500

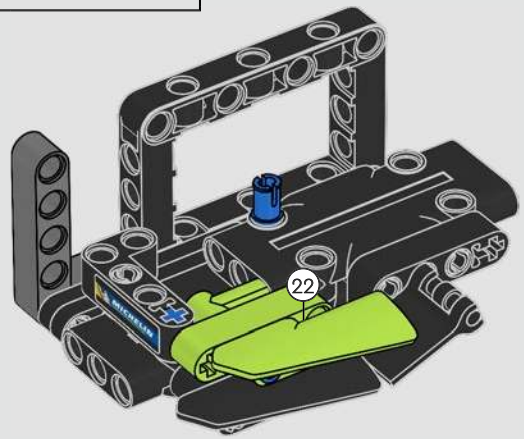

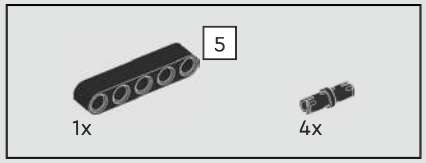

501

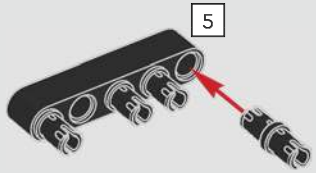

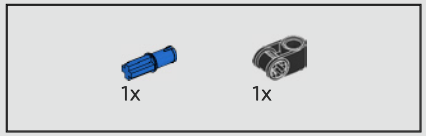

502

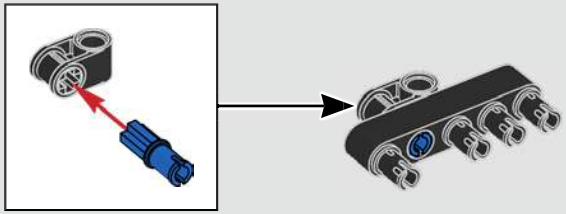

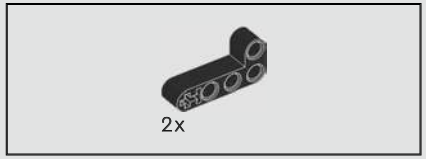

503

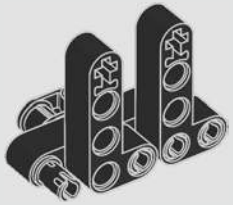

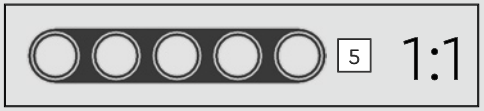

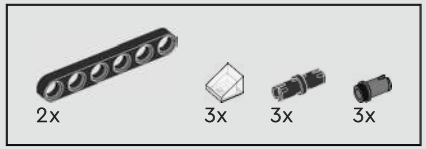

504

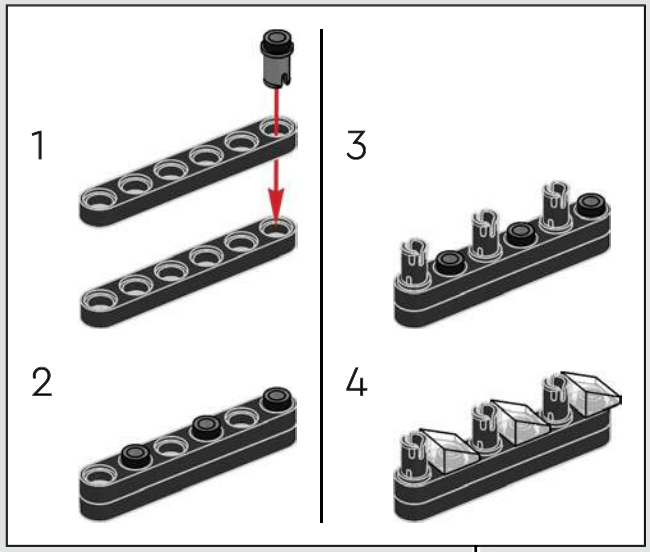

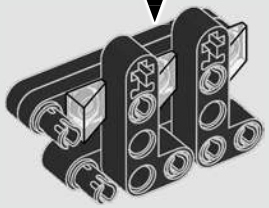

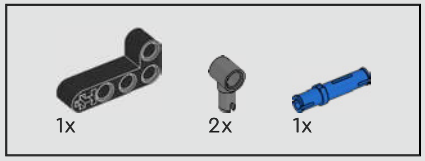

505

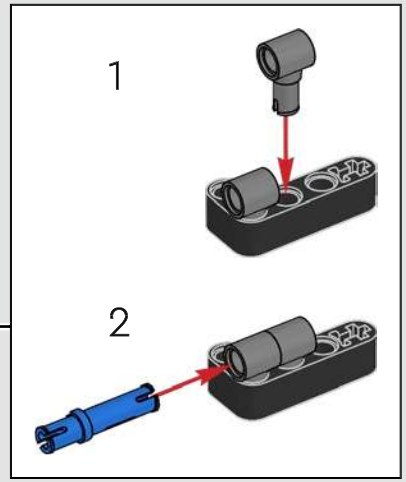

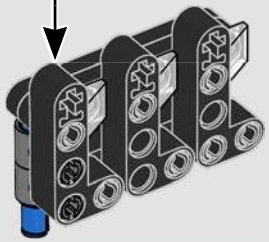

506

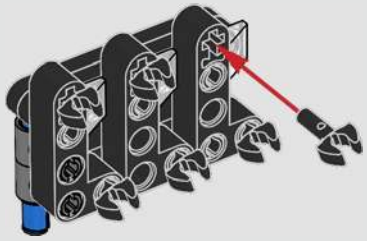

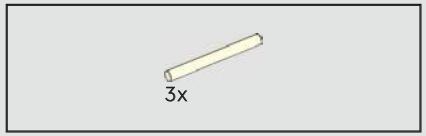

507

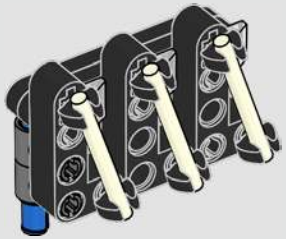

508

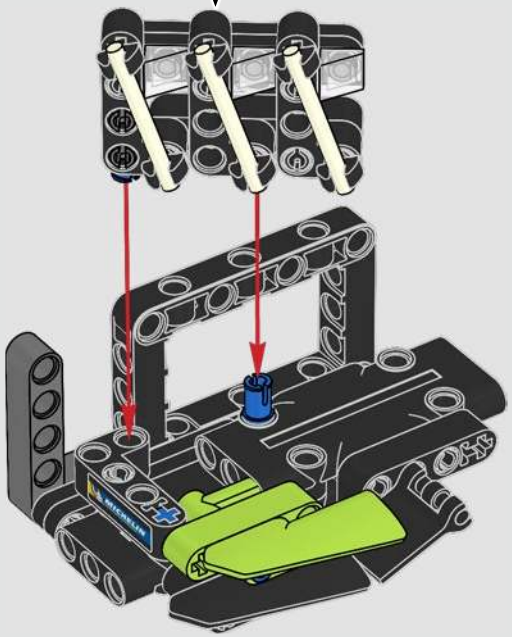

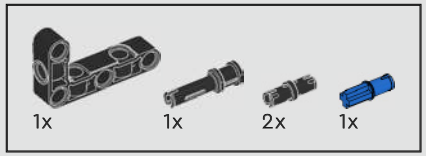

509

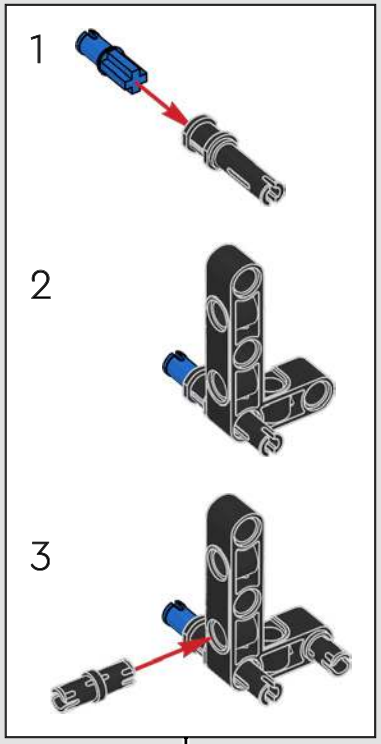

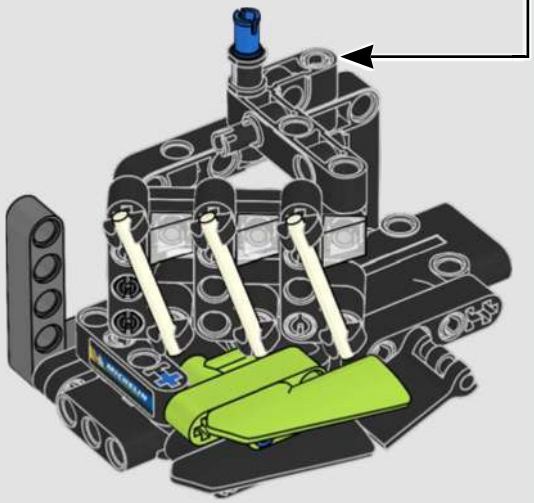

510

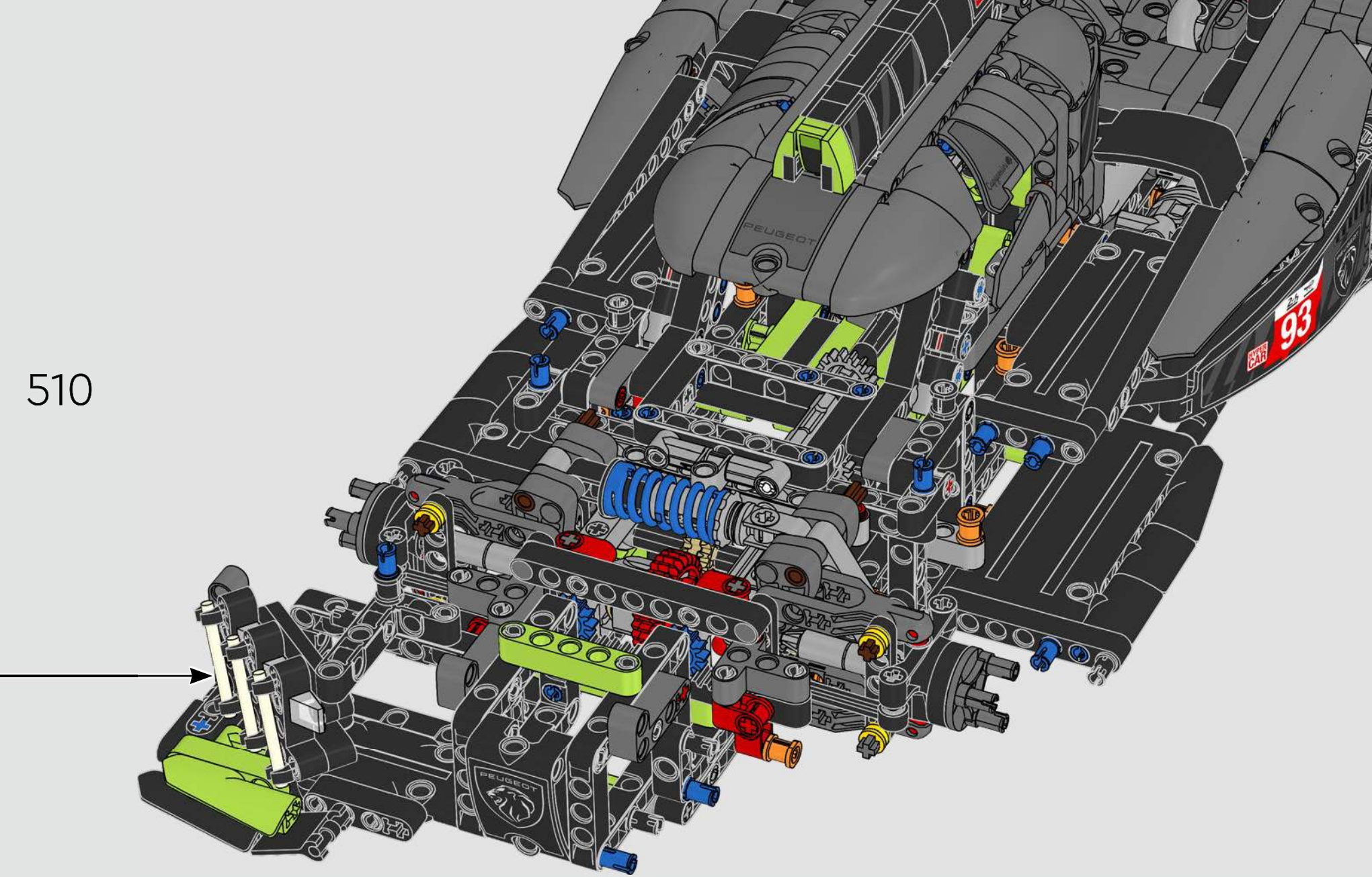

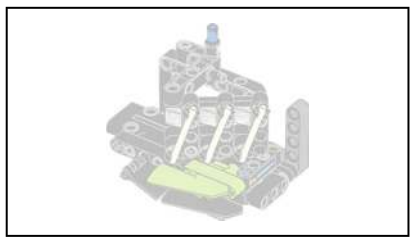

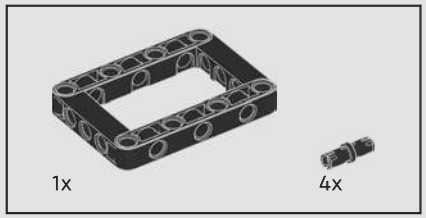

511

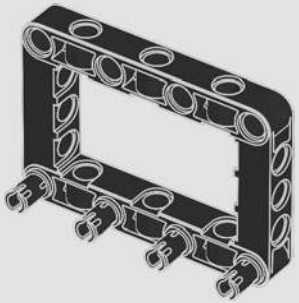

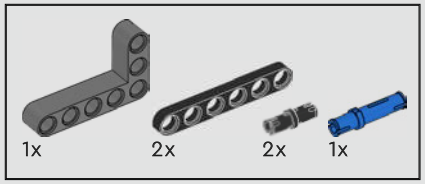

512

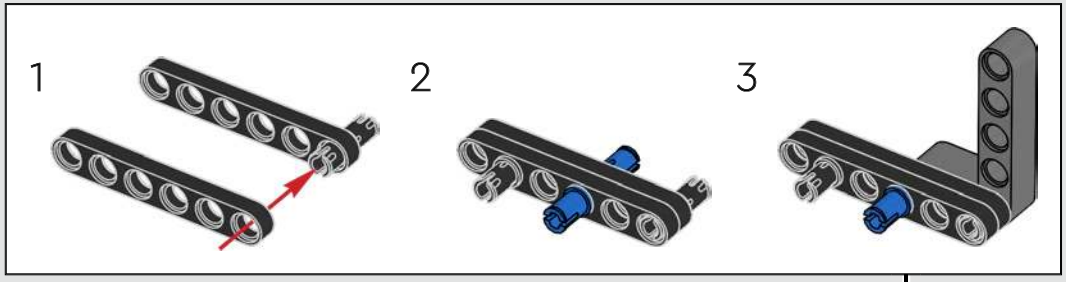

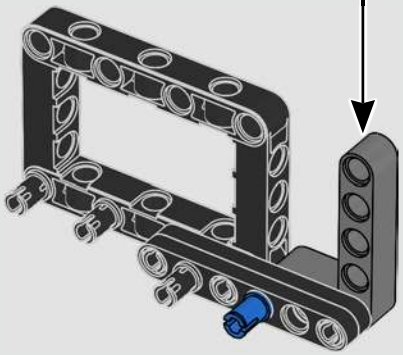

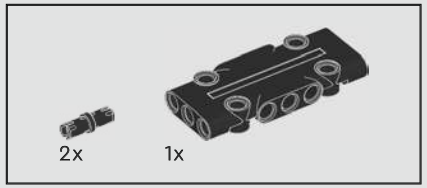

513

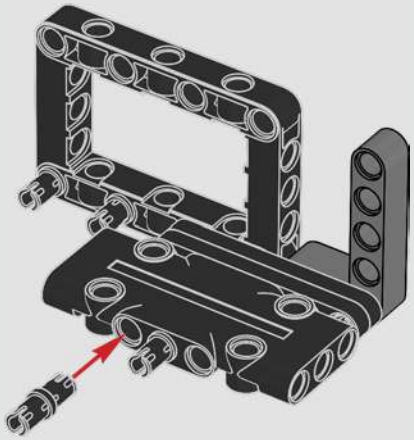

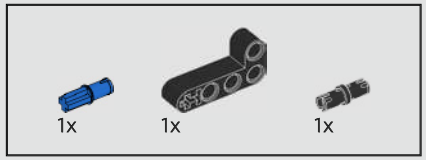

514

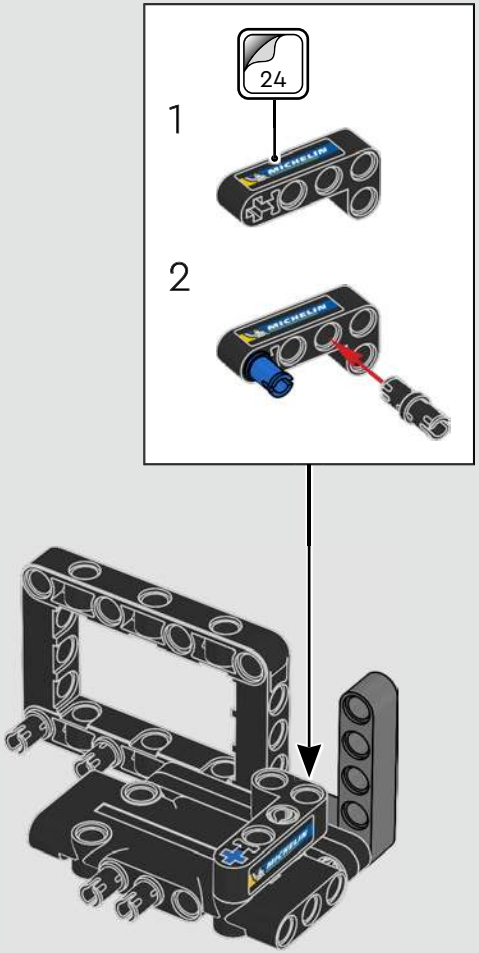

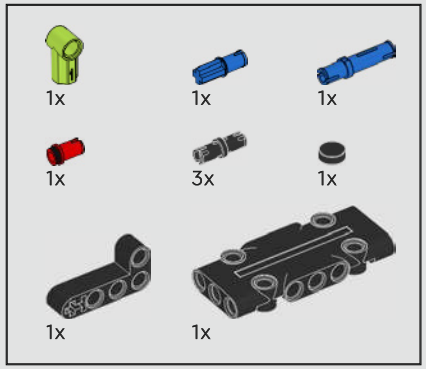

515

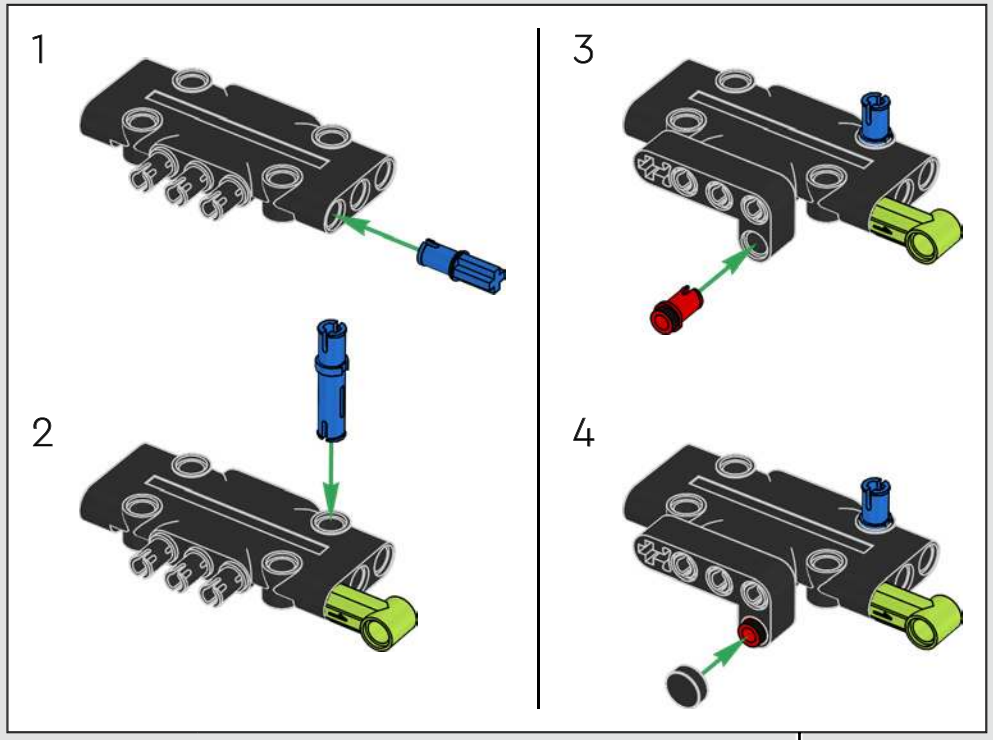

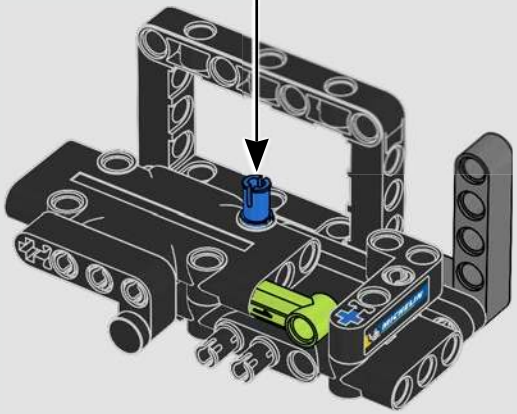

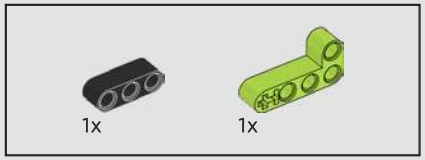

516

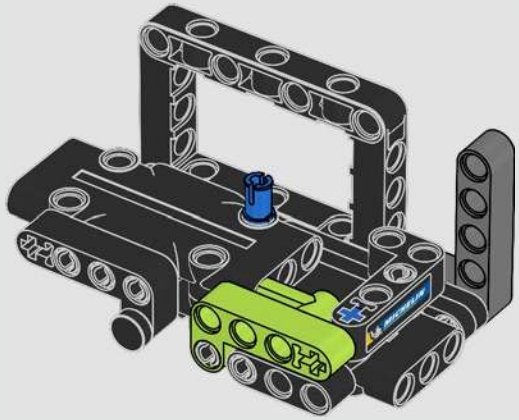

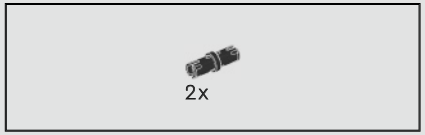

517

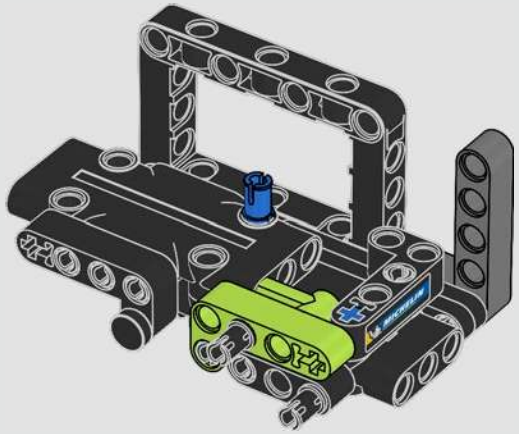

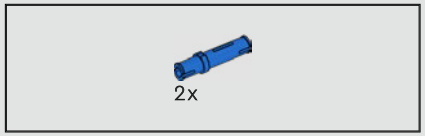

518

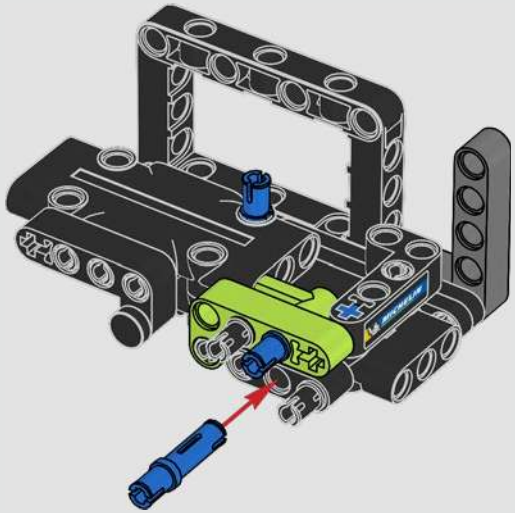

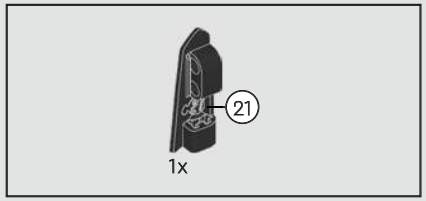

519

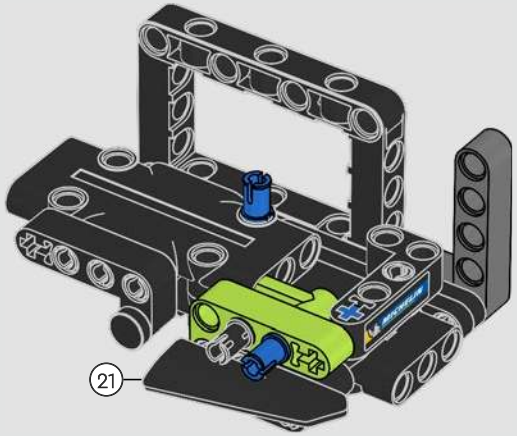

520

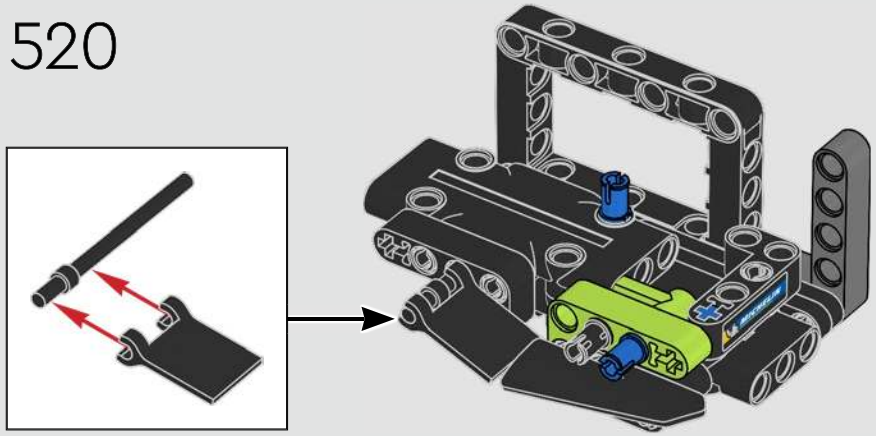

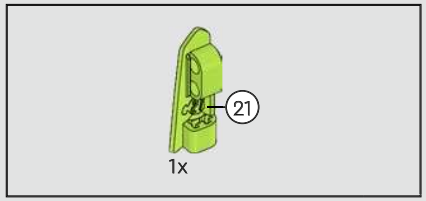

521

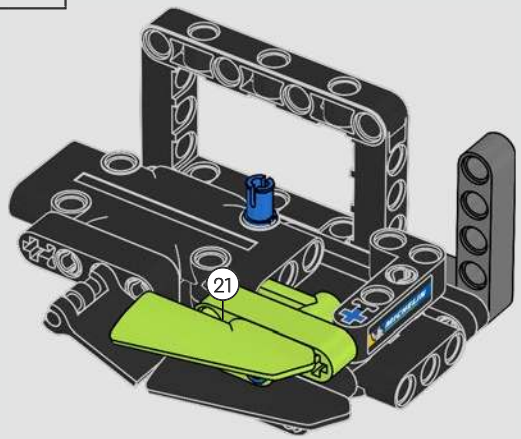

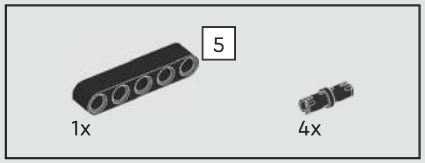

522

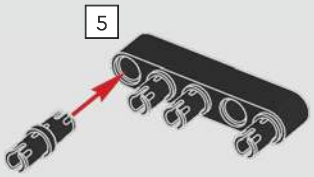

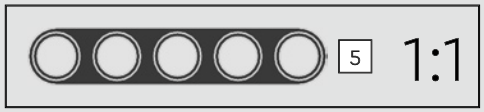

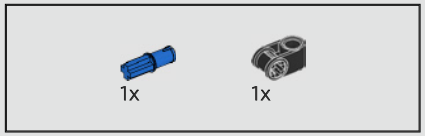

523

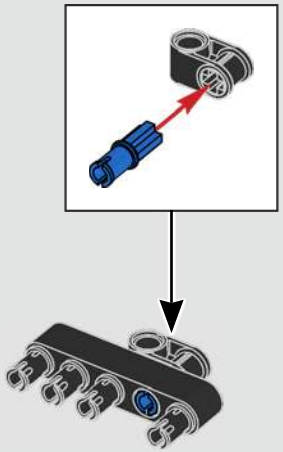

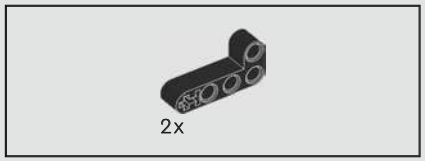

524

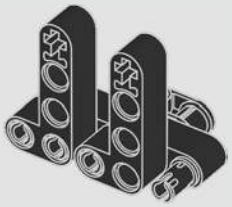

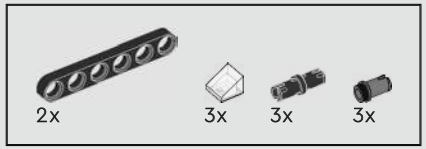

525

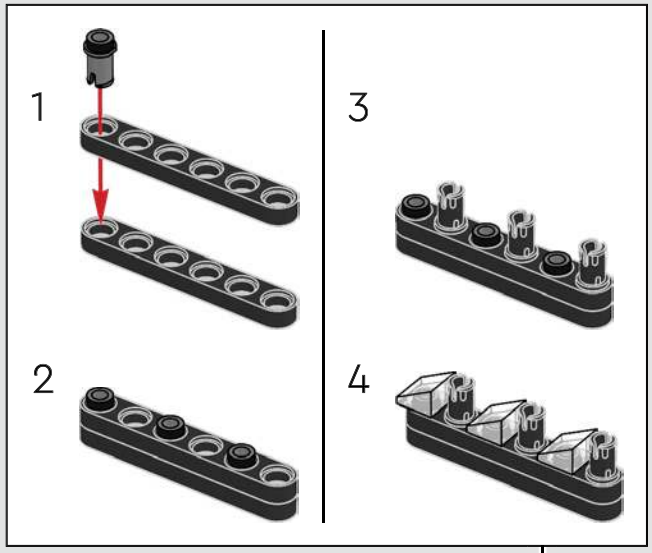

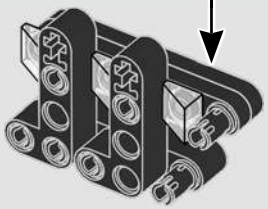

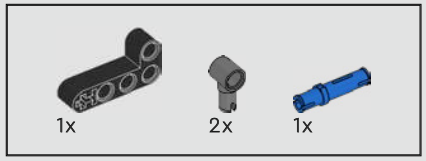

526

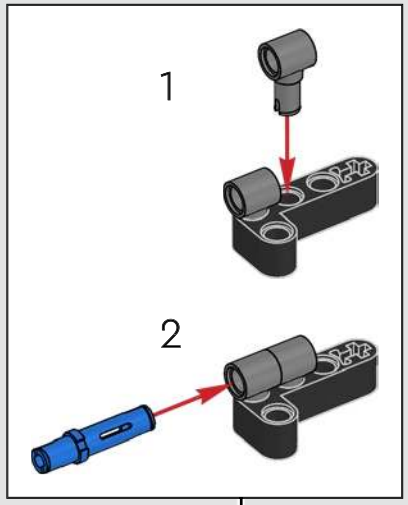

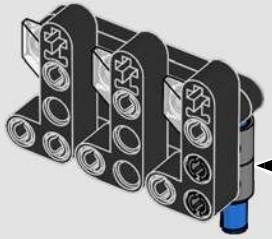

527

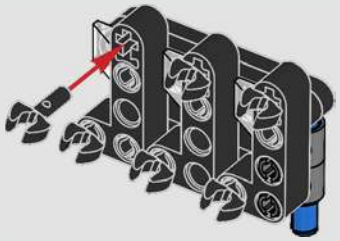

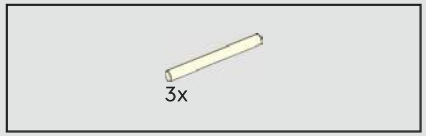

528

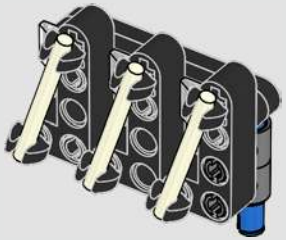

529

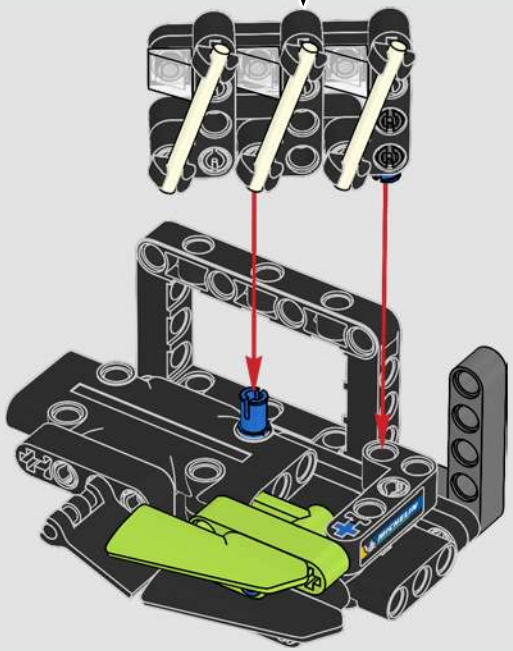

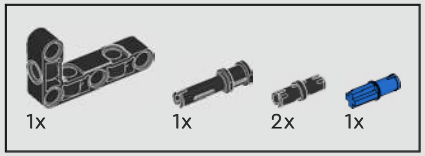

530

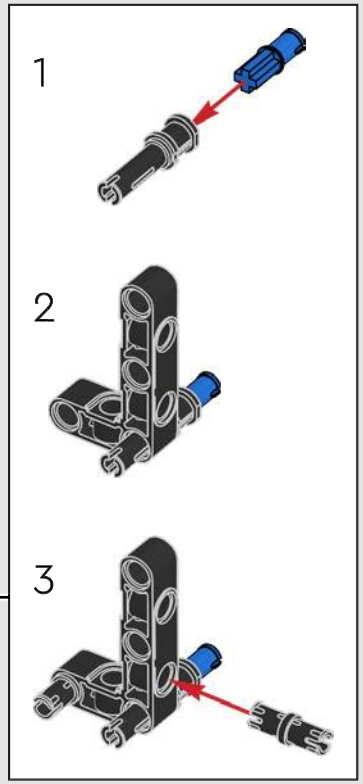

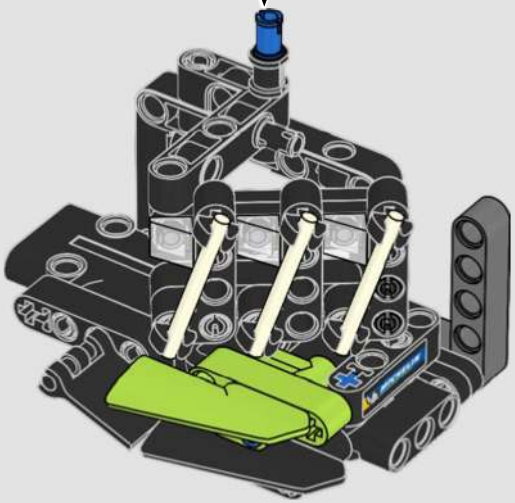

531

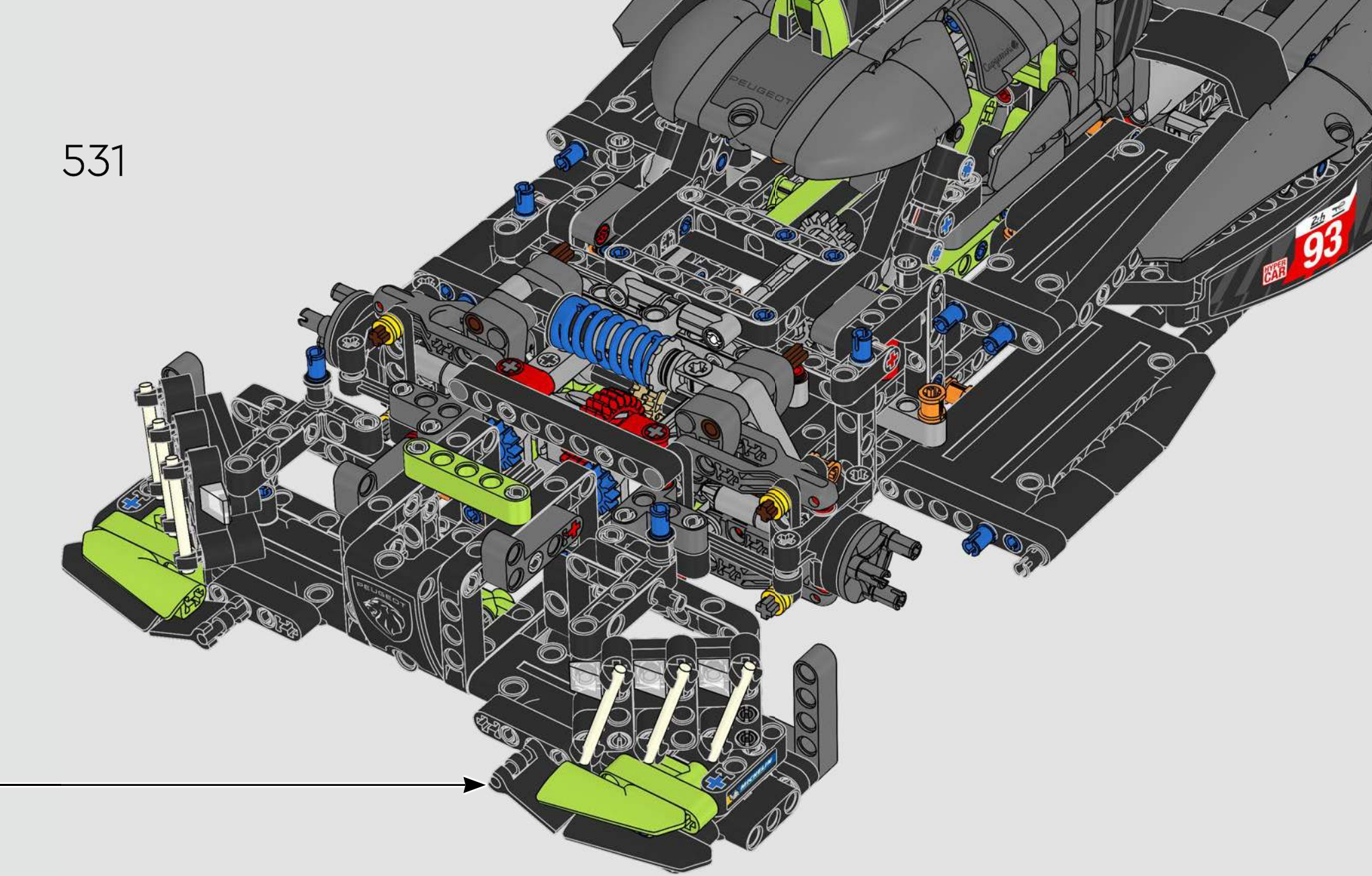

532

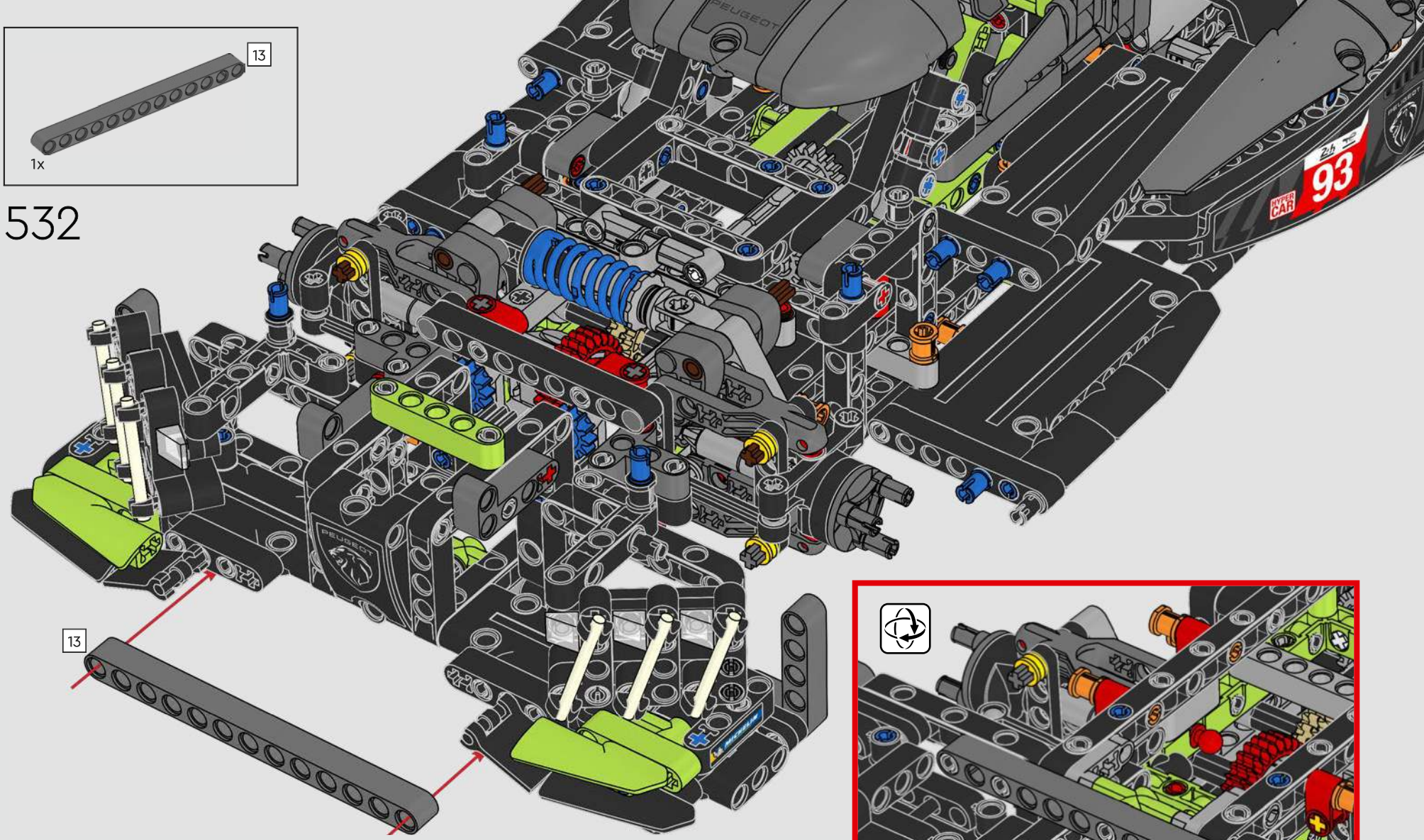

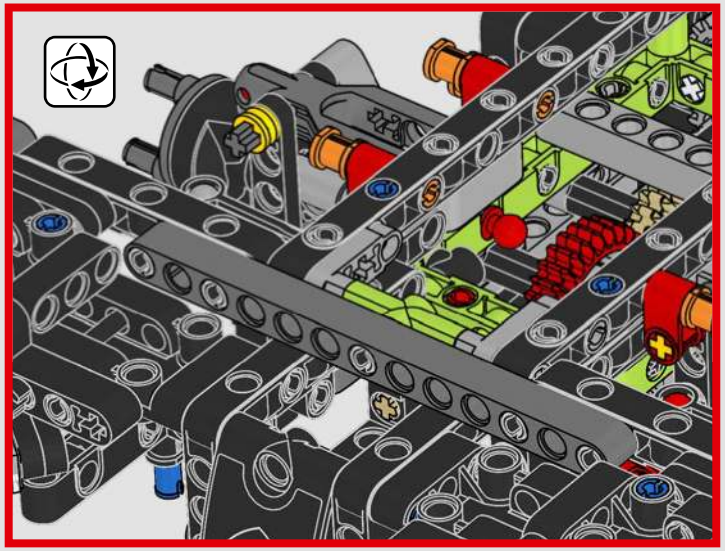

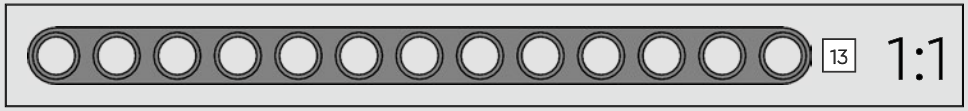

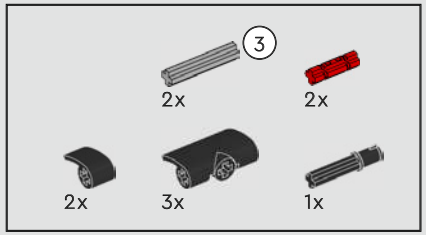

533

1

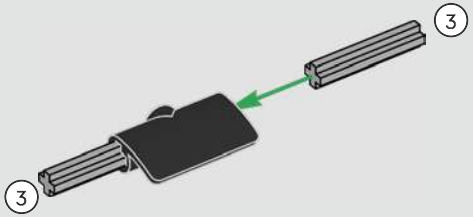

2

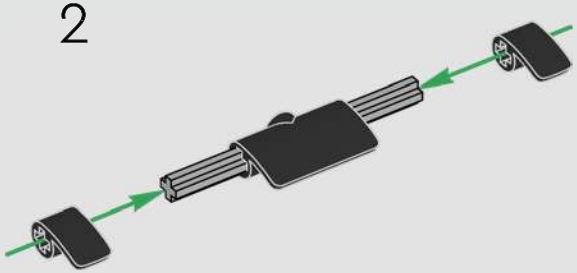

3

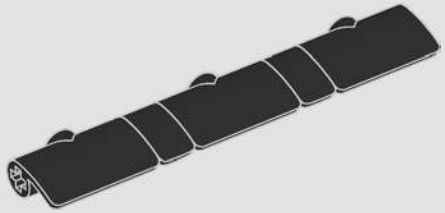

4

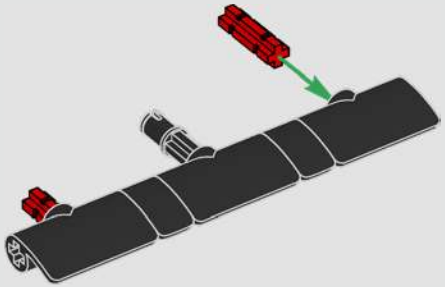

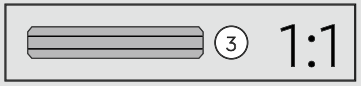

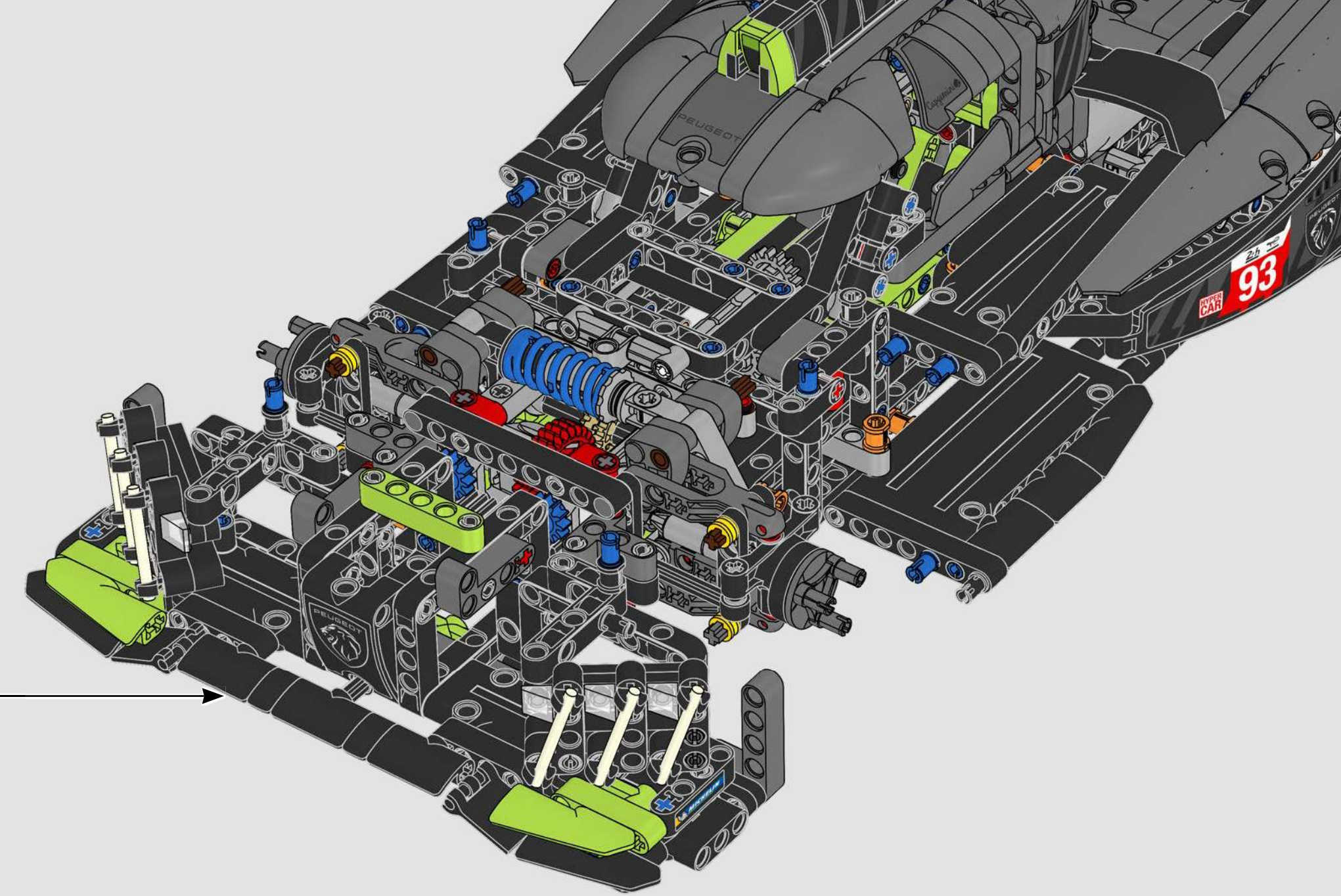
PEUGEOT
93
HYPER CAR

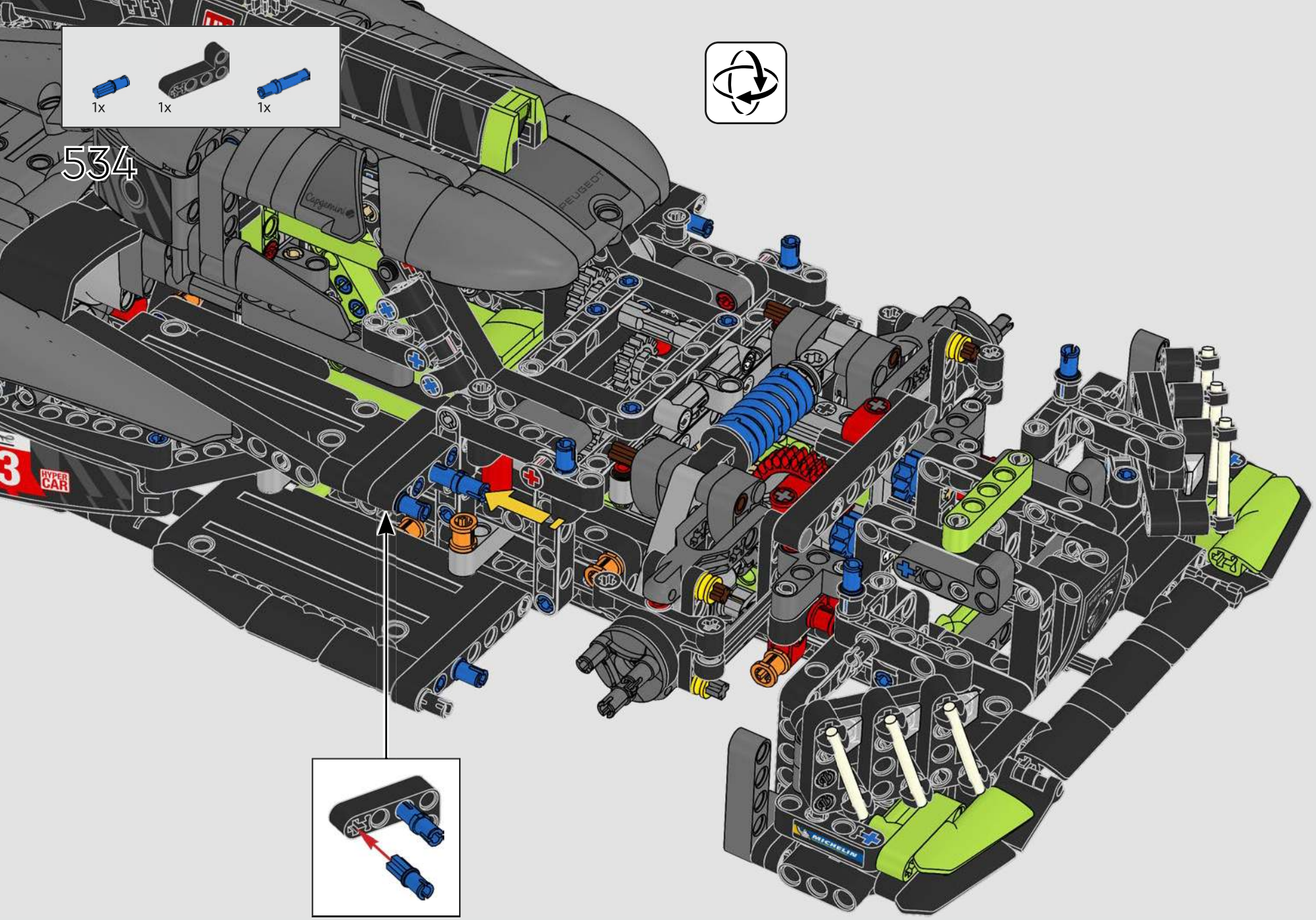
1x
1x
1x
534
HYPER CAR
PEUGEOT
MICHELIN

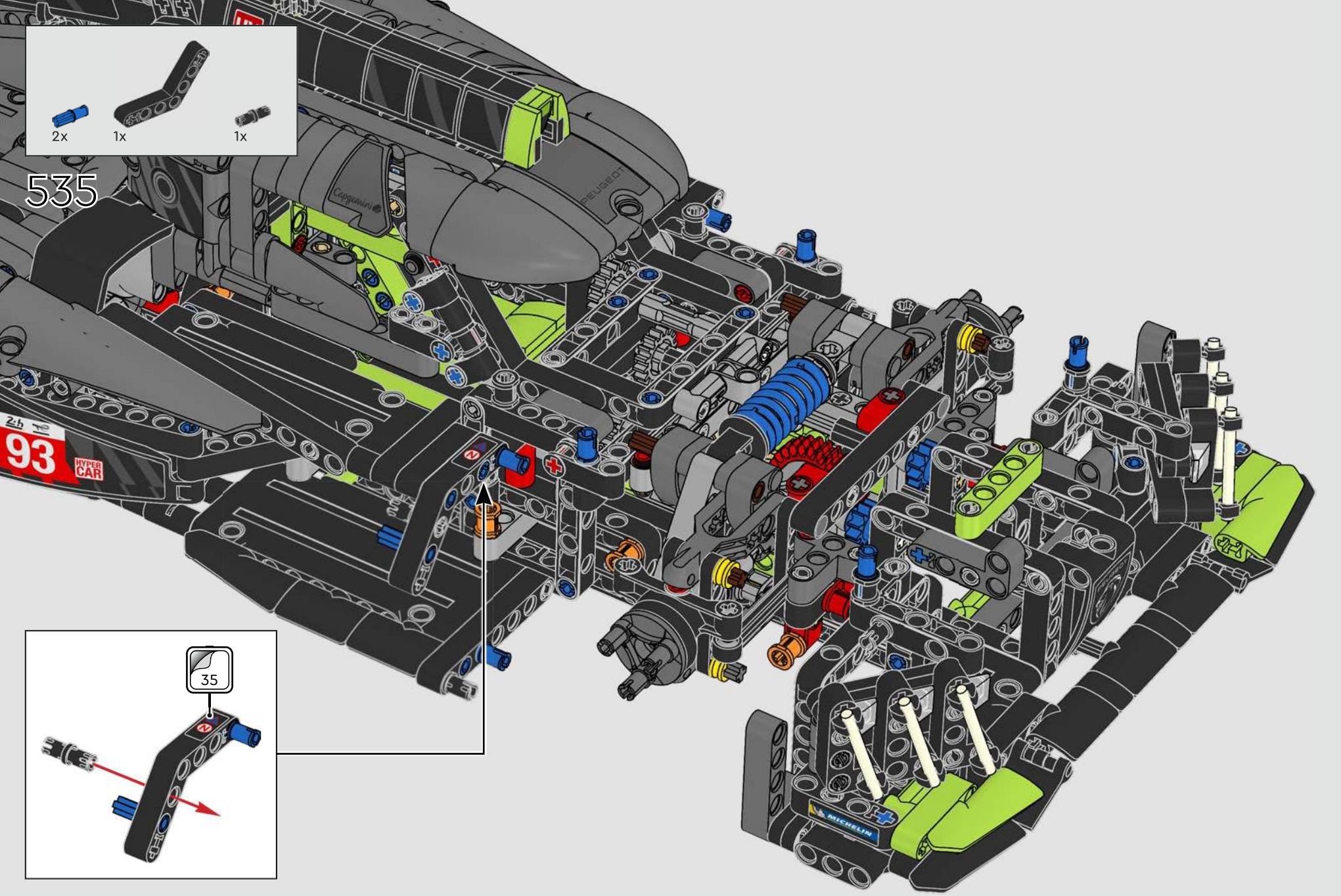
535
2x
1x
1x
35
93
HYPER CAR
PEUGEOT
MICHELIN

536

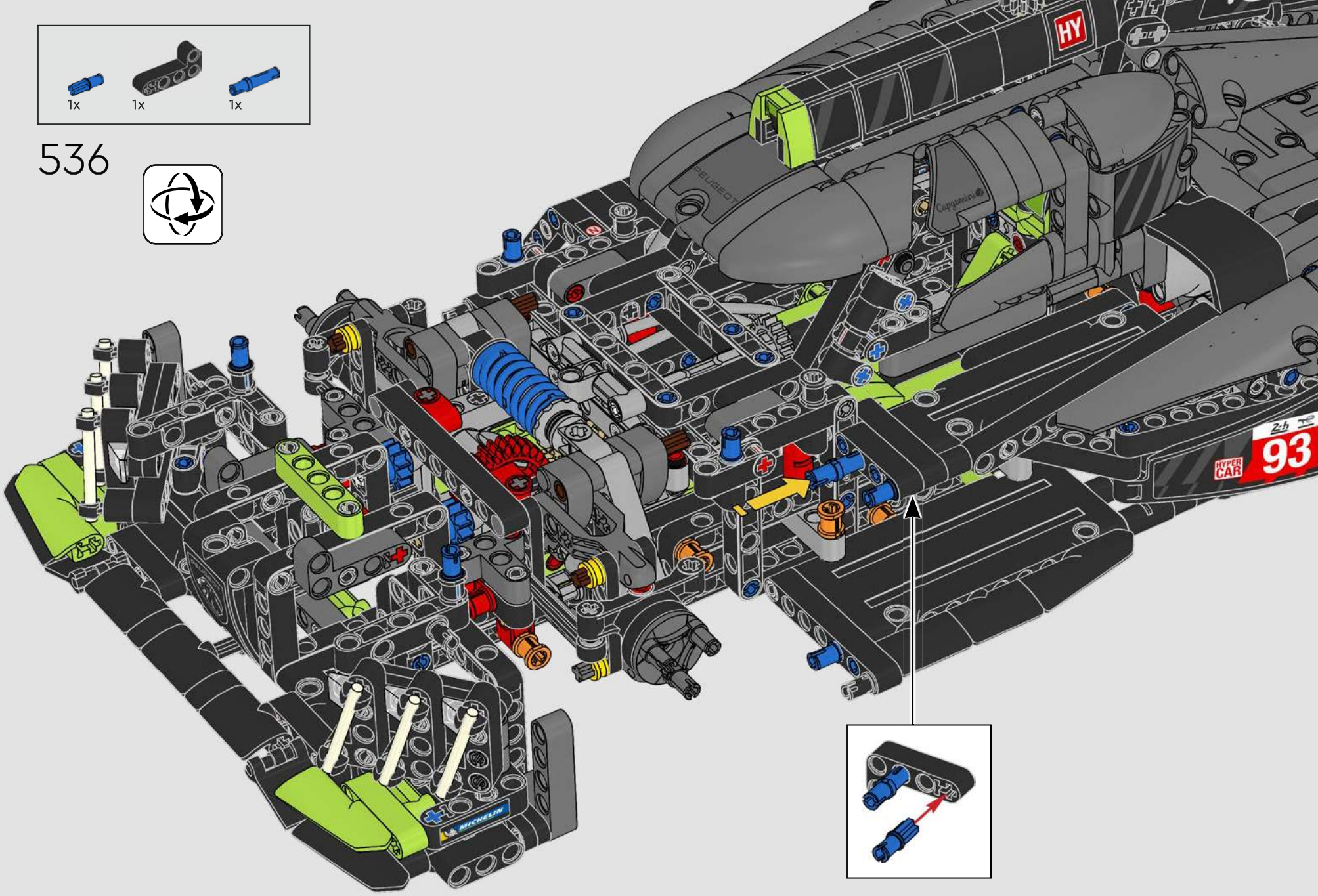

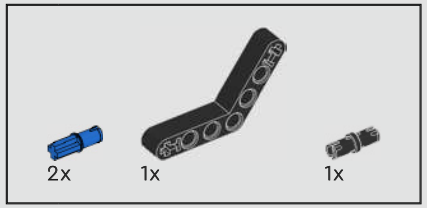

537

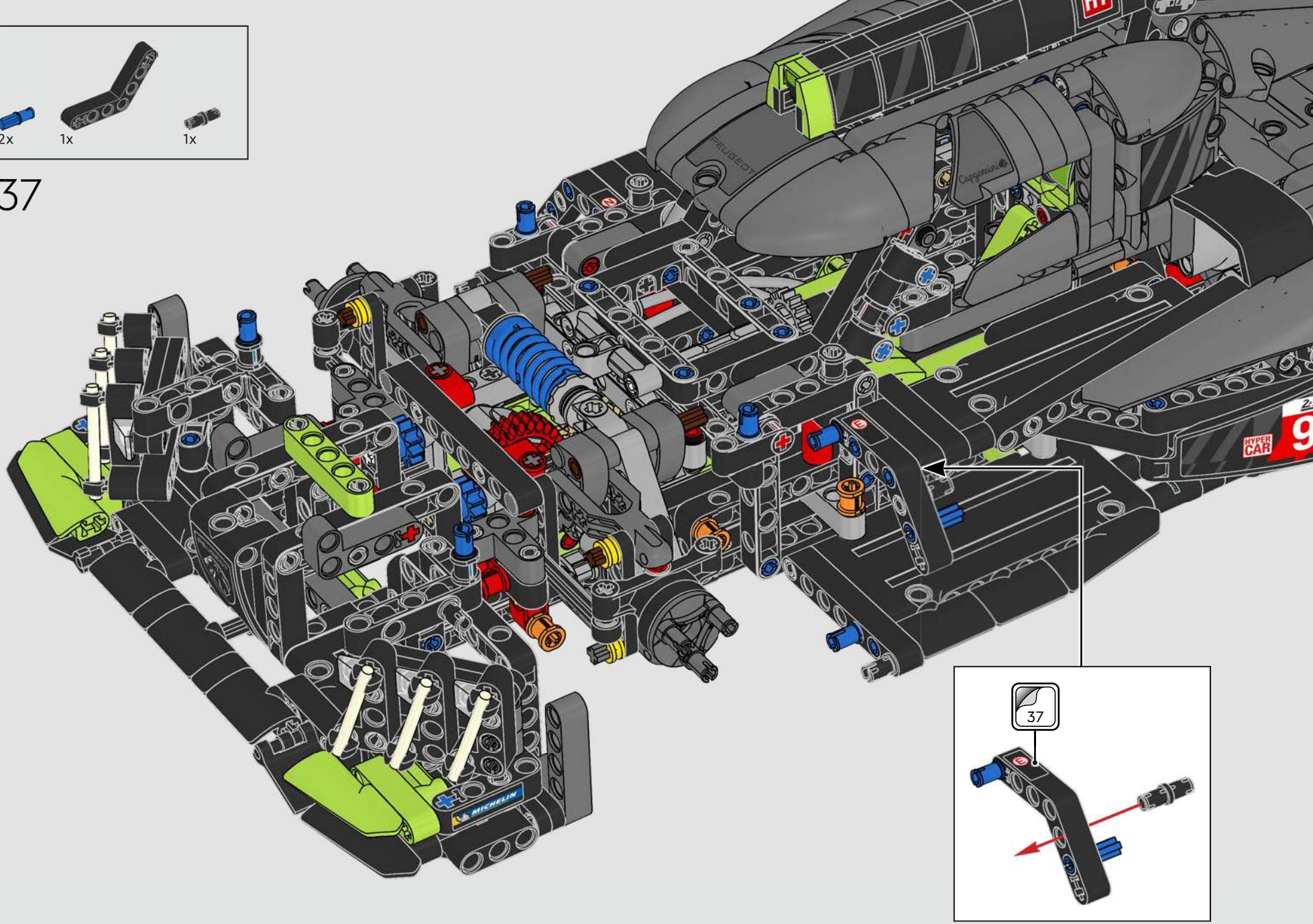

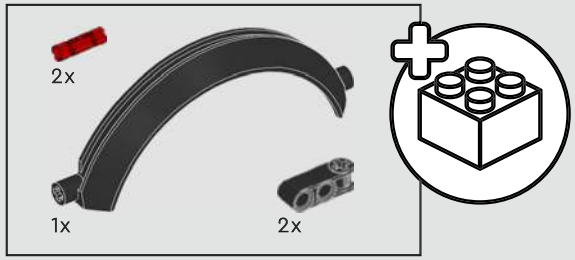

538

1

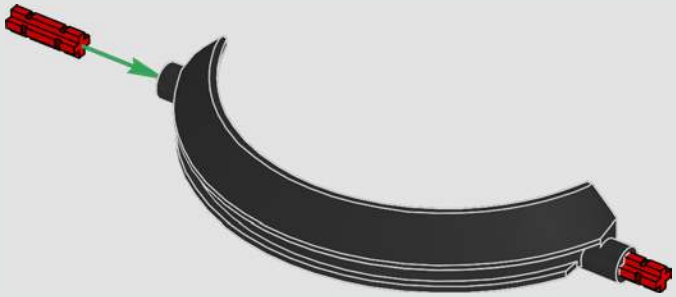

2

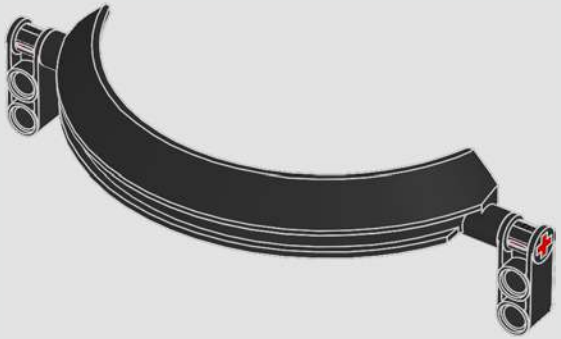

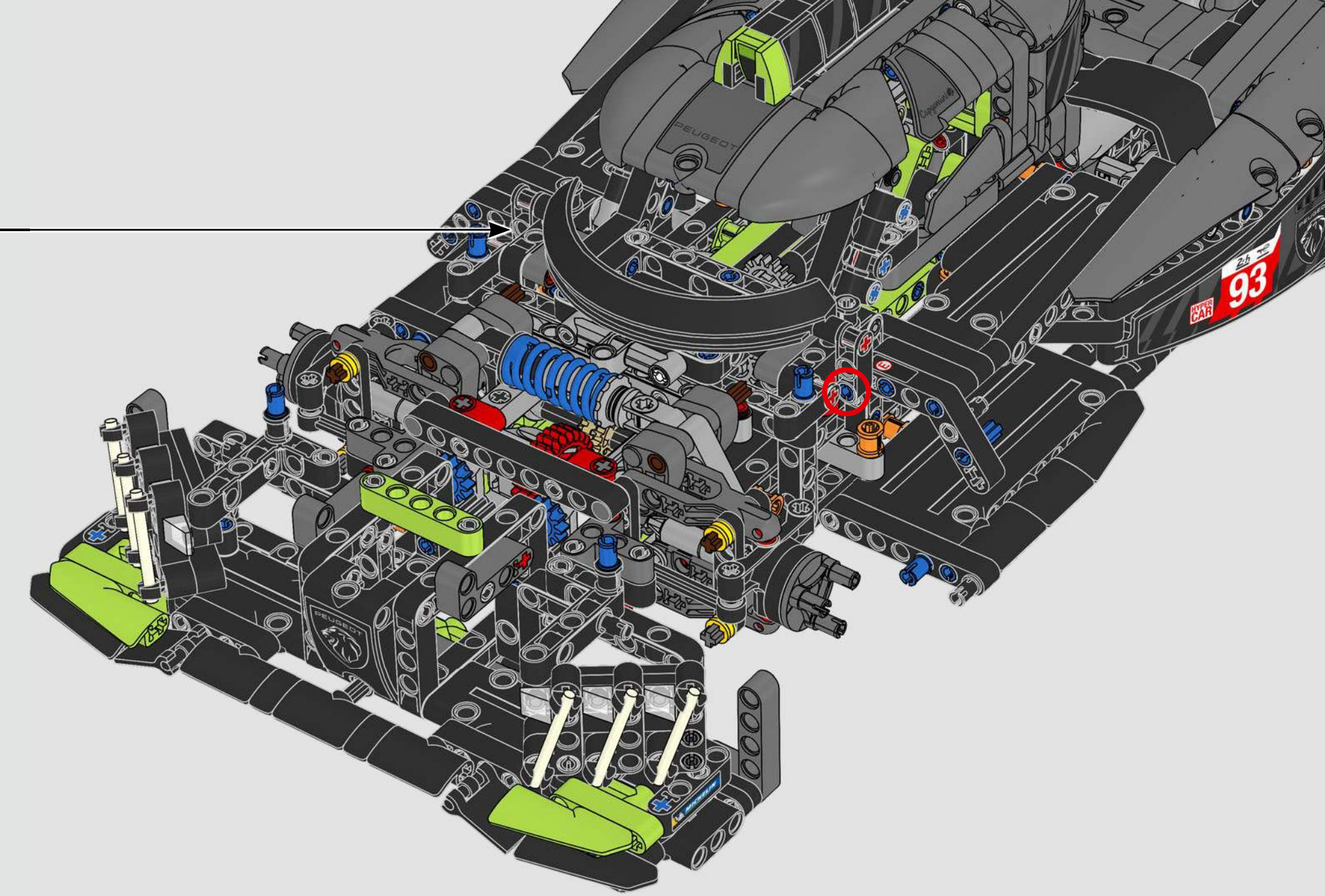
PEUGEOT
93
HYPER CAR

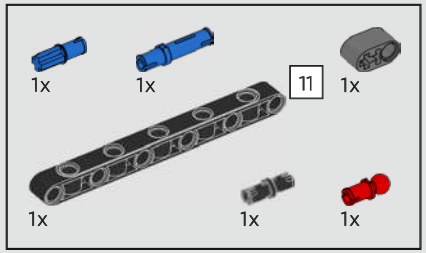

539

1

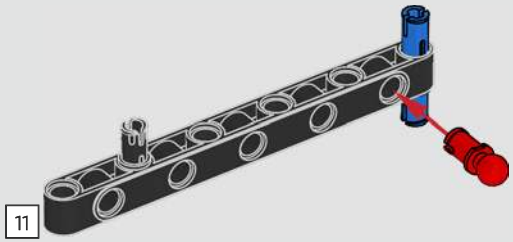

2

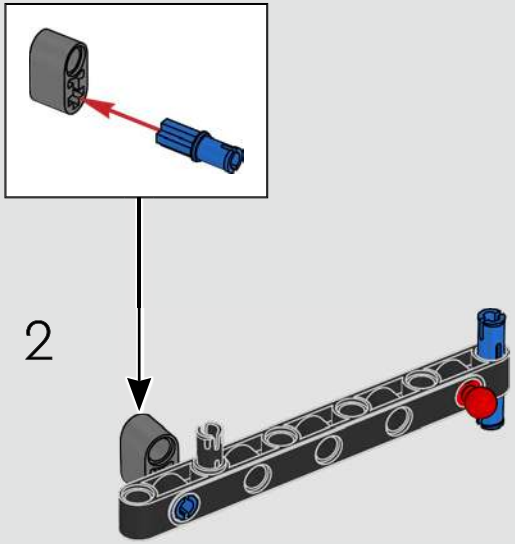

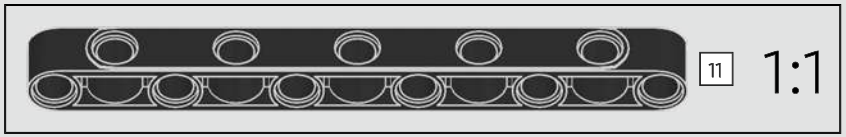

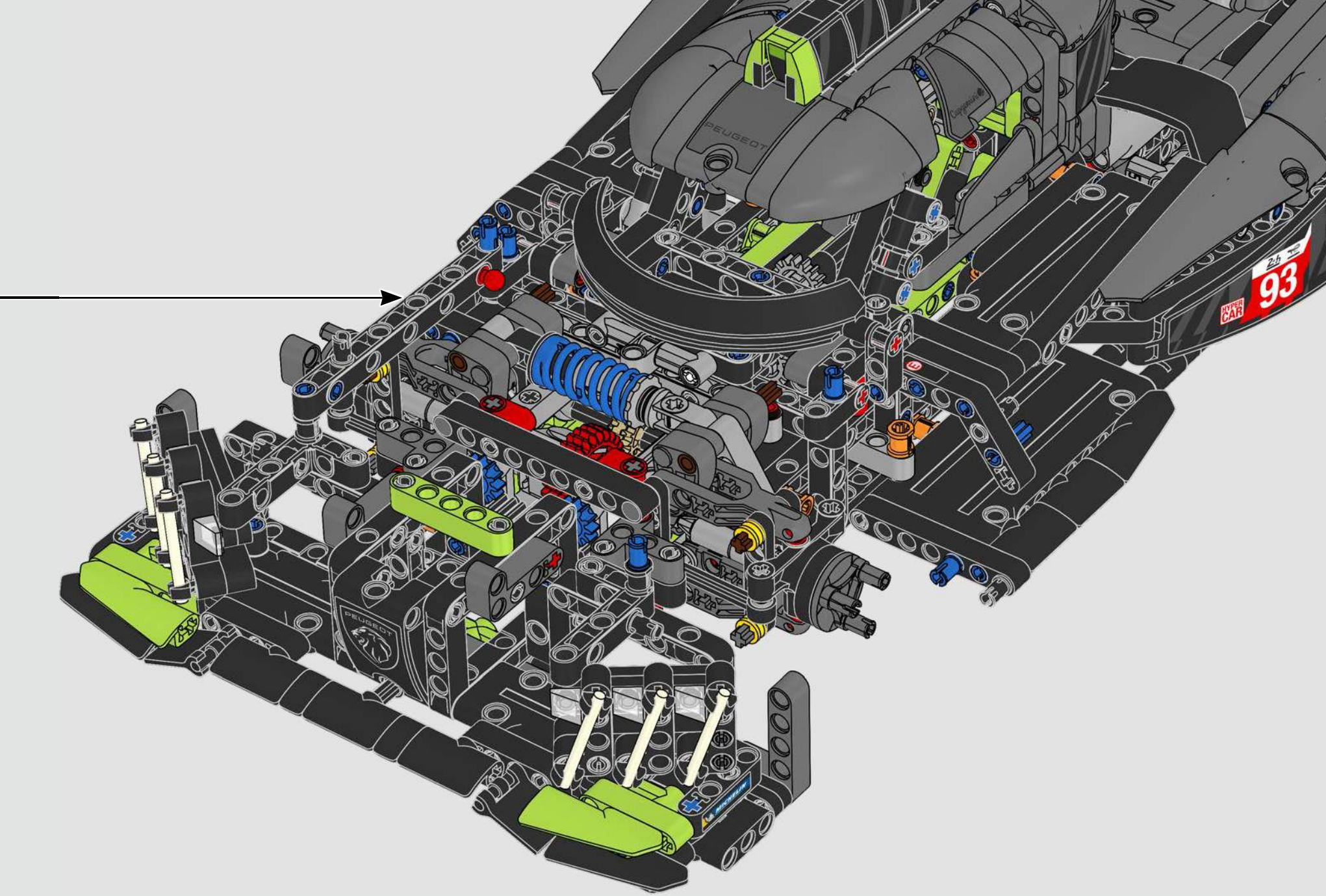
PEUGEOT
93
HYPER CAR
MICHELIN

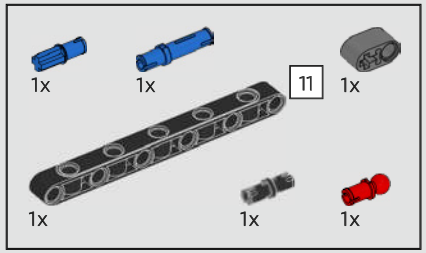

540

1

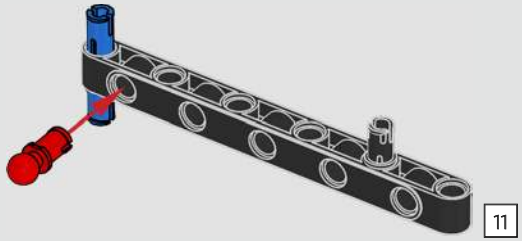

2

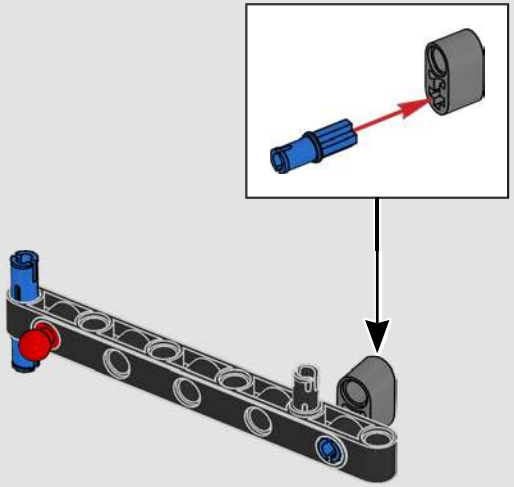

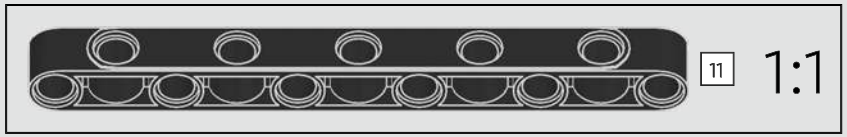

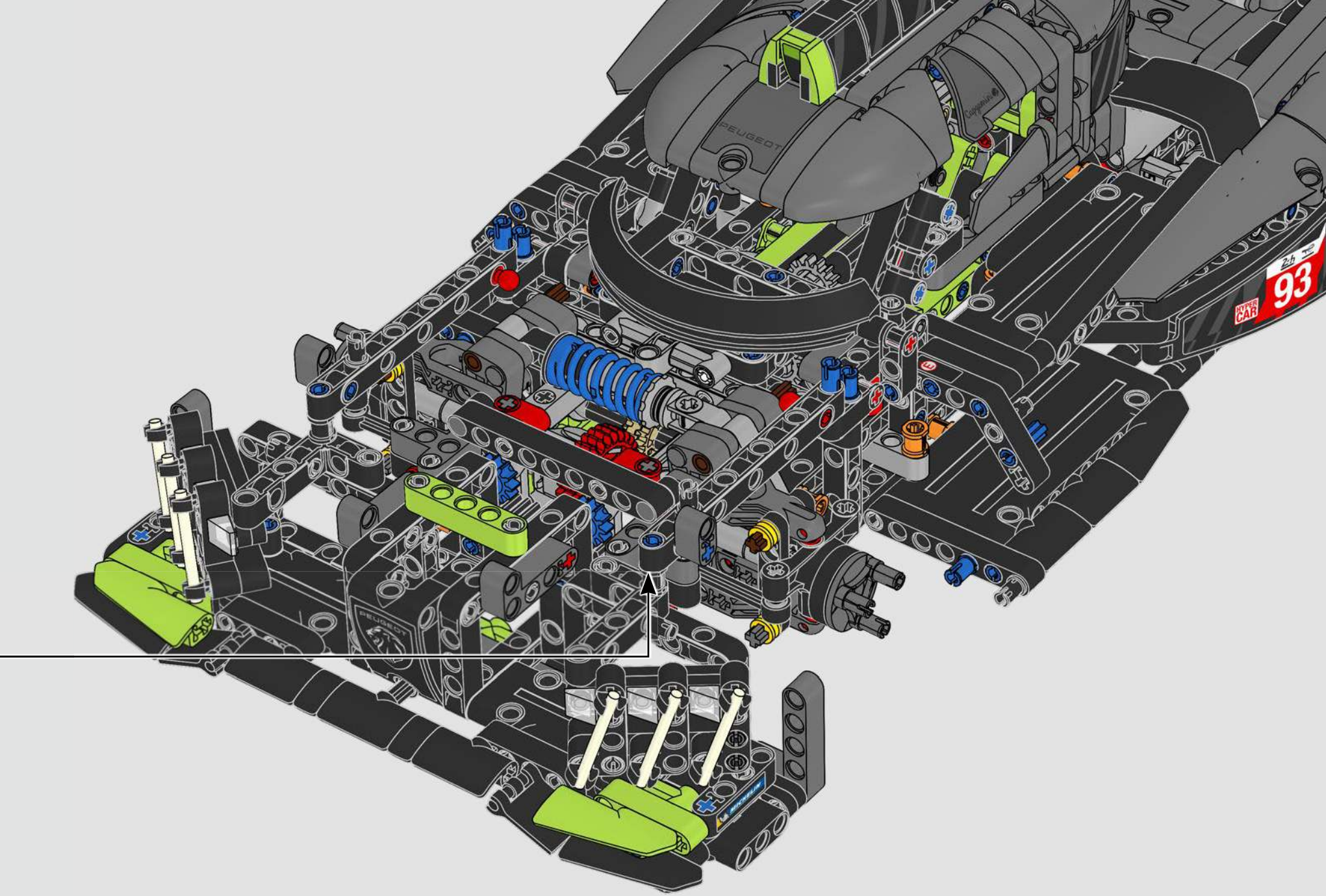
PEUGEOT
93
HYPER CAR

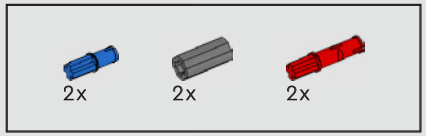

541

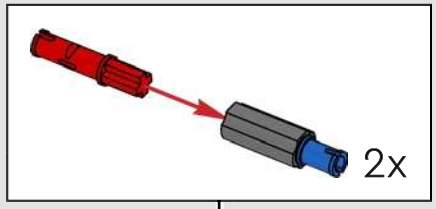

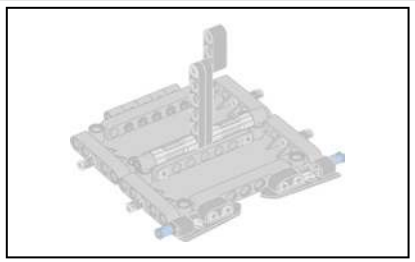

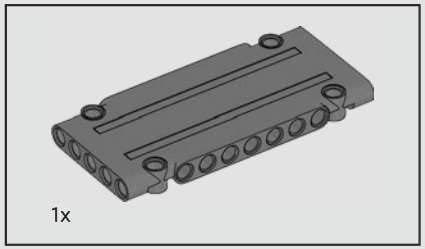
1x

542

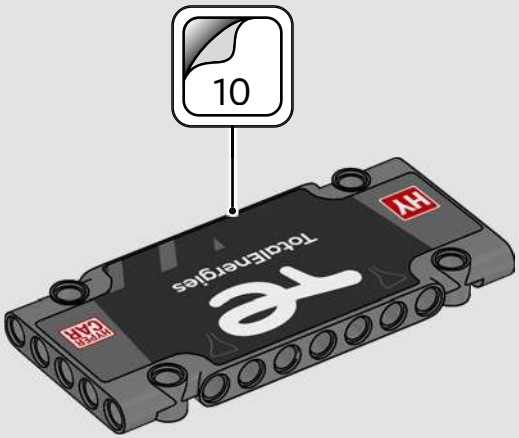
10
TotalEnergies
HY

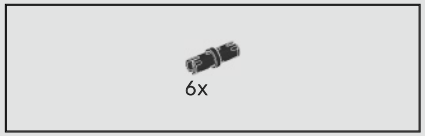
6x

543

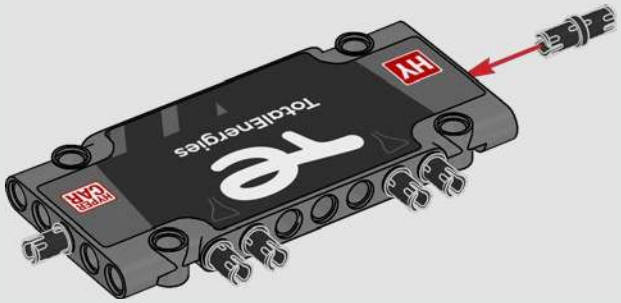
TotalEnergies
HY

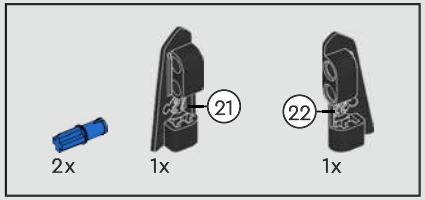
2x
21
1x
22
1x

544

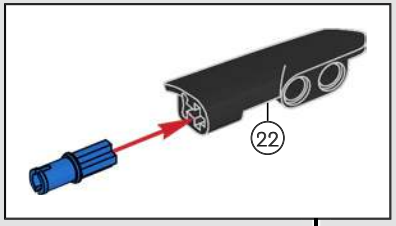
22

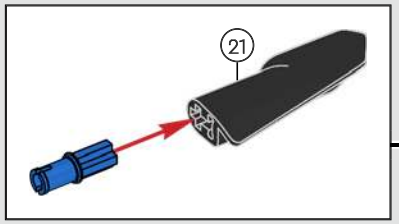
21

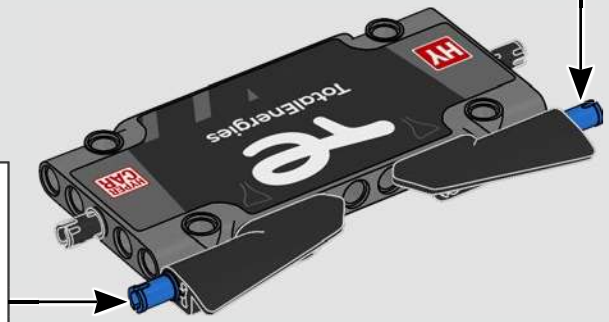
TotalEnergies
HY

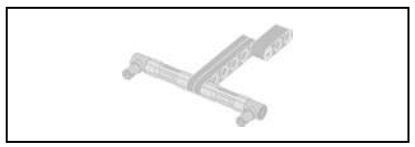

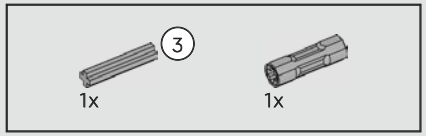

545

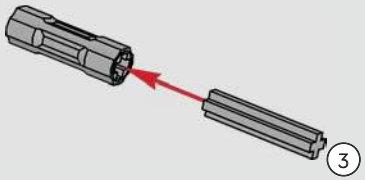

546

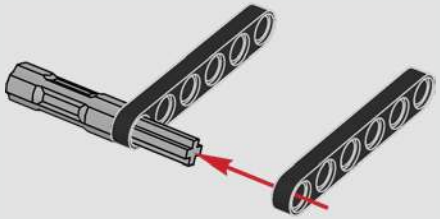

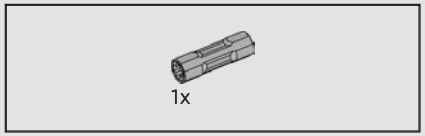

547

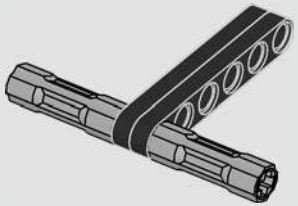

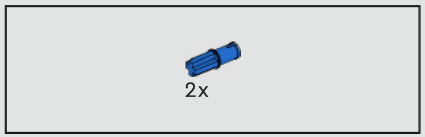

548

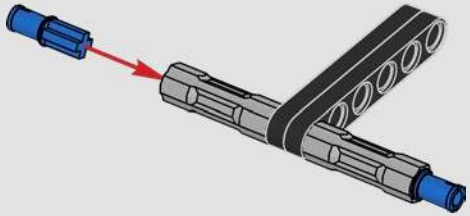

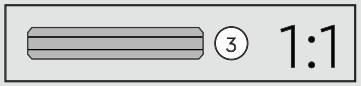

549

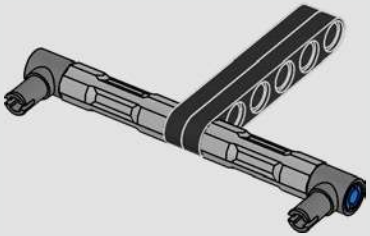

550

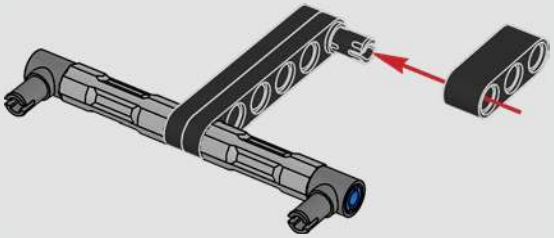

551

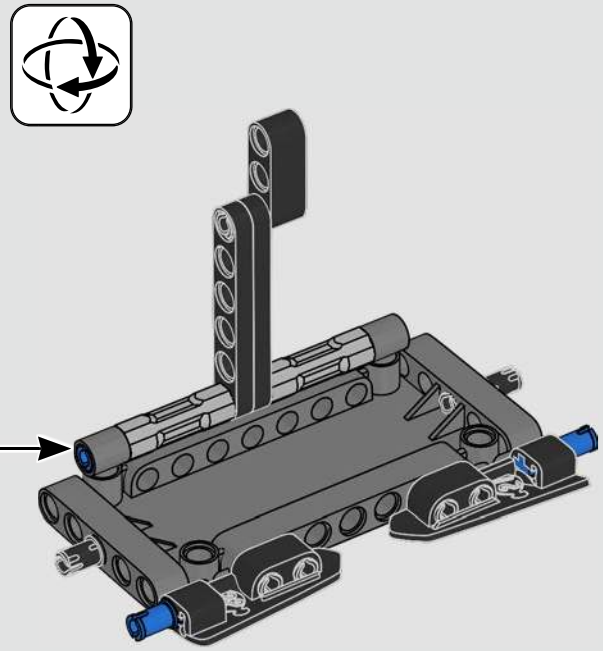

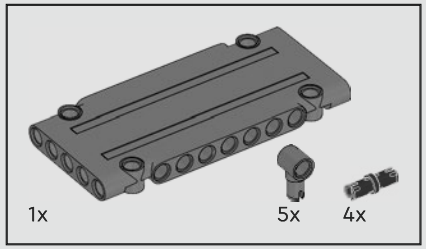

552

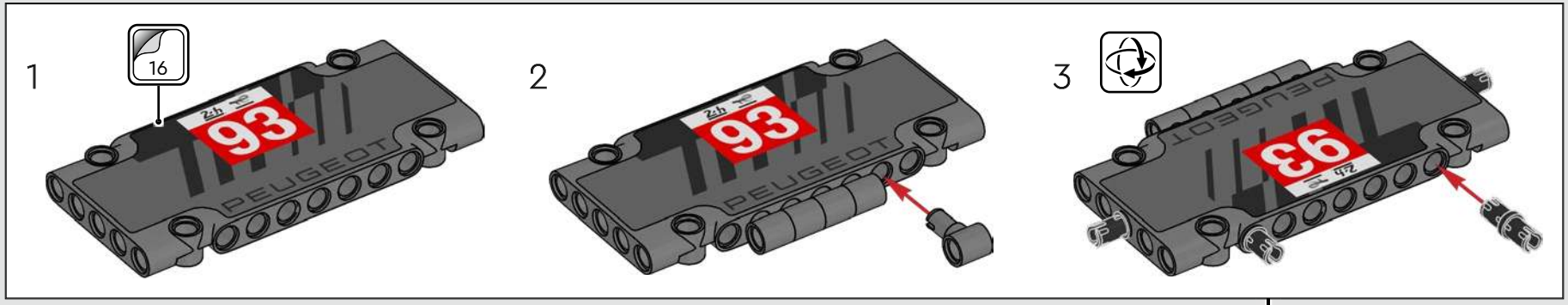

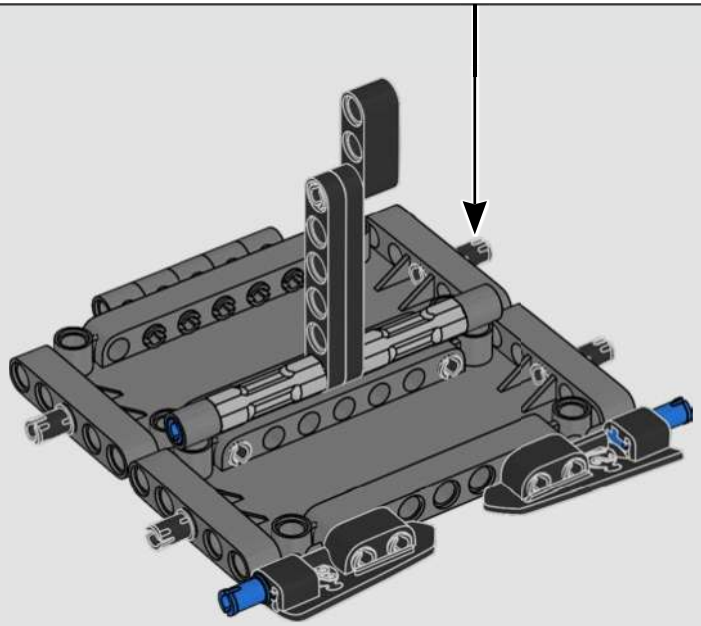

553

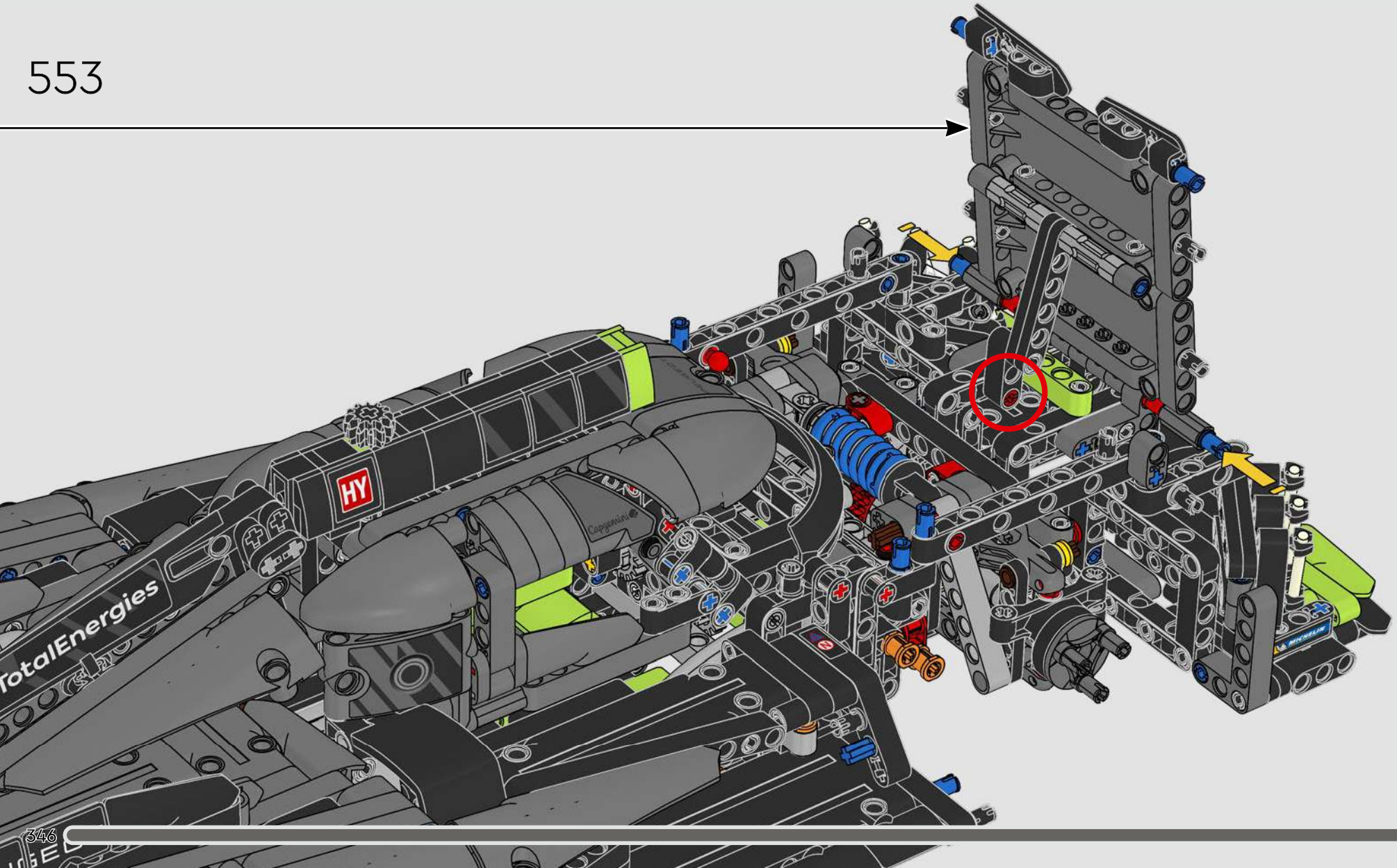

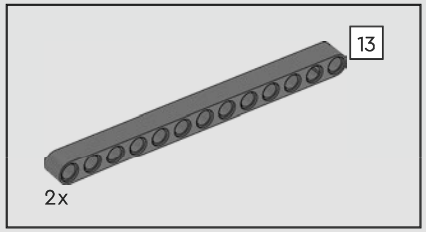

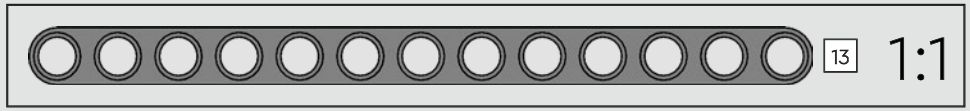

554

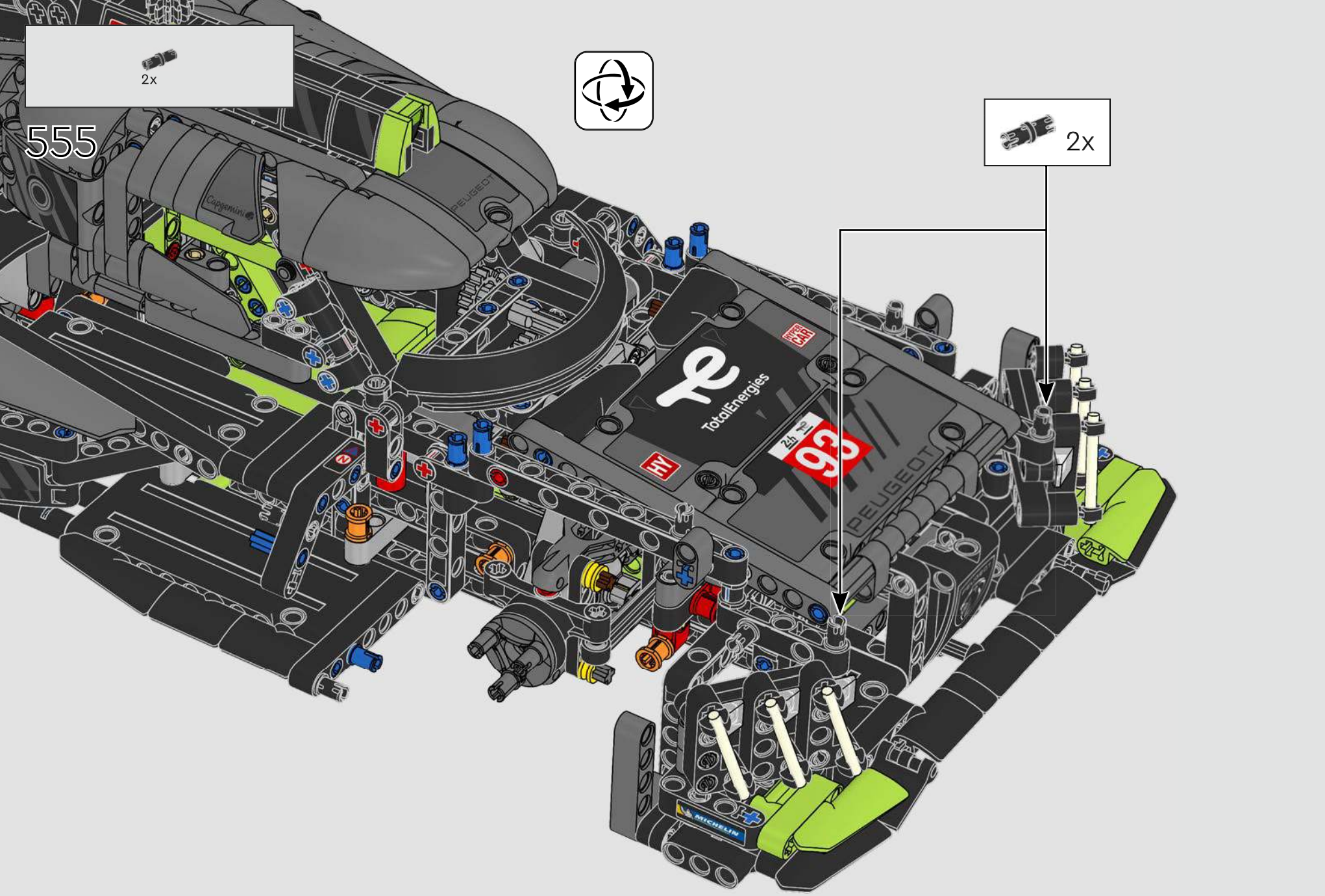
2x
555
2x
TotalEnergies
PEUGEOT
MICHELIN

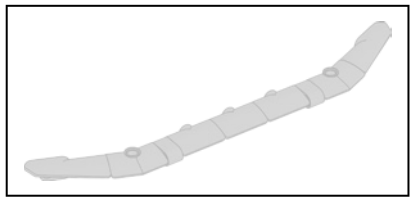

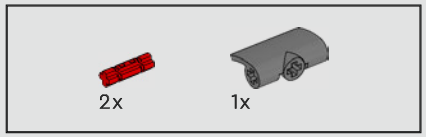

556

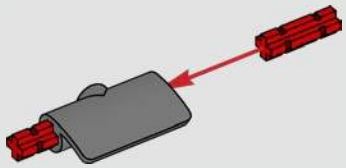

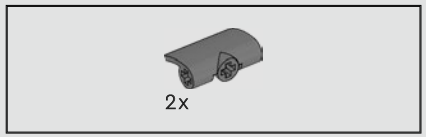

557

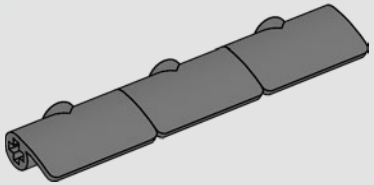

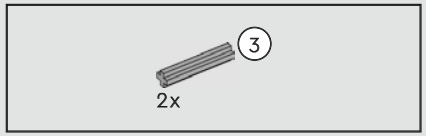

558

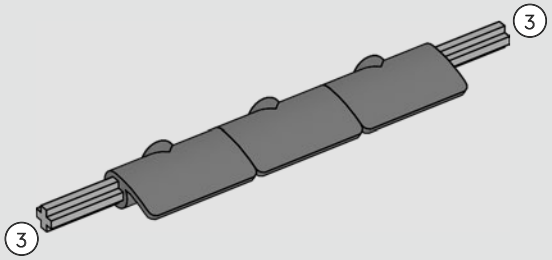

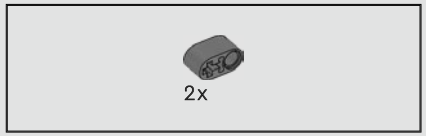

559

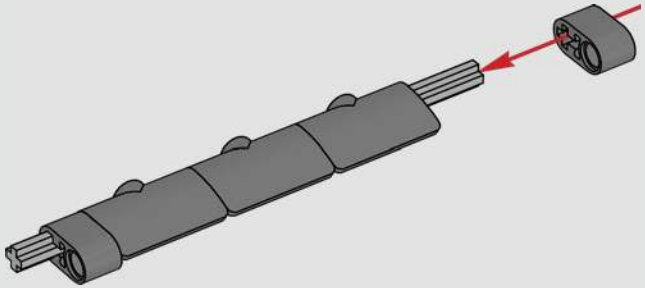

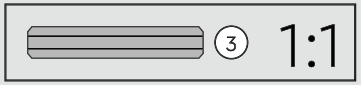

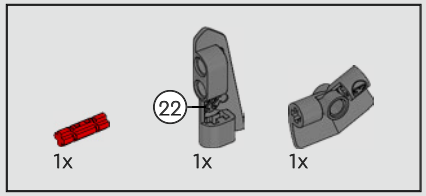

560

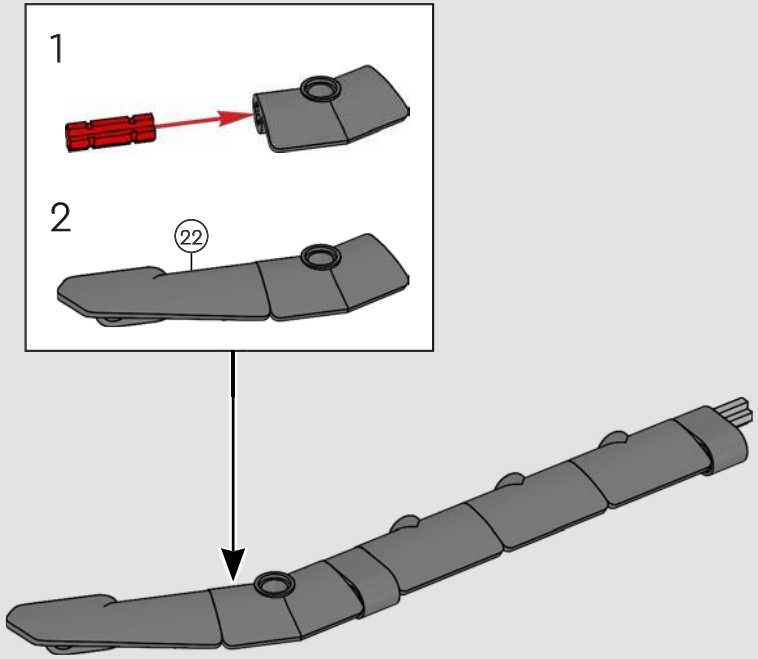

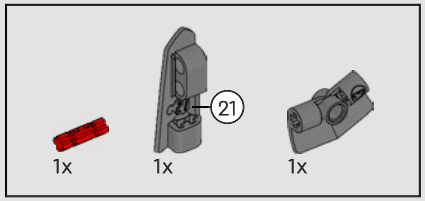

561

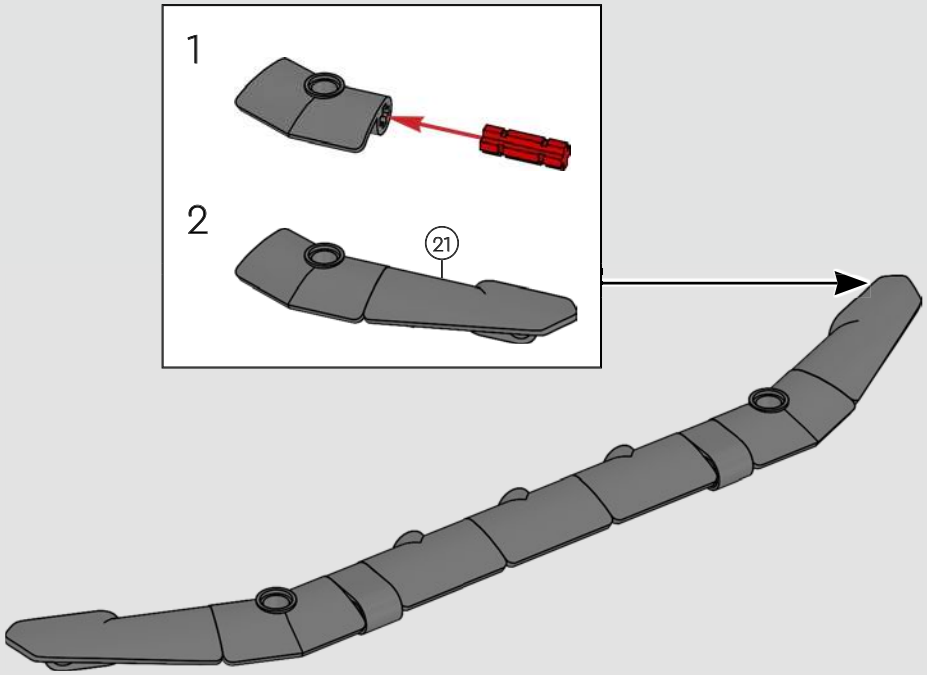

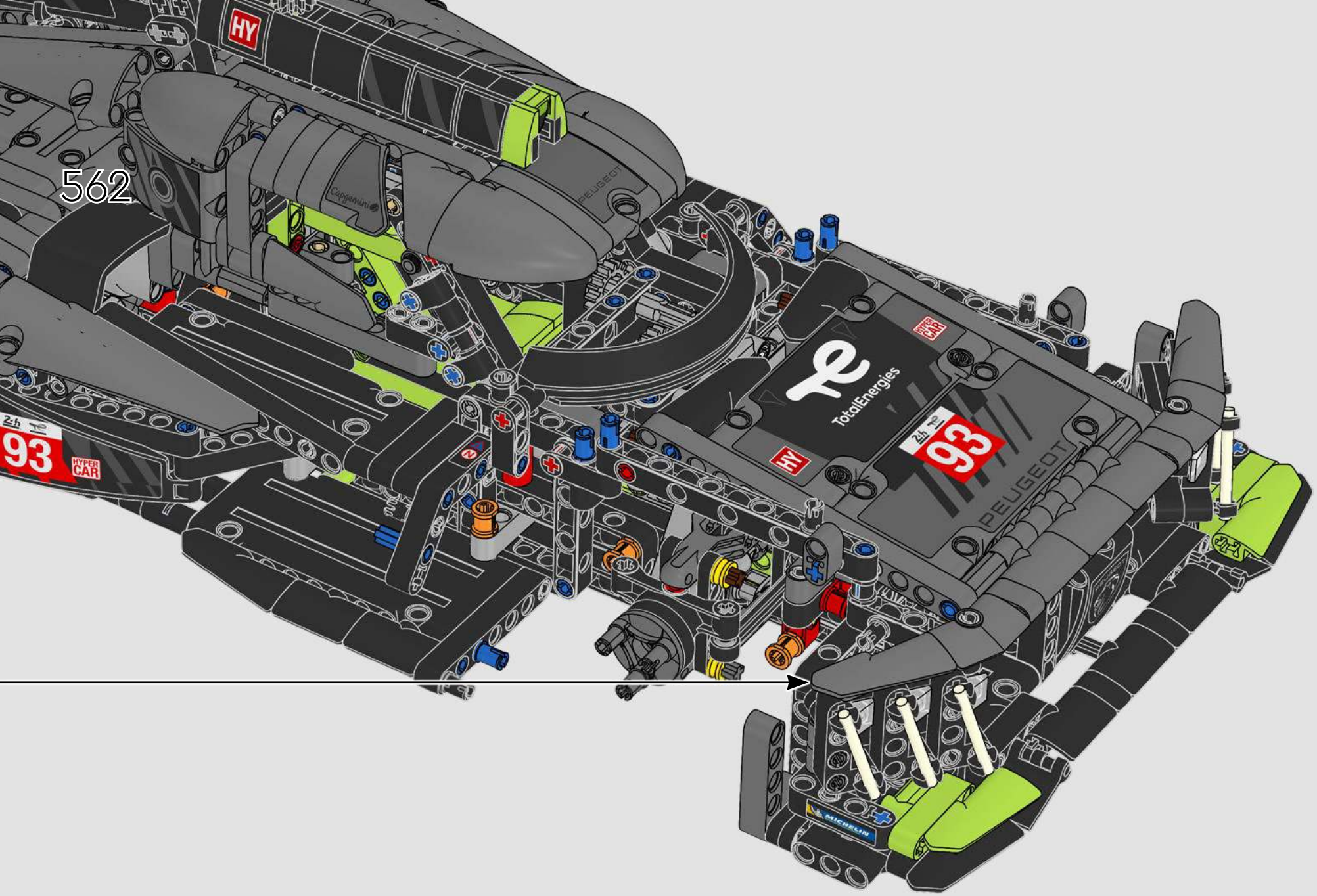
562
HY
93
HYPER CAR
TotalEnergies
PEUGEOT
MICHELIN

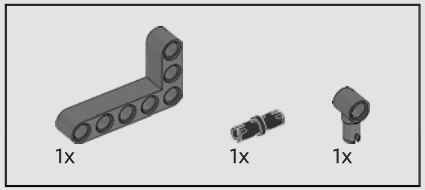

563

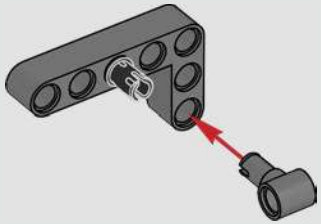

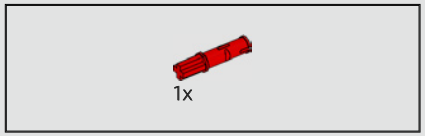

564

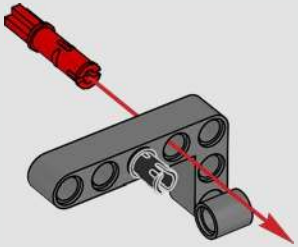

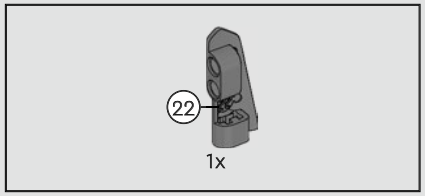

565

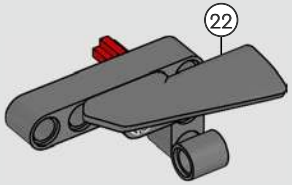

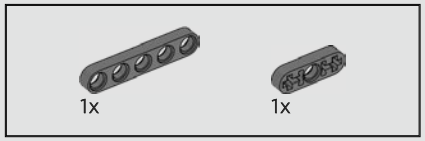

566

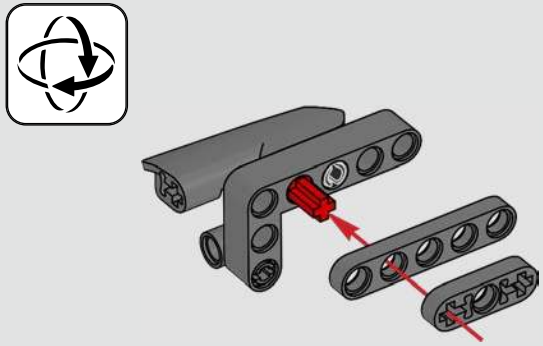

567

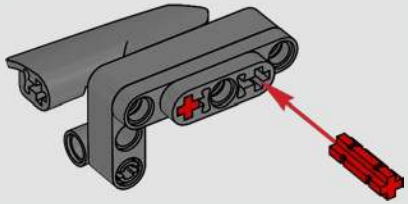

568

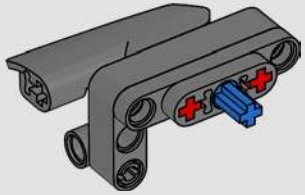

569

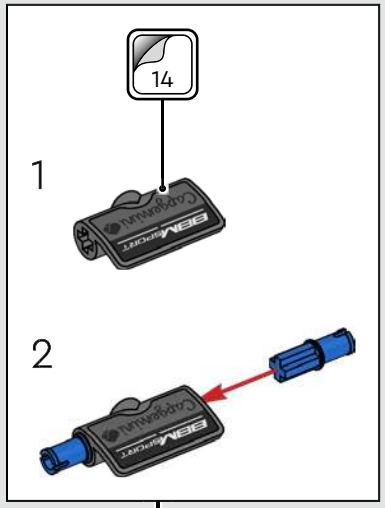

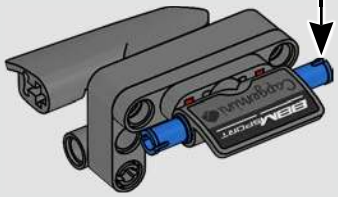

570

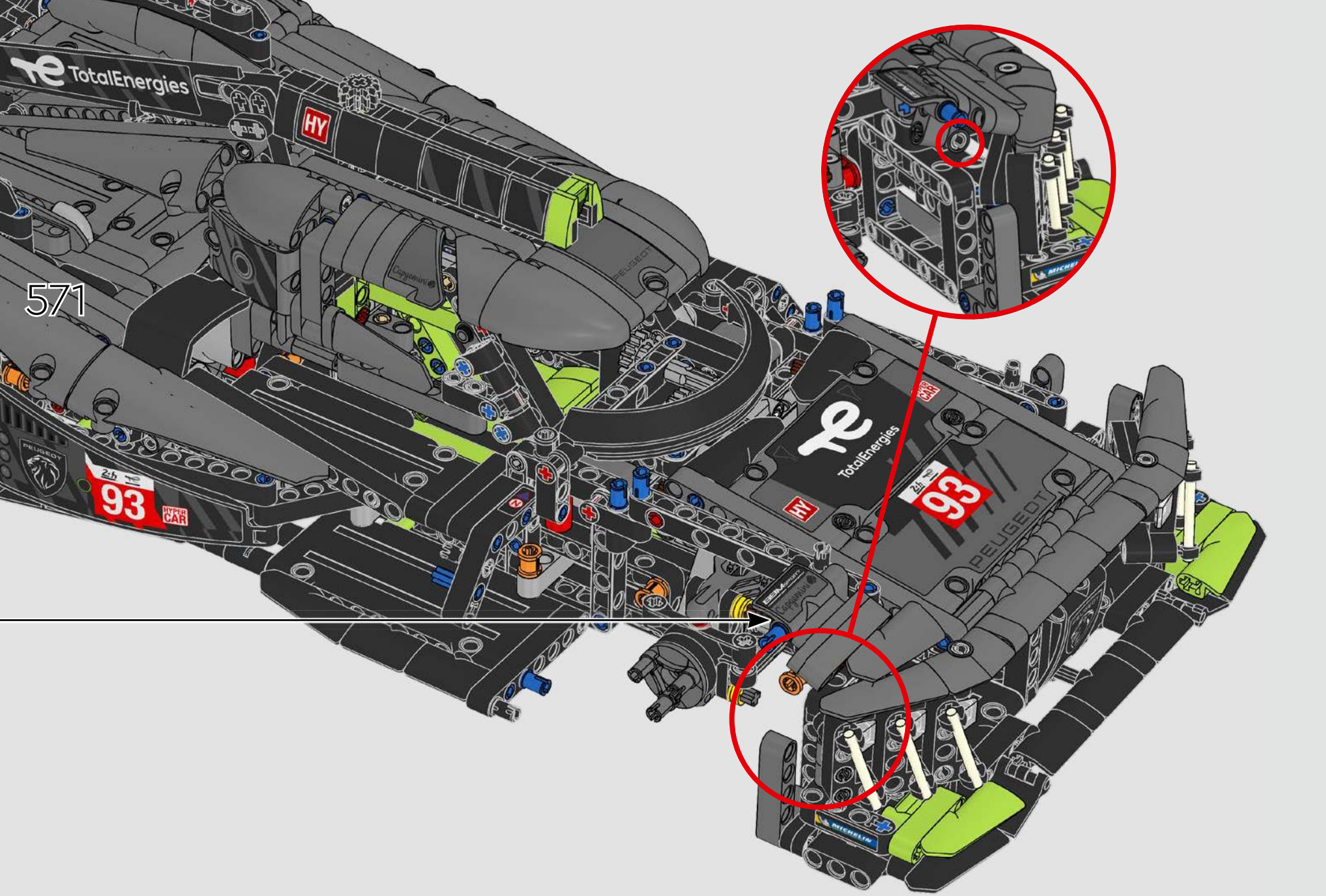
571
TotalEnergies
HY
93
PEUGEOT
HYPER CAR
MICHELIN

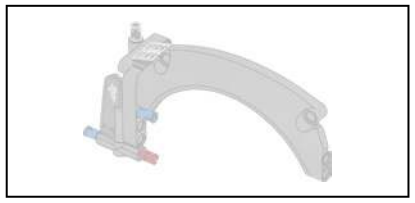

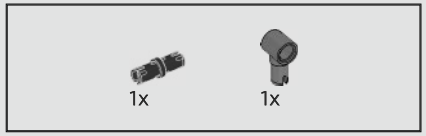

572

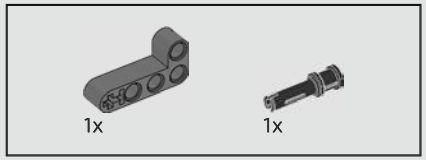

573

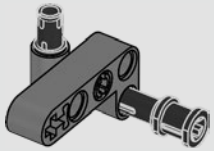

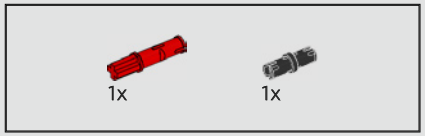

574

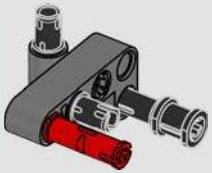

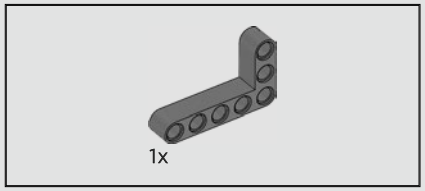

575

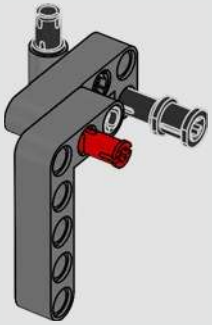

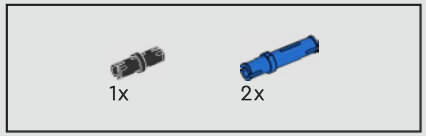

576

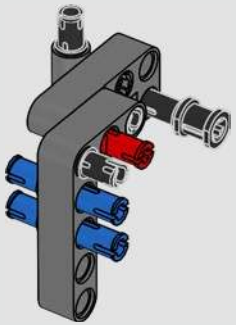

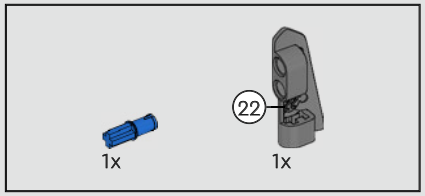

577

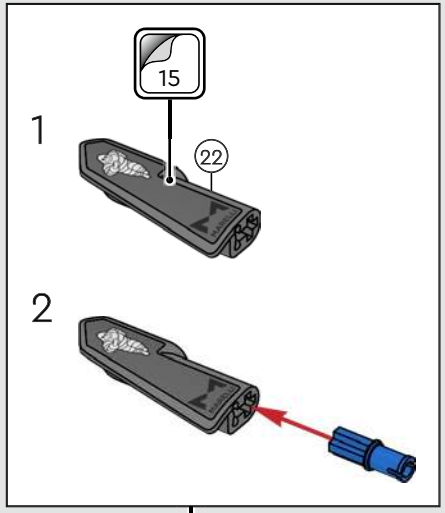

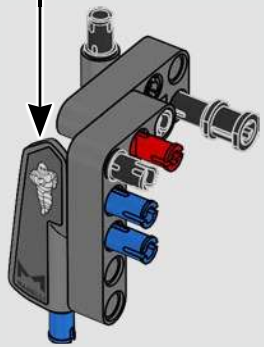

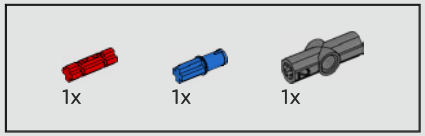

578

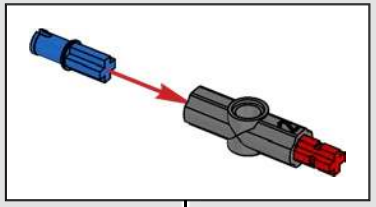

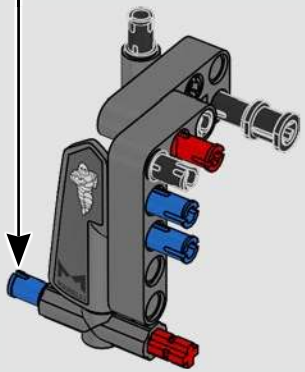

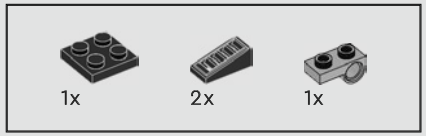

579

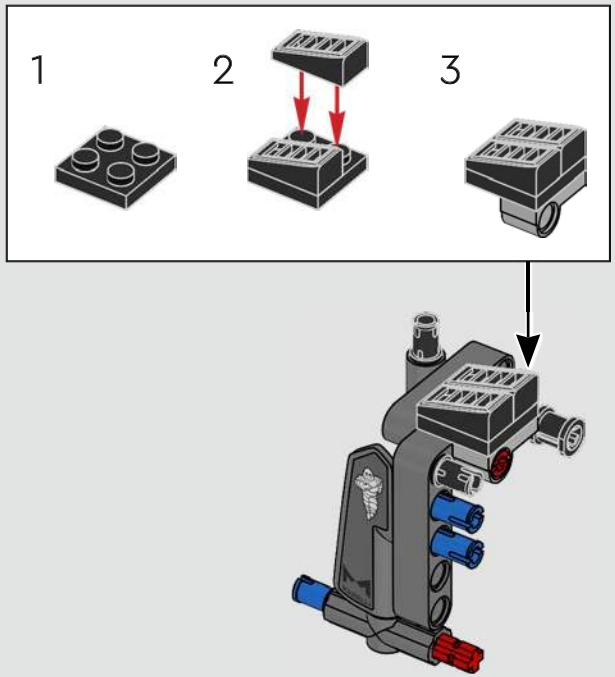

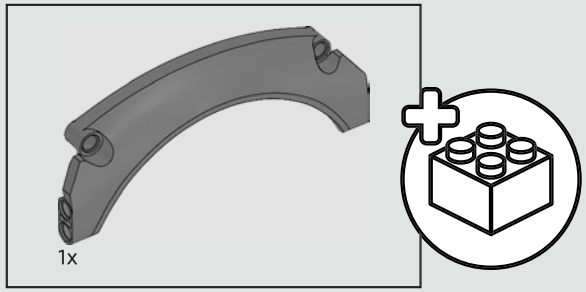

580

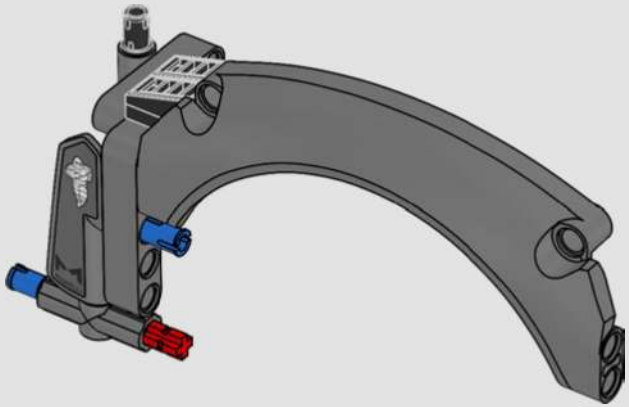

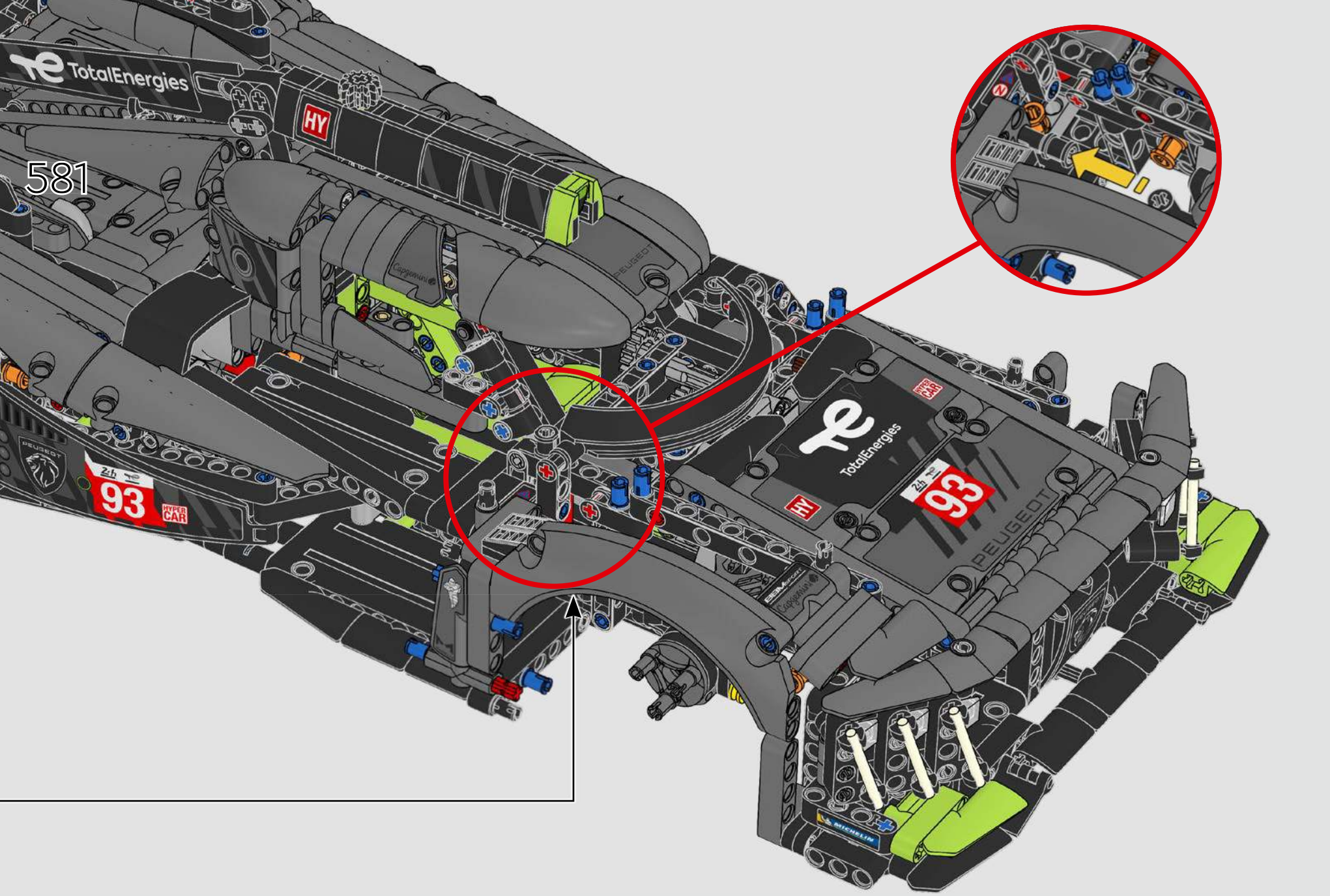
581
TotalEnergies
HY
93
HYPER CAR
PEUGEOT
Capgemini
MICHELIN

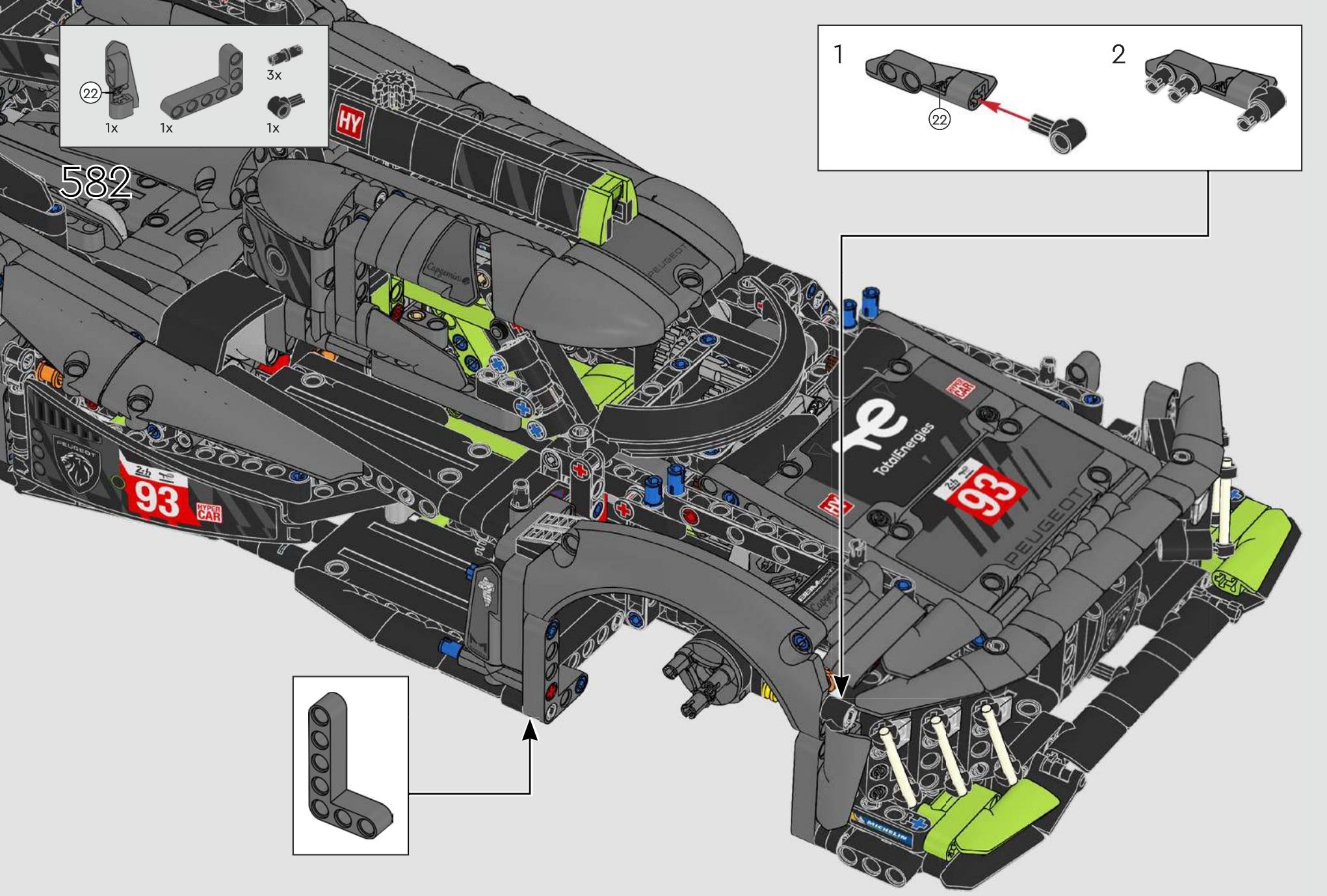
582
22
1x
1x
3x
1x
1
22
2
HY
93
HYPER CAR
PEUGEOT
TotalEnergies
MICHELIN

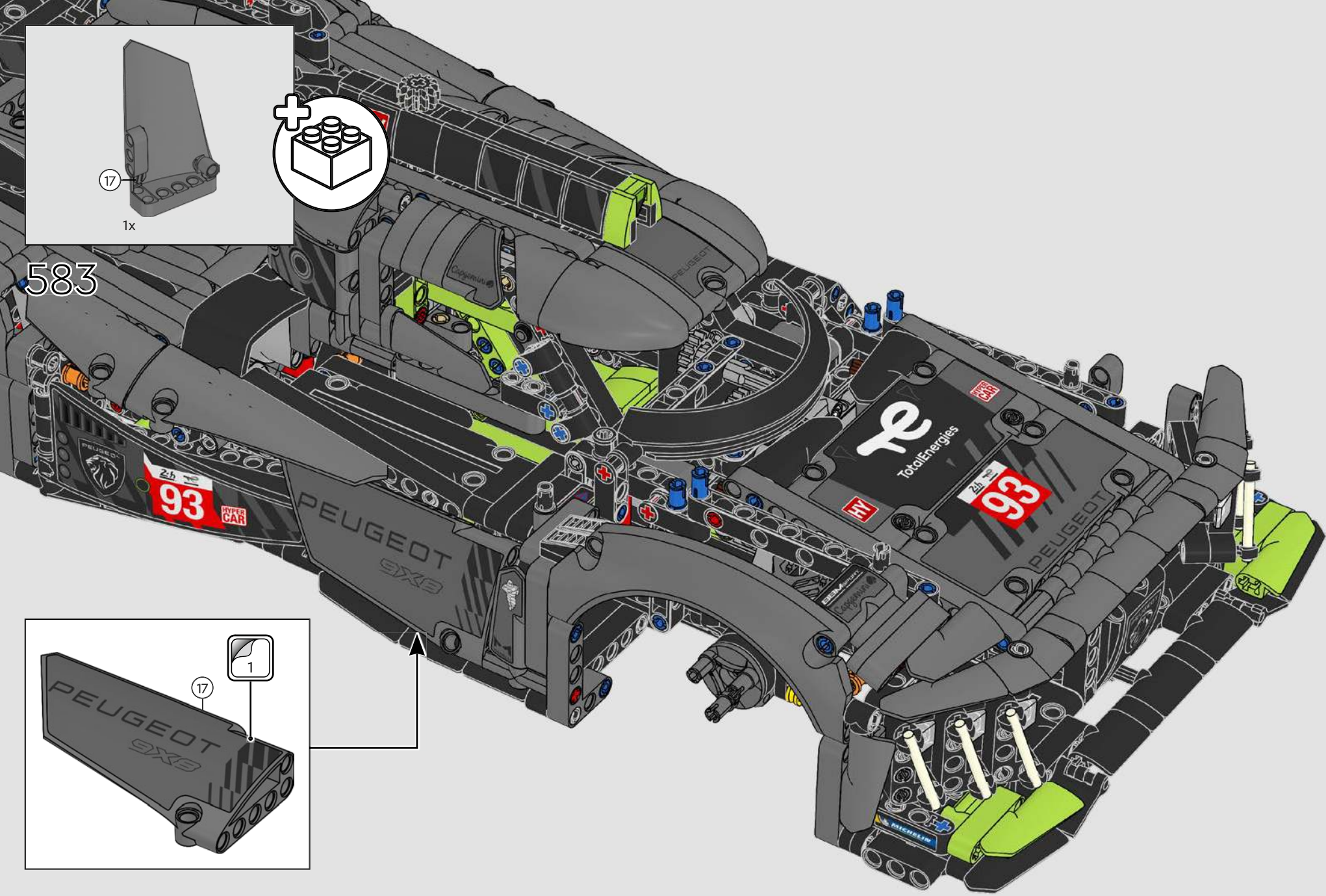
583
17
1x
1
17
PEUGEOT
9X8
93
HYPER CAR
TotalEnergies
HY
MICHELIN

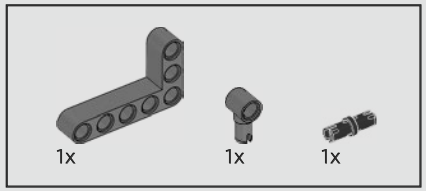

584

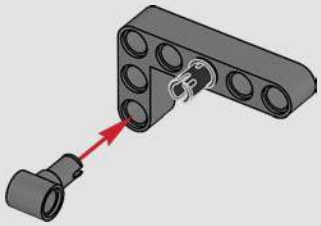

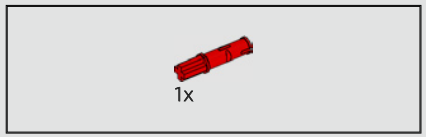

585

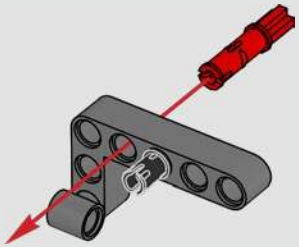

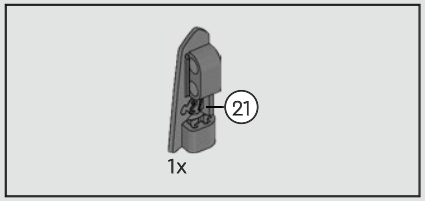

586

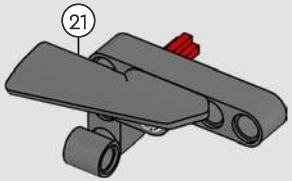

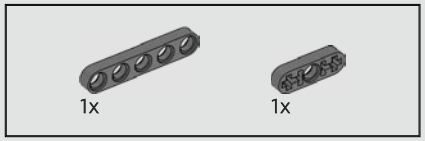

587

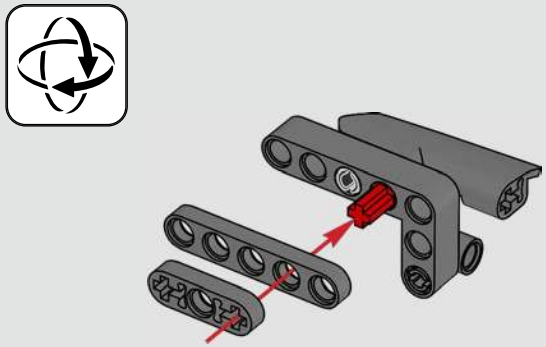

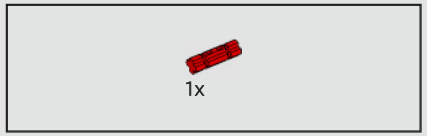

588

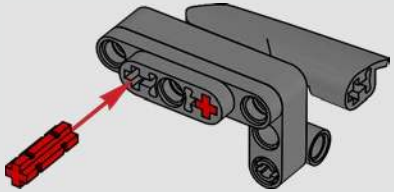

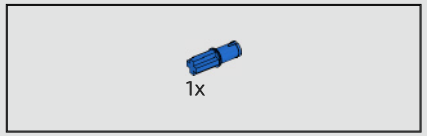

589

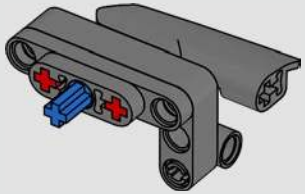

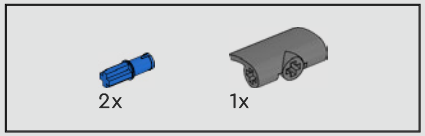

590

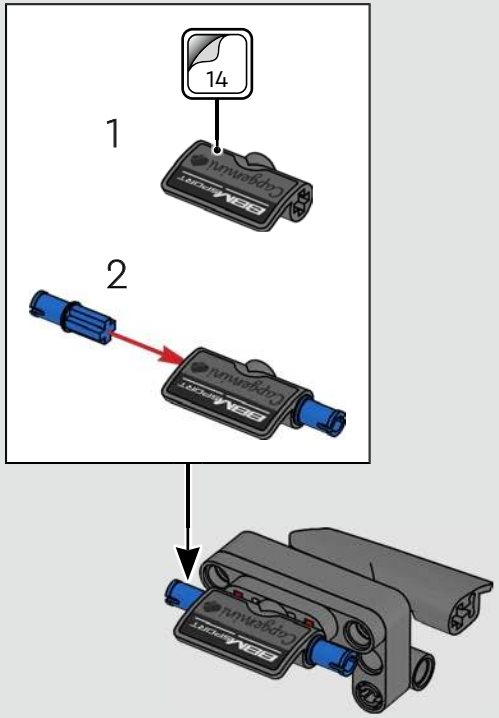

591

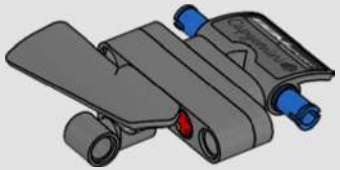

592

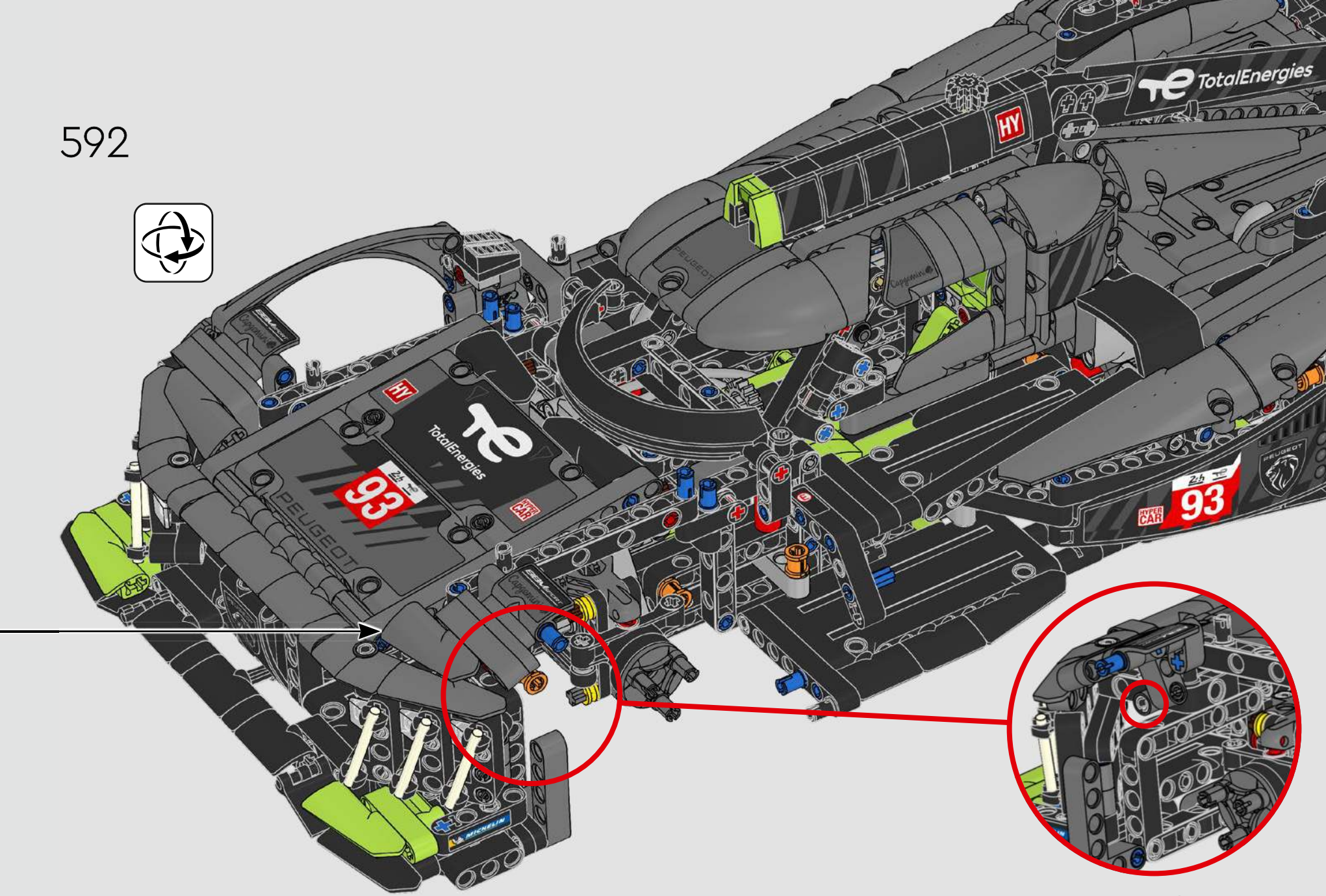

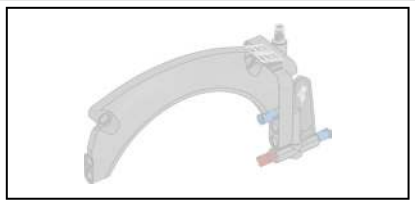

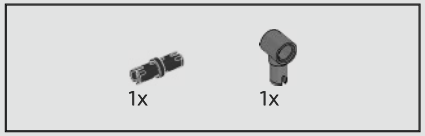

593

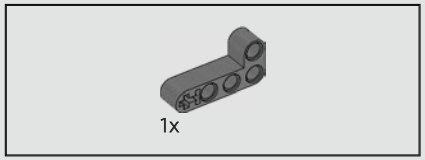

594

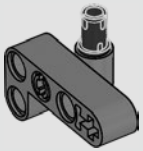

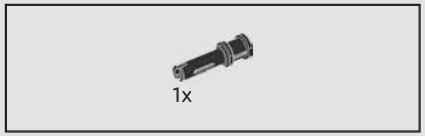

595

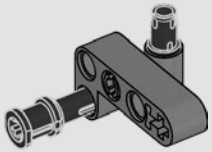

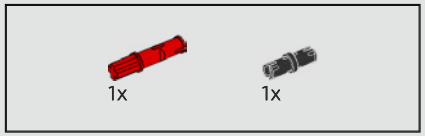

596

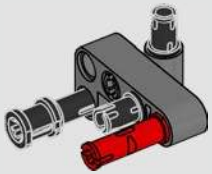

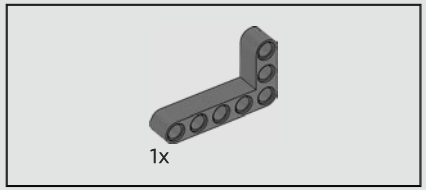

597

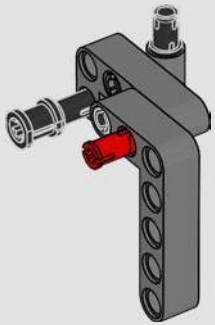

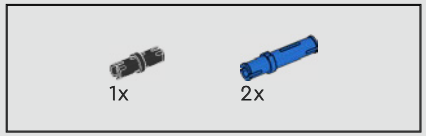

598

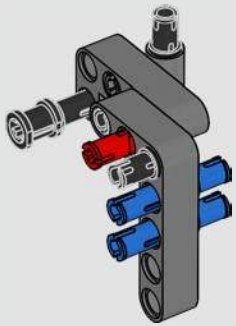

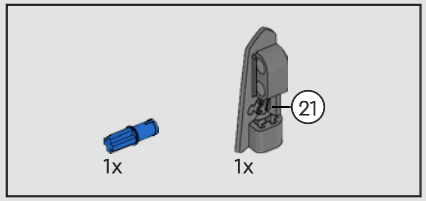

599

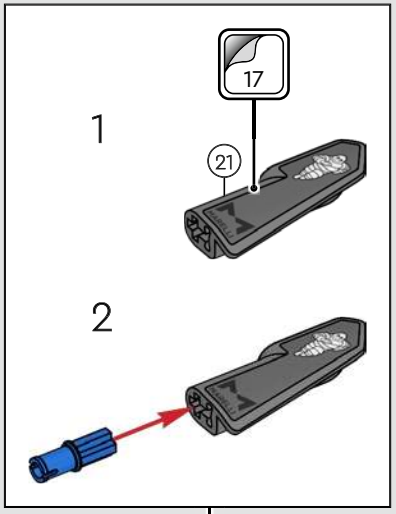

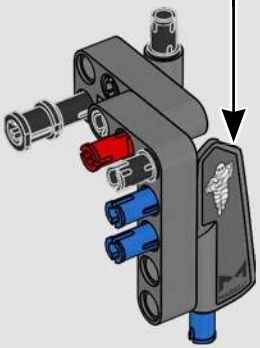

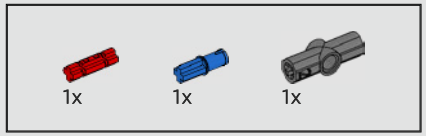

600

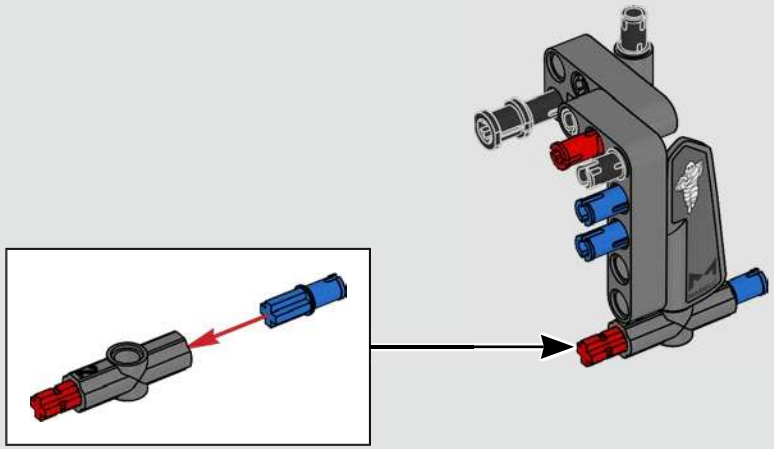

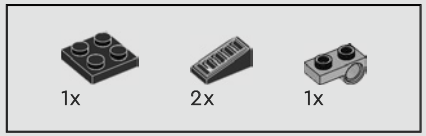

601

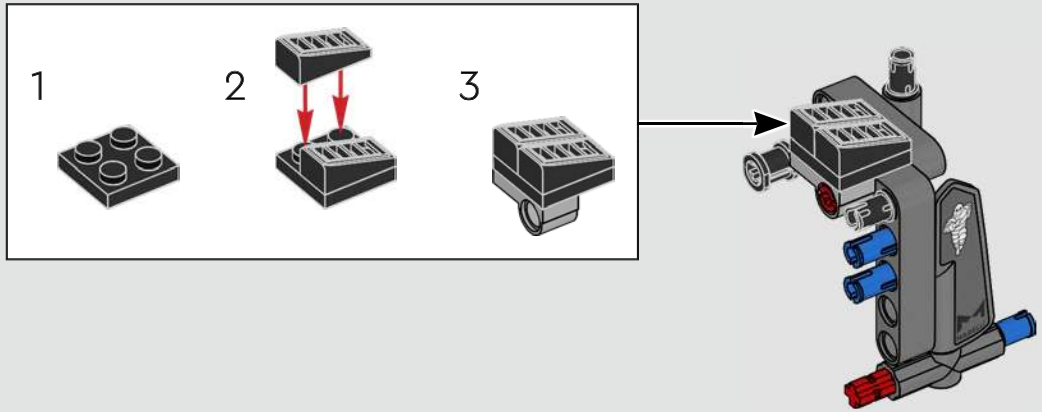

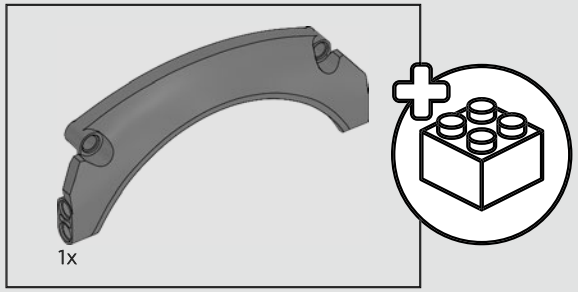

602

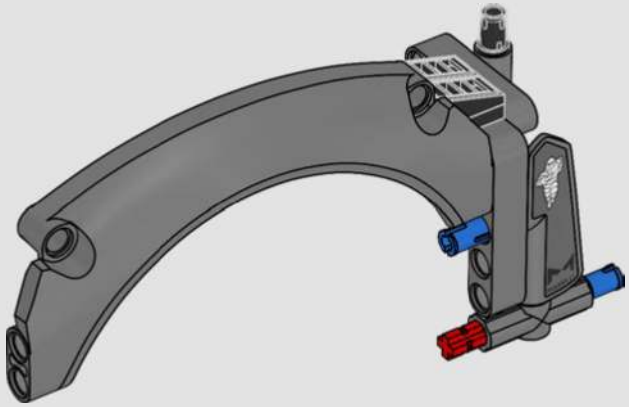

603

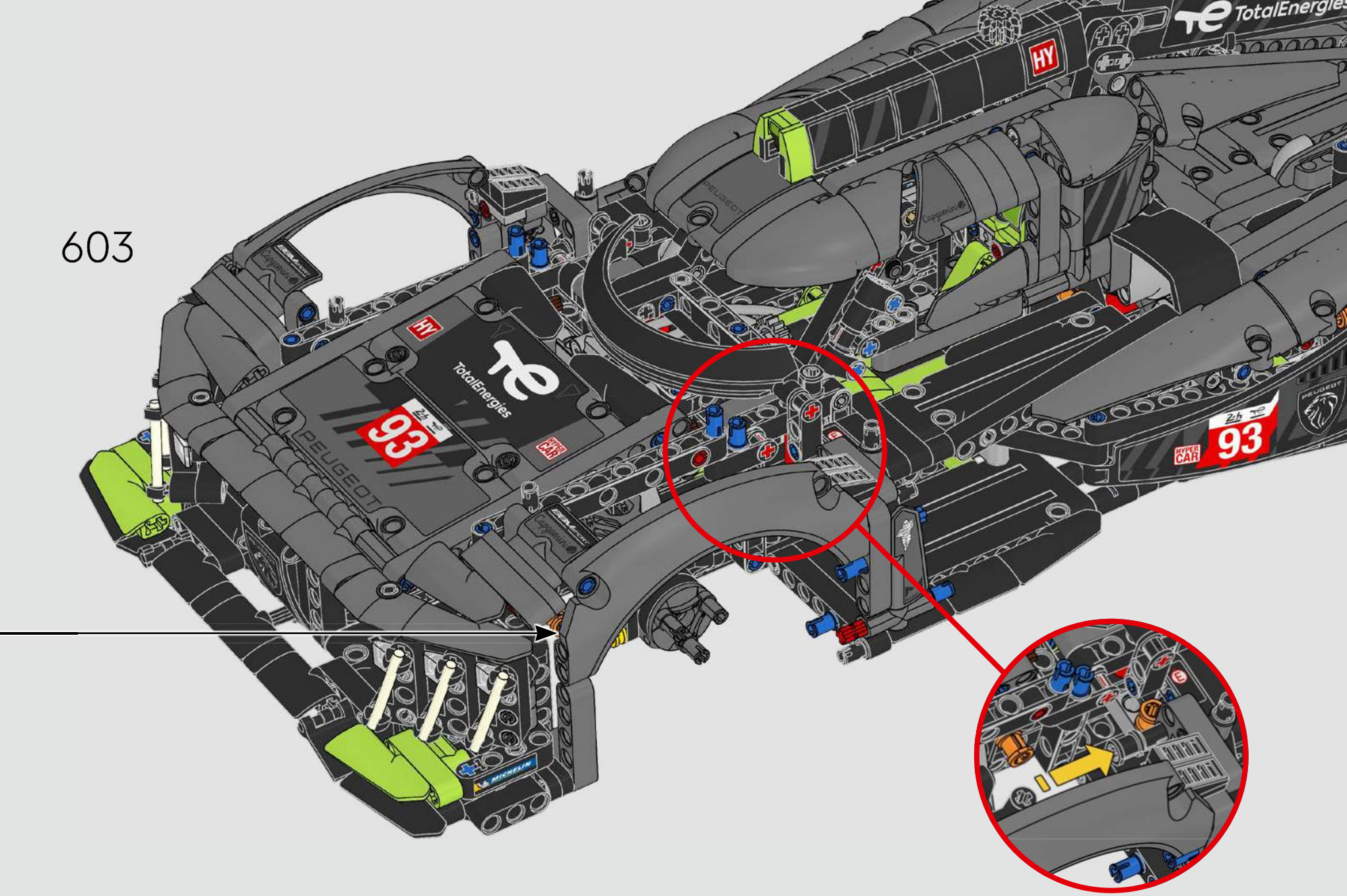

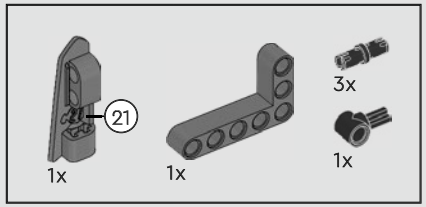

604

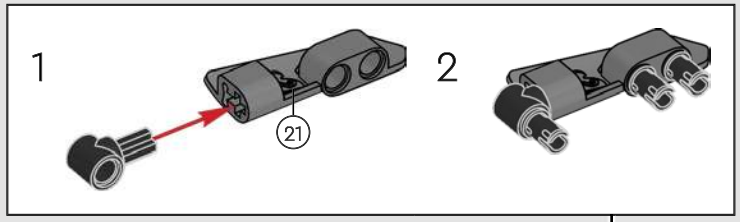

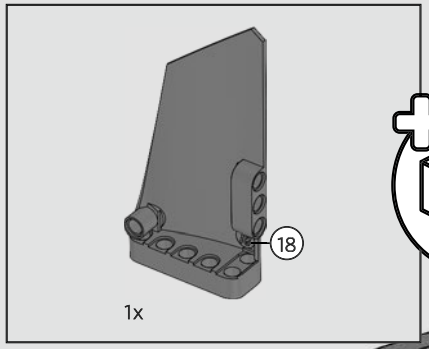

605

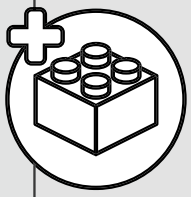

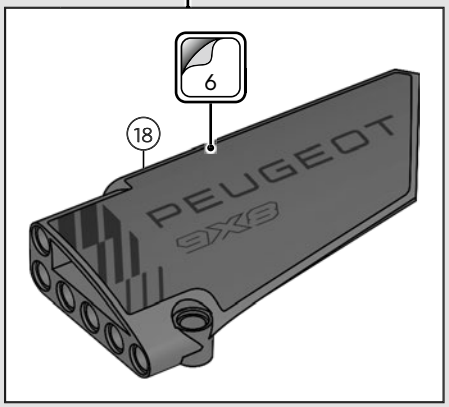

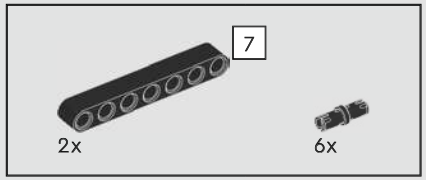

606

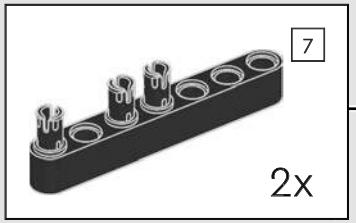

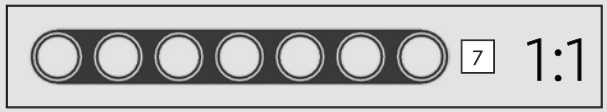

607

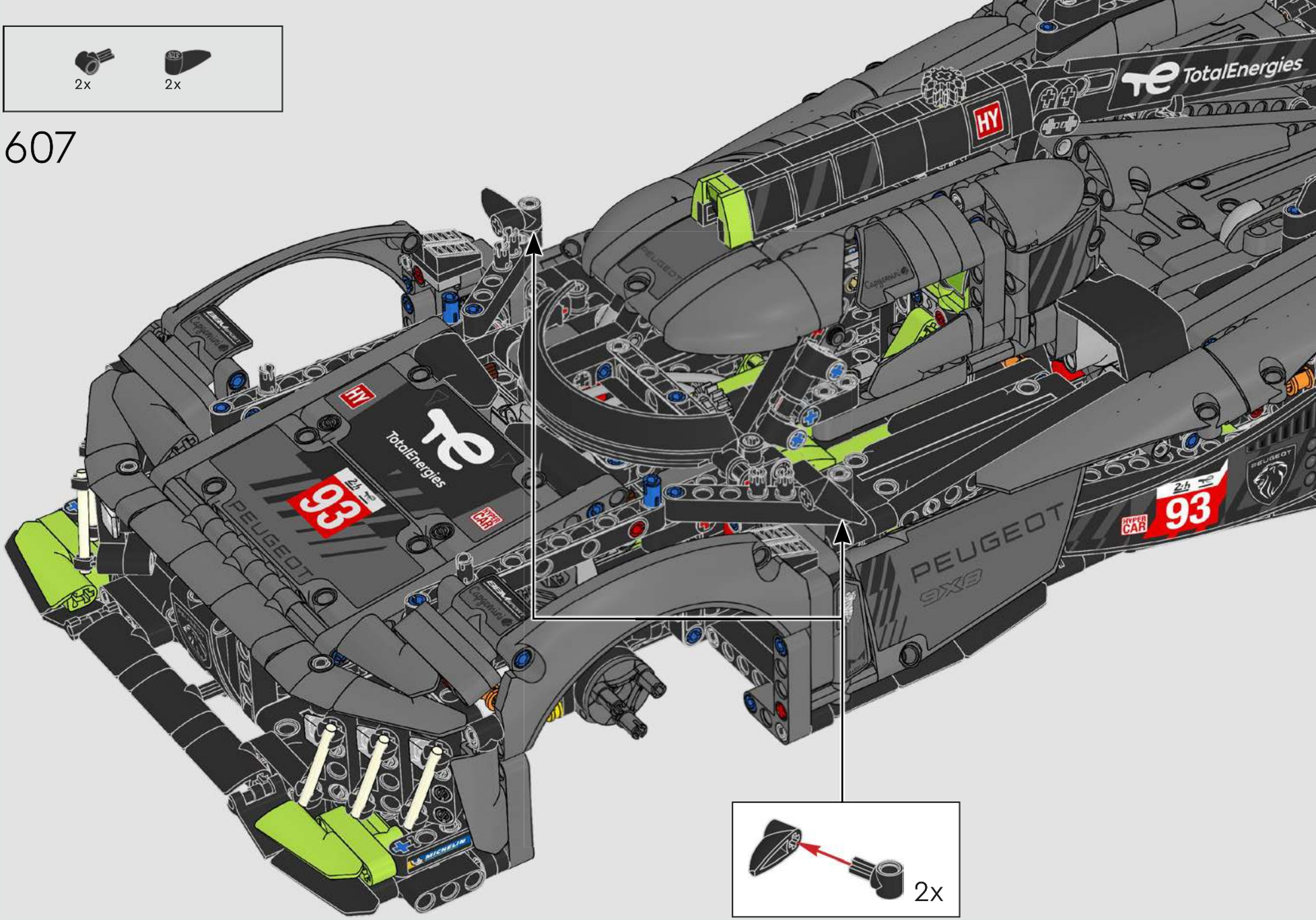

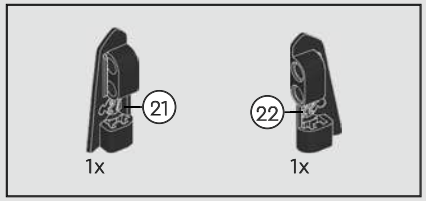

608

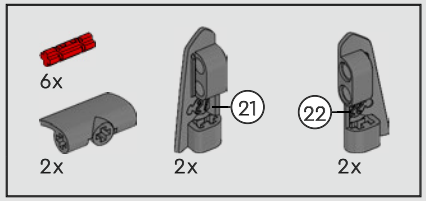

609

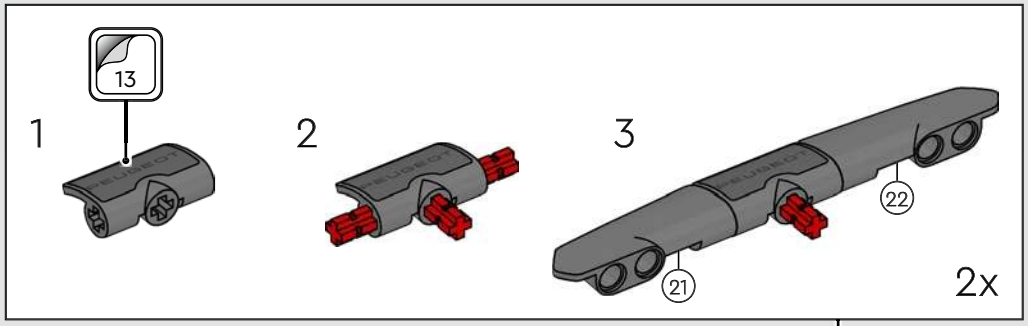

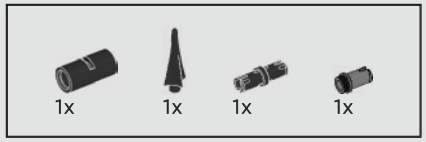

610

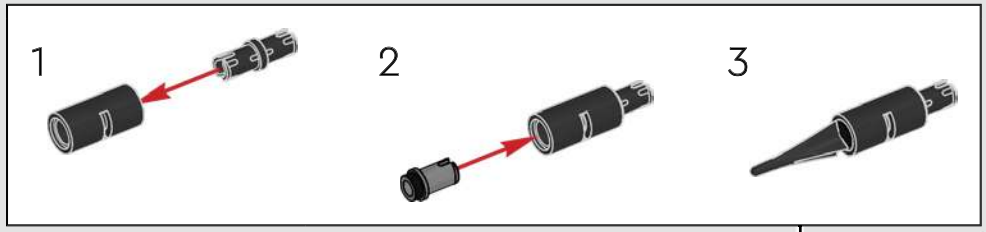

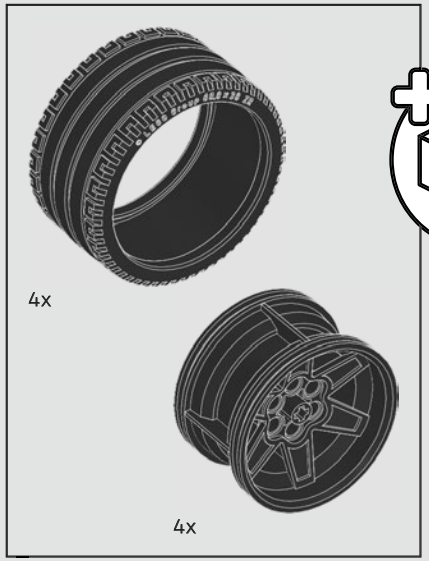

611

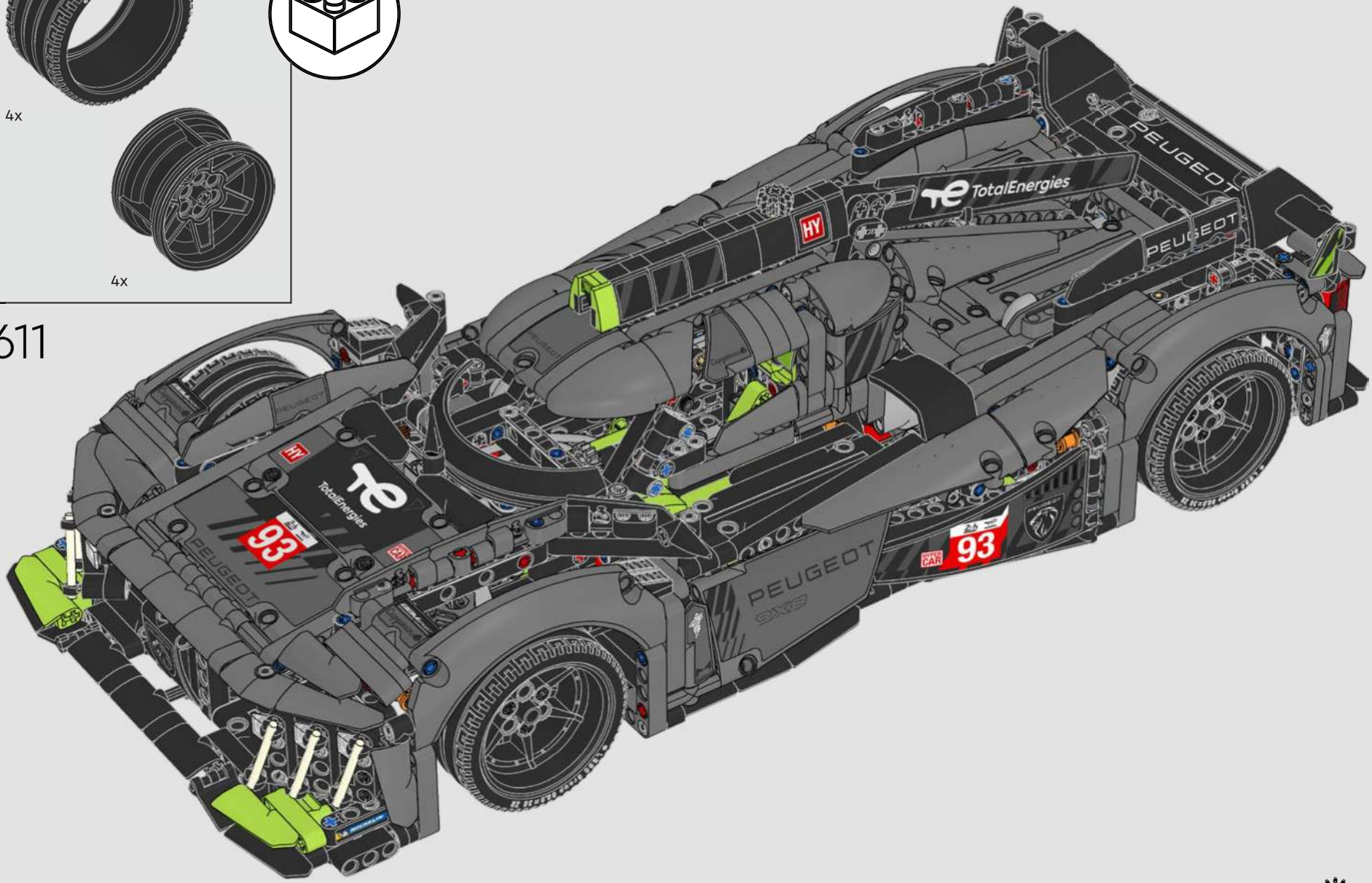

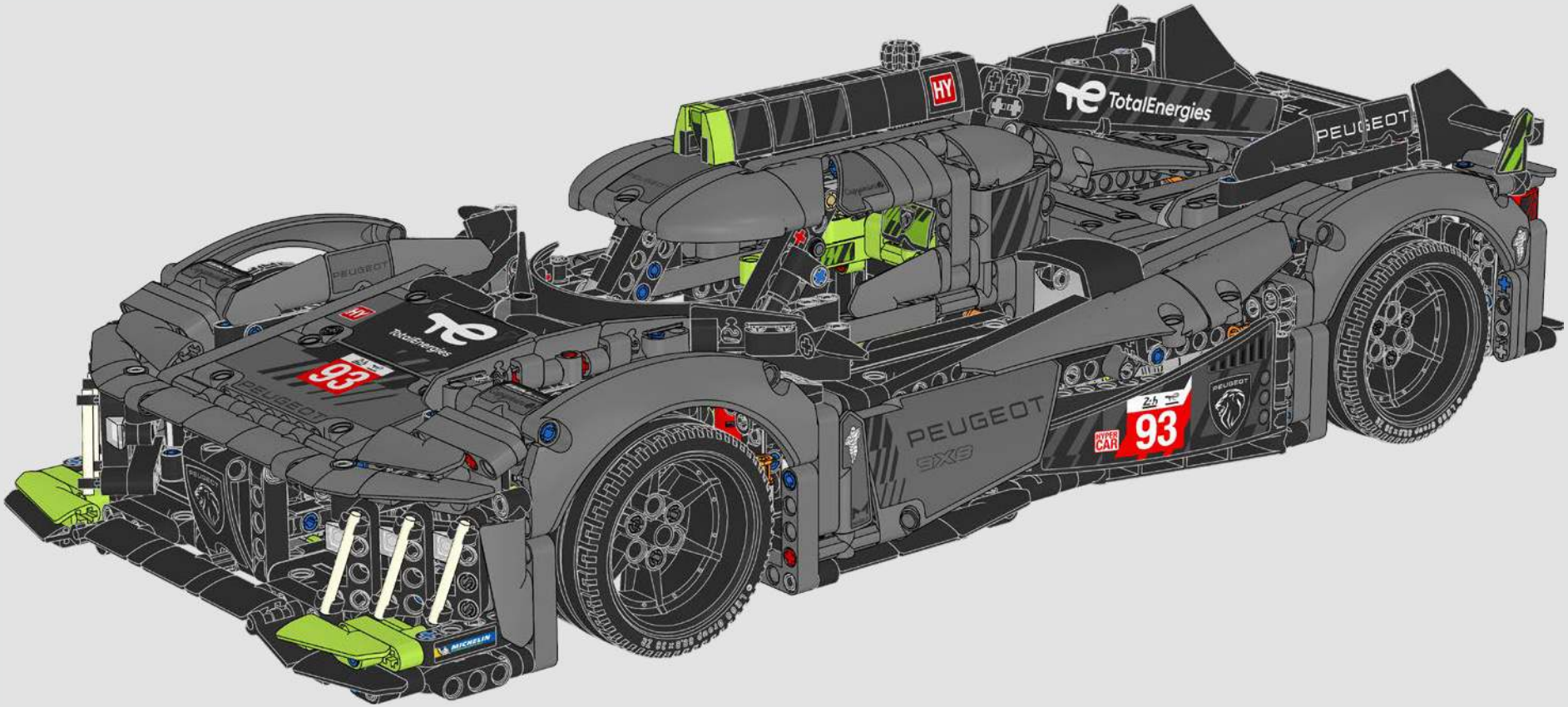
TotalEnergies
PEUGEOT
93
PEUGEOT
9X8
MICHELIN

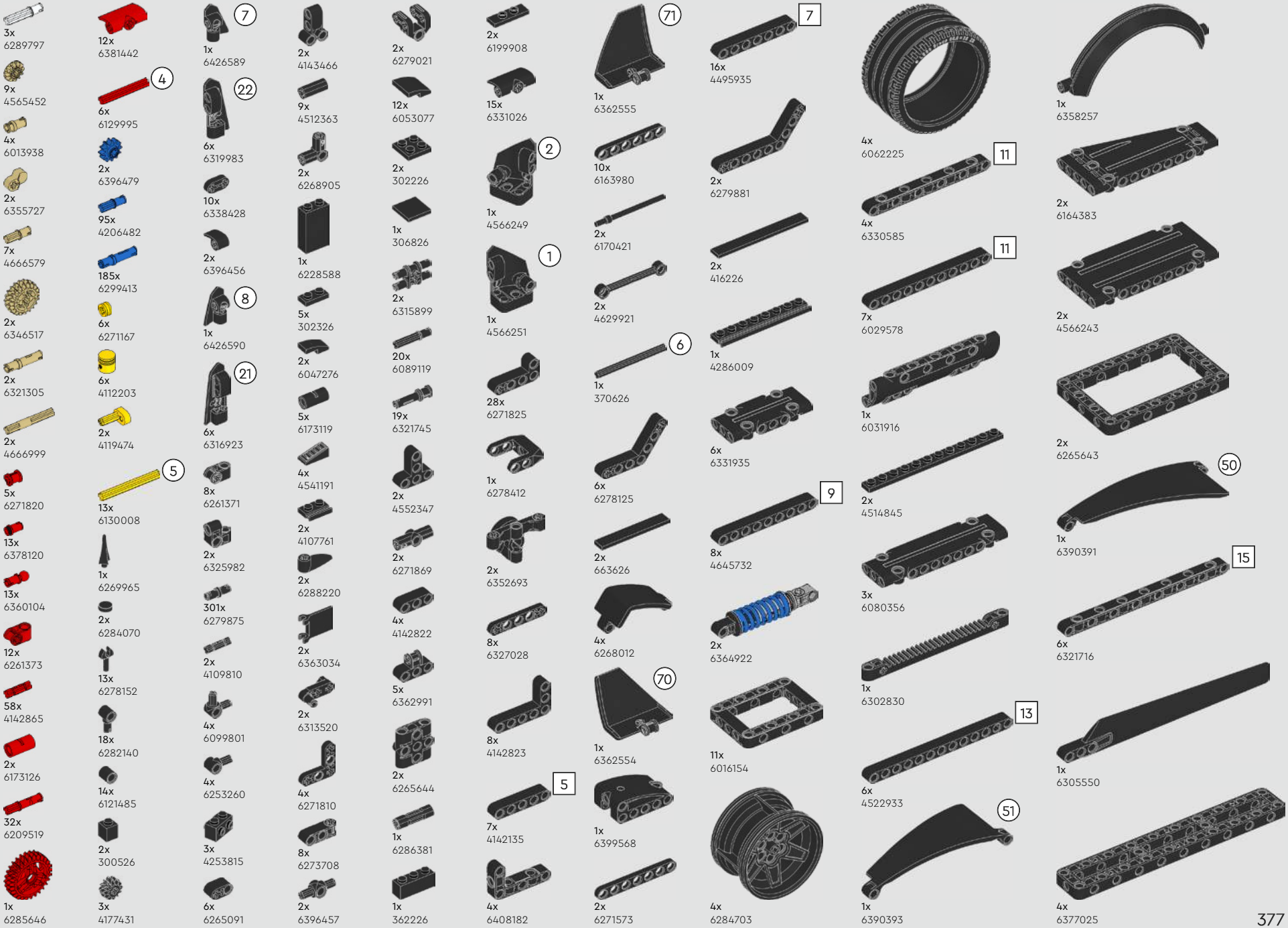
3x 6289797
9x 4565452
4x 6013938
2x 6355727
7x 4666579
2x 6346517
2x 6321305
2x 4666999
5x 6271820
13x 6378120
13x 6360104
12x 6261373
58x 4142865
2x 6173126
32x 6209519
1x 6285646
12x 6381442
4
6x 6129995
2x 6396479
95x 4206482
185x 6299413
6x 6271167
6x 4112203
2x 4119474
5
13x 6130008
1x 6269965
2x 6284070
13x 6278152
18x 6282140
14x 6121485
2x 300526
3x 4177431
7
1x 6426589
22
6x 6319983
10x 6338428
2x 6396456
8
1x 6426590
21
6x 6316923
8x 6261371
2x 6325982
301x 6279875
2x 4109810
4x 6099801
4x 6253260
3x 4253815
6x 6265091
2x 4143466
9x 4512363
2x 6268905
1x 6228588
5x 302326
2x 6047276
5x 6173119
4x 4541191
2x 4107761
2x 6288220
2x 6363034
2x 6313520
4x 6271810
8x 6273708
2x 6396457
2x 6279021
12x 6053077
2x 302226
1x 306826
2x 6315899
20x 6089119
19x 6321745
2x 4552347
2x 6271869
4x 4142822
5x 6362991
2x 6265644
1x 6286381
1x 362226
2x 6199908
15x 6331026
2
1x 4566249
1
1x 4566251
28x 6271825
1x 6278412
2x 6352693
8x 6327028
8x 4142823
5
7x 4142135
4x 6408182
71
1x 6362555
10x 6163980
2x 6170421
2x 4629921
6
1x 370626
6x 6278125
2x 663626
4x 6268012
70
1x 6362554
1x 6399568
2x 6271573
7
16x 4495935
2x 6279881
2x 416226
1x 4286009
6x 6331935
9
8x 4645732
2x 6364922
11x 6016154
4x 6284703
4x 6062225
11
4x 6330585
11
7x 6029578
1x 6031916
2x 4514845
3x 6080356
1x 6302830
13
6x 4522933
51
1x 6390393
1x 6358257
2x 6164383
2x 4566243
2x 6265643
50
1x 6390391
15
6x 6321716
1x 6305550
4x 6377025

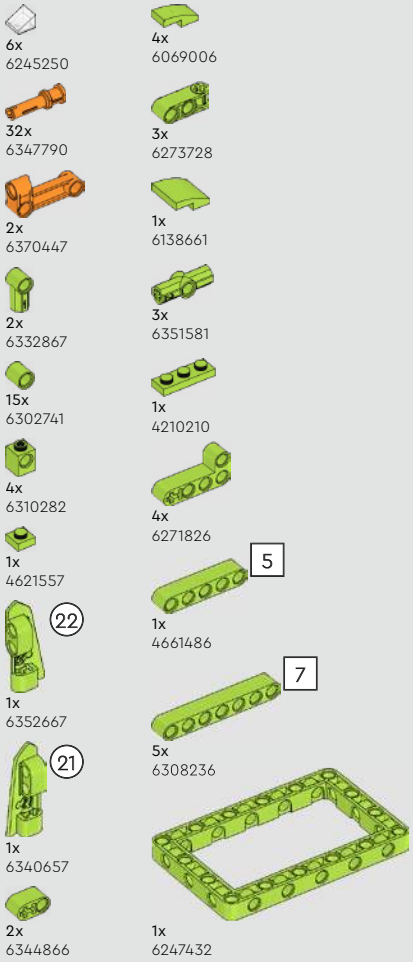
6x 6245250
32x 6347790
2x 6370447
2x 6332867
15x 6302741
4x 6310282
1x 4621557
22
1x 6352667
21
1x 6340657
2x 6344866
4x 6069006
3x 6273728
1x 6138661
3x 6351581
1x 4210210
4x 6271826
5
1x 4661486
7
5x 6308236
1x 6247432

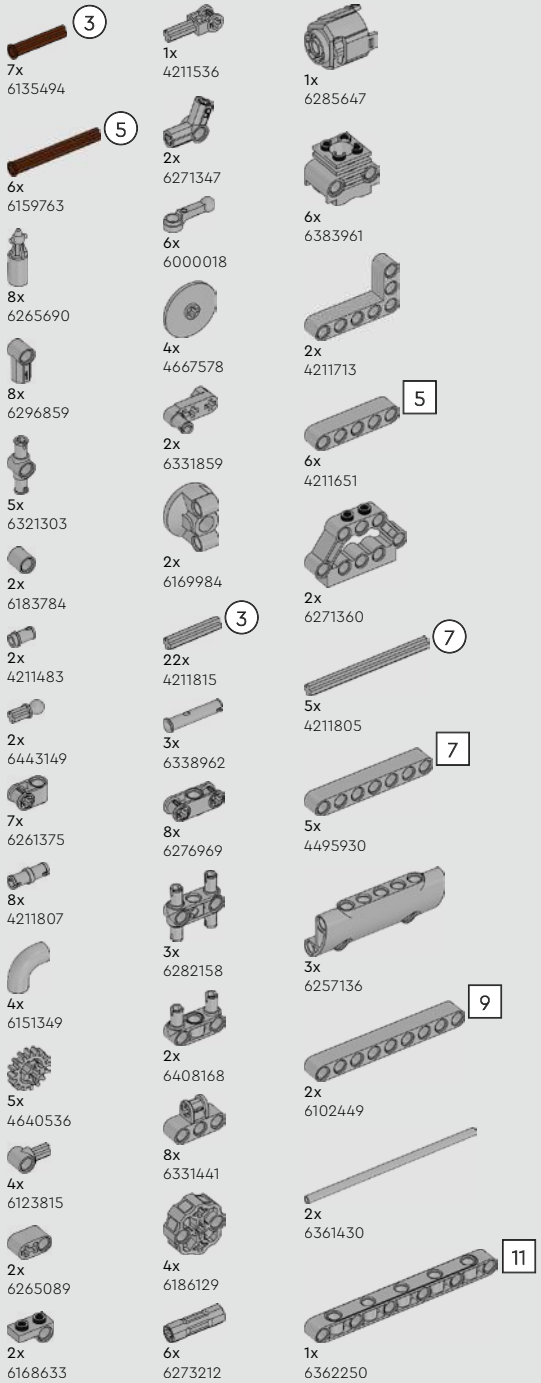
3
7x 6135494
5
6x 6159763
8x 6265690
8x 6296859
5x 6321303
2x 6183784
2x 4211483
2x 6443149
7x 6261375
8x 4211807
4x 6151349
5x 4640536
4x 6123815
2x 6265089
2x 6168633
1x 4211536
2x 6271347
6x 6000018
4x 4667578
2x 6331859
2x 6169984
3
22x 4211815
3x 6338962
8x 6276969
3x 6282158
2x 6408168
8x 6331441
4x 6186129
6x 6273212
1x 6285647
6x 6383961
2x 4211713
5
6x 4211651
2x 6271360
7
5x 4211805
7
5x 4495930
3x 6257136
9
2x 6102449
2x 6361430
11
1x 6362250

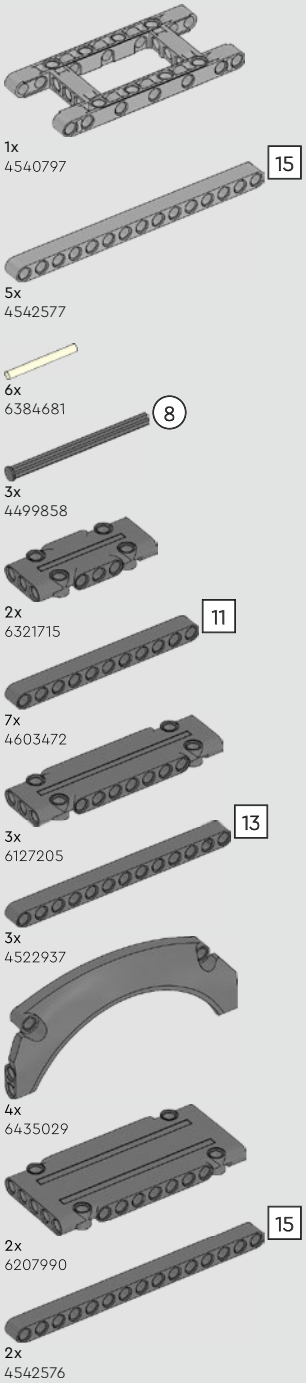
1x 4540797
15
5x 4542577
6x 6384681
8
3x 4499858
2x 6321715
11
7x 4603472
3x 6127205
13
3x 4522937
4x 6435029
2x 6207990
15
2x 4542576

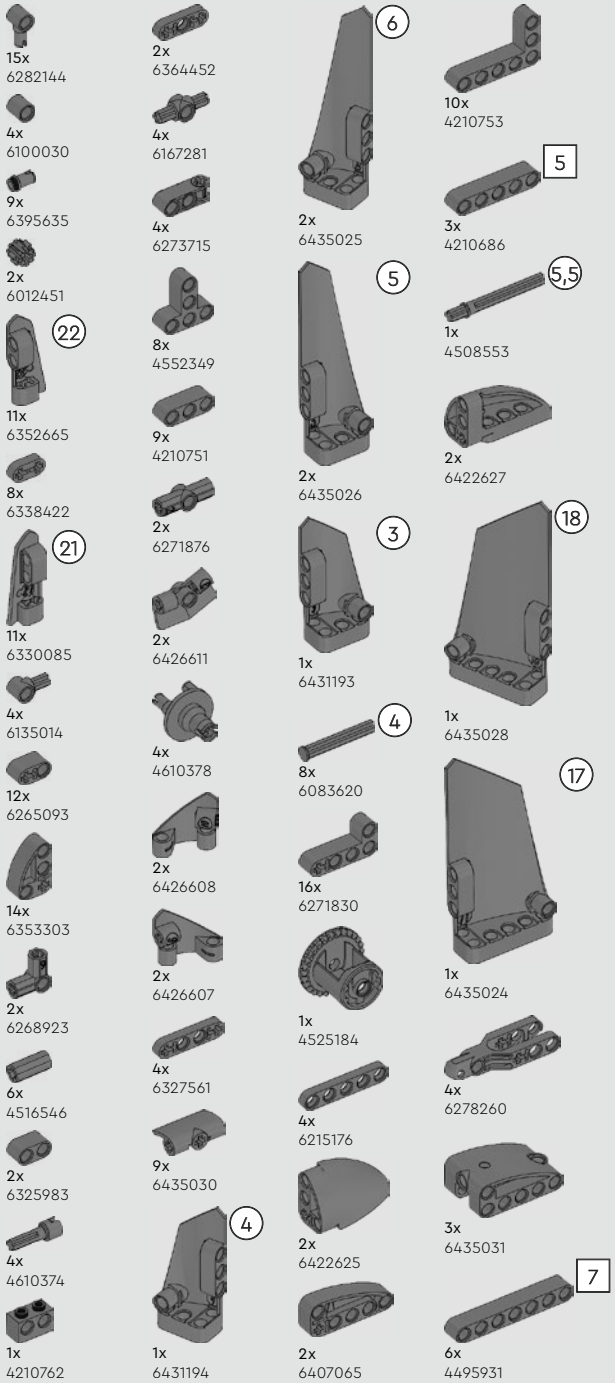
15x 6282144
4x 6100030
9x 6395635
2x 6012451
22
11x 6352665
8x 6338422
21
11x 6330085
4x 6135014
12x 6265093
14x 6353303
2x 6268923
6x 4516546
2x 6325983
4x 4610374
1x 4210762
2x 6364452
4x 6167281
4x 6273715
8x 4552349
9x 4210751
2x 6271876
2x 6426611
4x 4610378
2x 6426608
2x 6426607
4x 6327561
9x 6435030
4
1x 6431194
6
2x 6435025
5
2x 6435026
3
1x 6431193
4
8x 6083620
16x 6271830
1x 4525184
4x 6215176
2x 6422625
2x 6407065
10x 4210753
5
3x 4210686
5,5
1x 4508553
2x 6422627
18
1x 6435028
17
1x 6435024
4x 6278260
3x 6435031
7
6x 4495931

LEGO.com/service

YOU COULD WIN

YOU COULD
WIN

Your feedback will help shape the future development of this product series.

Visit:

DU KÖNNTEST
GEWINNEN

Dein Feedback trägt zur Weiterentwicklung dieser Produktreihe bei.

Geh auf:

VOUS POURRIEZ
GAGNER

Vos commentaires nous aideront à concevoir les futurs produits de cette gamme.

Visitez :

POTRESTI
VINCERE TU

La tua opinione ci aiuterà a migliorare la creazione futura di questa linea di prodotti.

Visita:

PUEDES
GANAR

Tu opinión contribuirá al futuro de esta serie de productos.

Visita:

轻松获奖

您的反馈将有助于我们在今后改进本产品系列。

请访问：

LEGO.com/productfeedback

You also have the chance to win a LEGO® set.

Terms and conditions apply.*

Außerdem hast du die Chance, ein LEGO® Set zu gewinnen.

Es gelten die Teilnahmebedingungen.*

Vous pourriez également gagner un ensemble LEGO®.

Des conditions s'appliquent.*

Hai anche la possibilità di vincere un set LEGO®.

Termini e condizioni sono applicabili.*

También tienes la oportunidad de ganar un set LEGO®.

Aplican términos y condiciones.*

您还有机会赢取乐高®套装。

条款和条件适用。*

**LEGO.com/productfeedback-terms*

LEGO and the LEGO logo are trademarks of the LEGO Group. ©2023 The LEGO Group.

Product under license by PEUGEOT™

Copyright © 24 Hours of Le Mans. « Le Mans », « 24 Hours of Le Mans » and the 24 Hours of Le Mans' logo are registered trademarks of the Automobile Club de l'Ouest and are used under license by the LEGO Group.

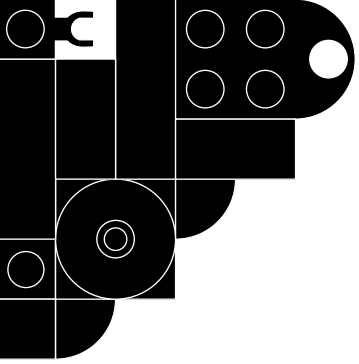

PEUGEOT

24h LE MANS®

OFFICIAL PRODUCT

6500752