BLANCO

BLANCO SELECT II Big

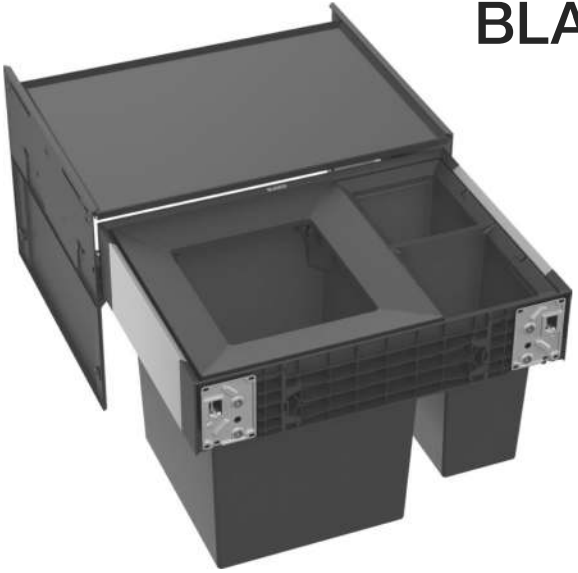

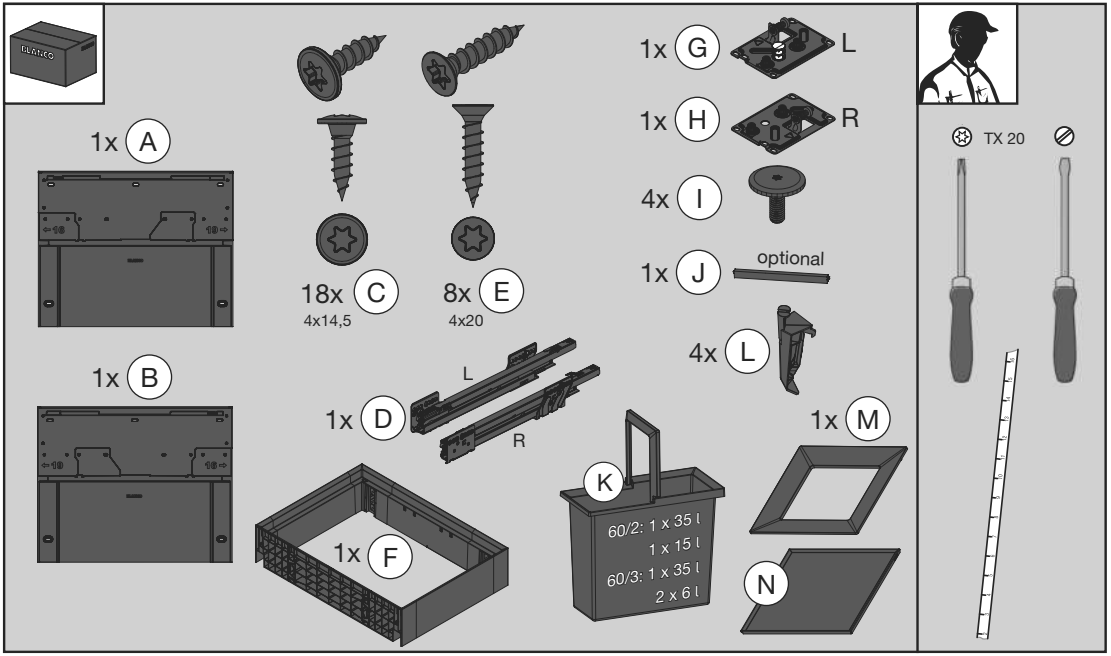
PLATICO
1x A
1x B
18x C
4x14,5
8x E
4x20
1x D
L
R
1x F
K
60/2: 1 x 35 l
1 x 15 l
60/3: 1 x 35 l
2 x 6 l
1x G
L
1x H
R
4x I
1x J
optional
4x L
1x M
N
TX 20

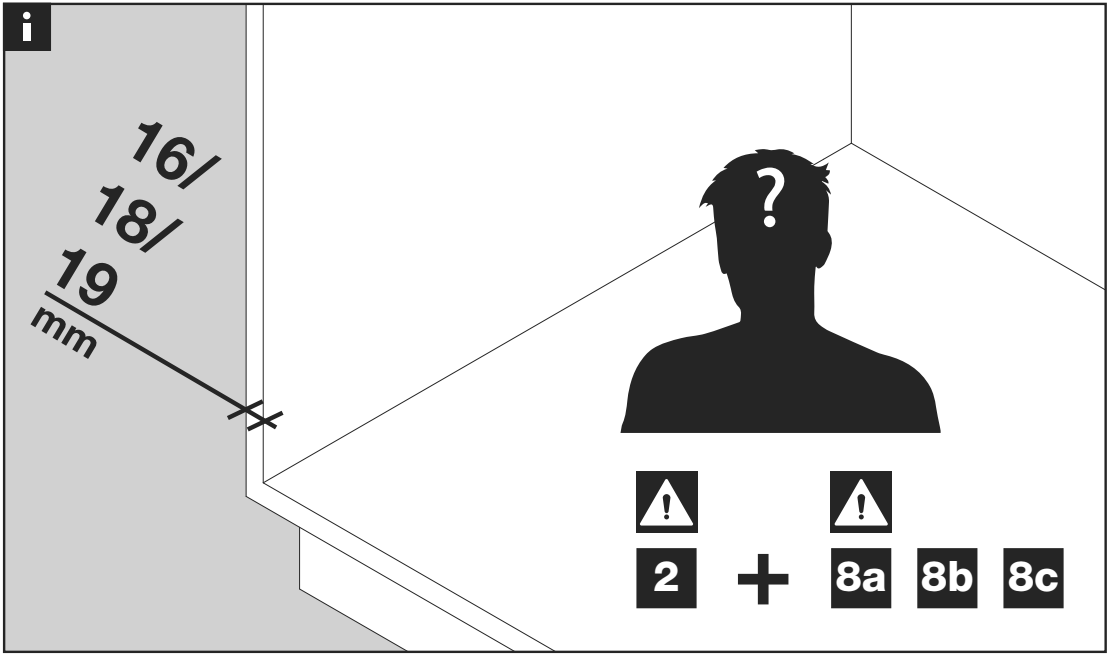
i
16/
18/
19
mm
?
2
+
8a
8b
8c

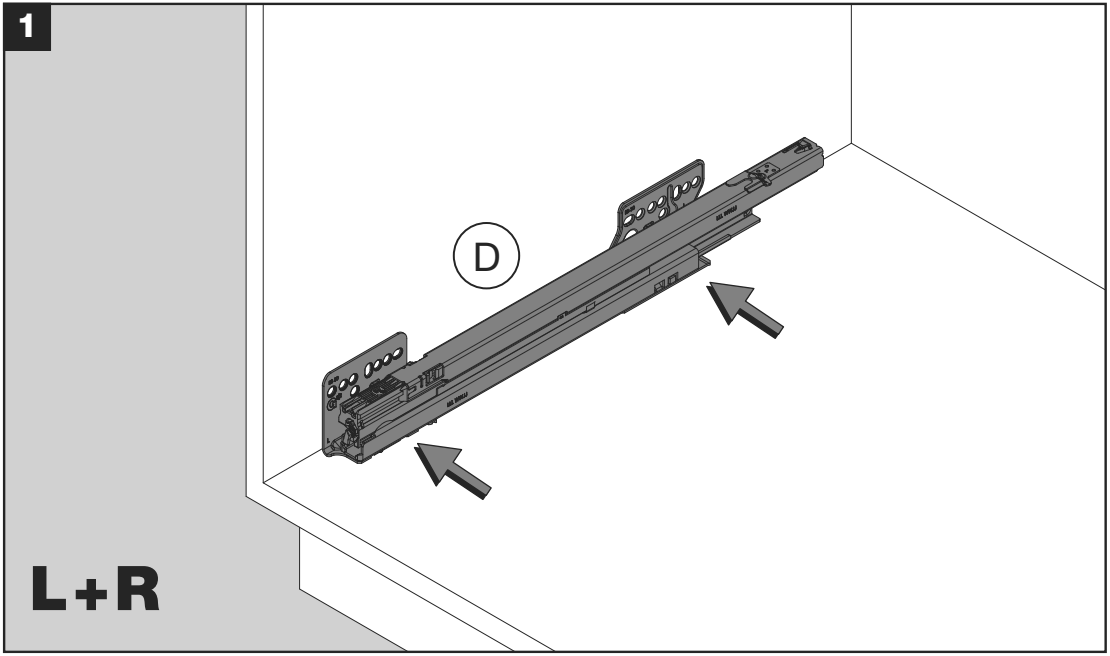
1
D
L+R

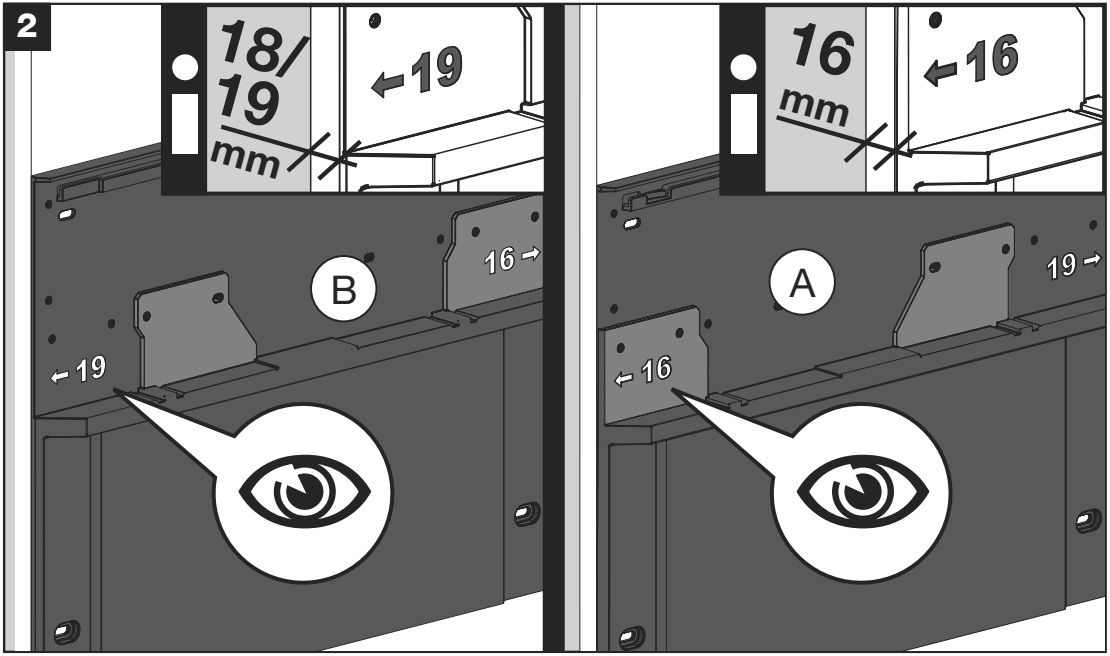
2
18/
19
mm
19
B
16
19
16
mm
16
A
19
16

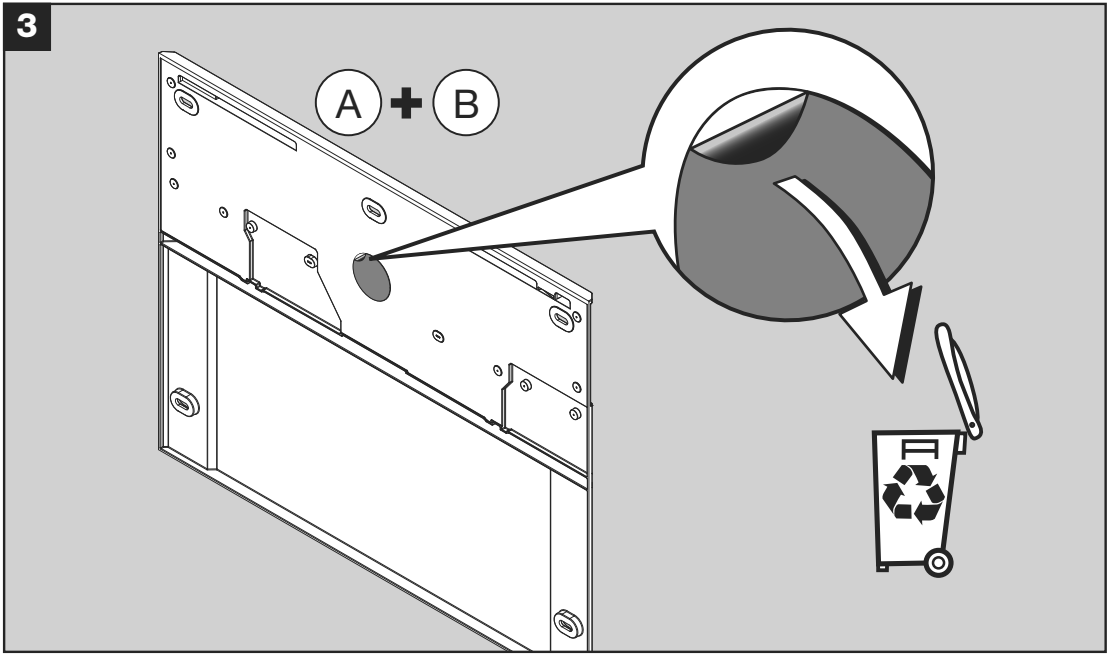
3
A
B

4

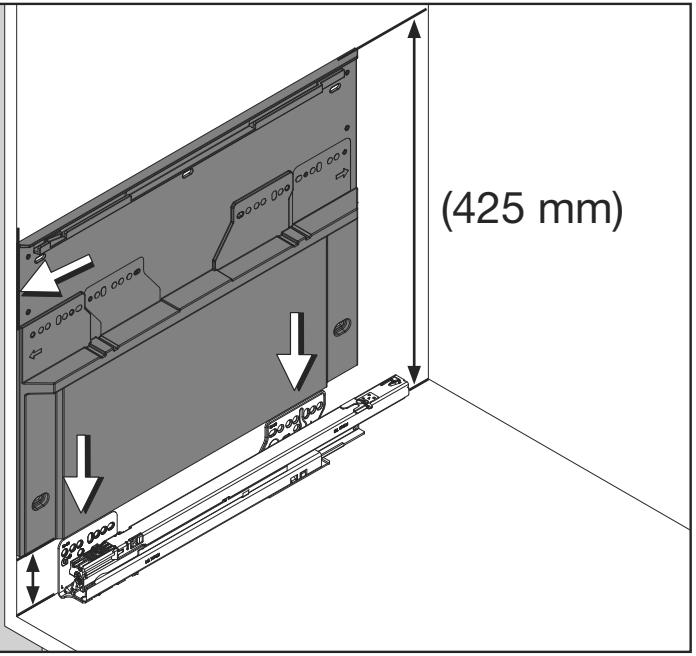

L+R (64 mm)

5

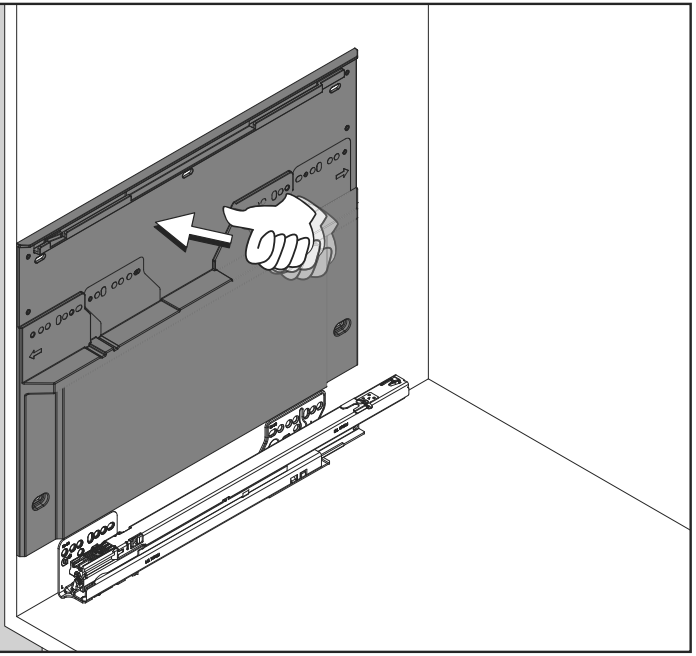

L+R

6

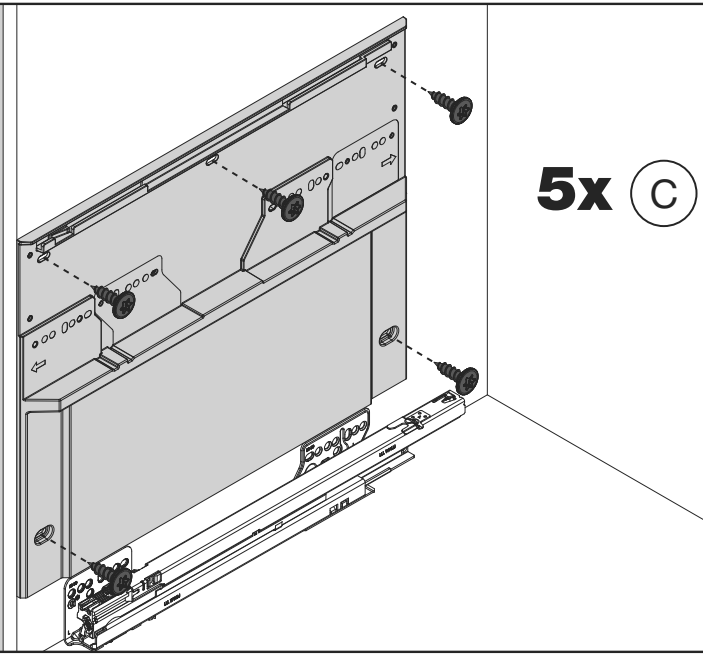

L+R

7

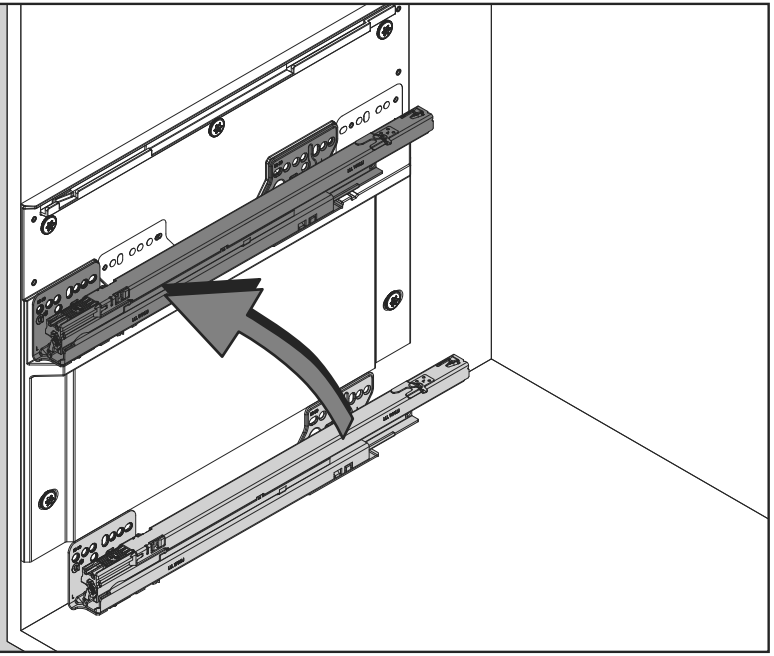

L+R

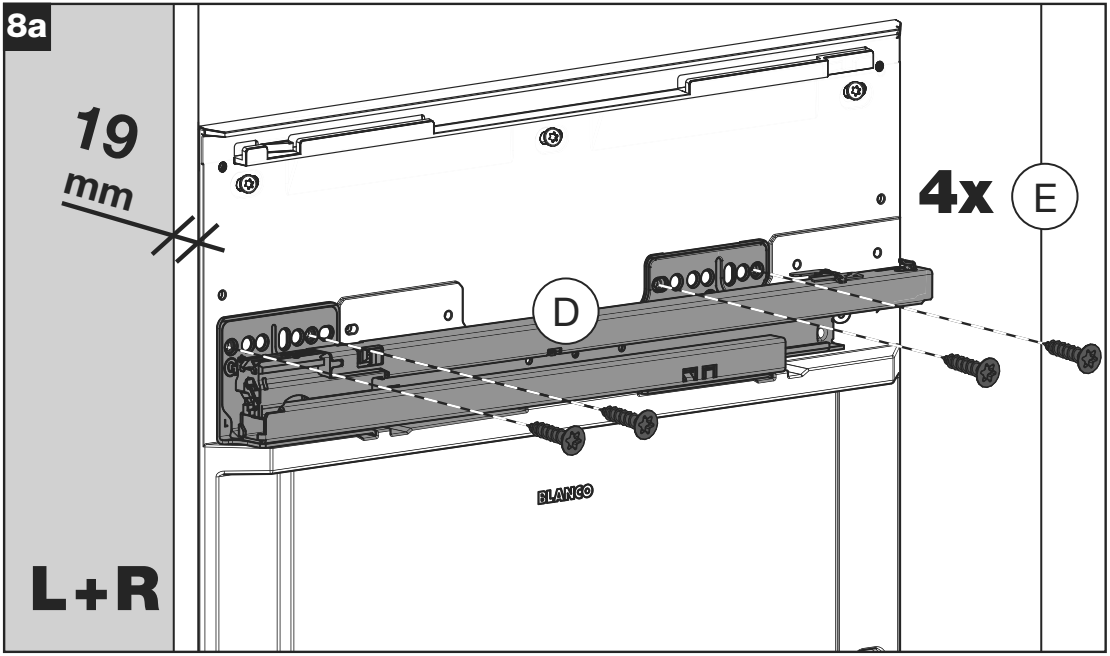
8a
19
mm
L+R
4x
E
D
BLANCO

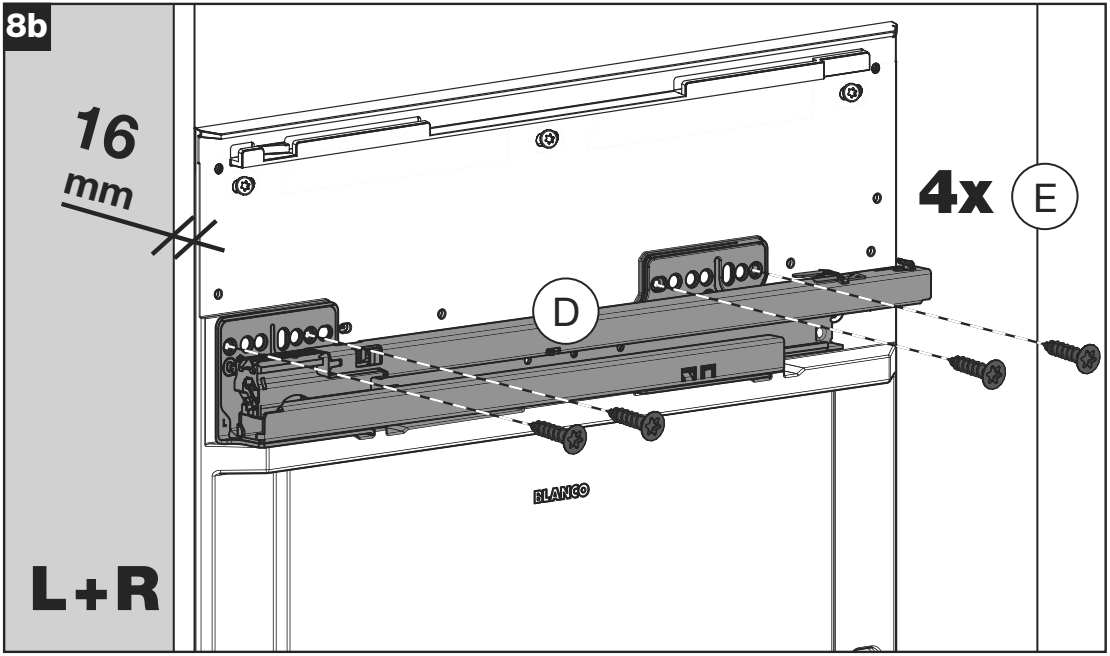
8b
16
mm
4x
E
D
BLANCO
L+R

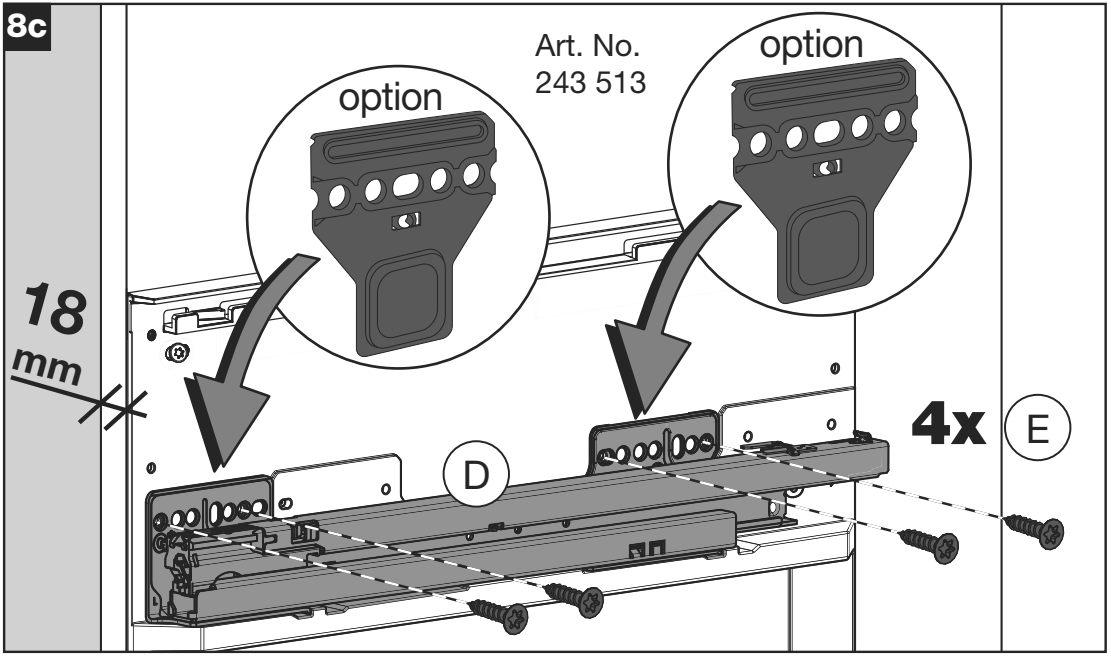
8c
Art. No.
243 513
option
option
18
mm
D
4x
E

9

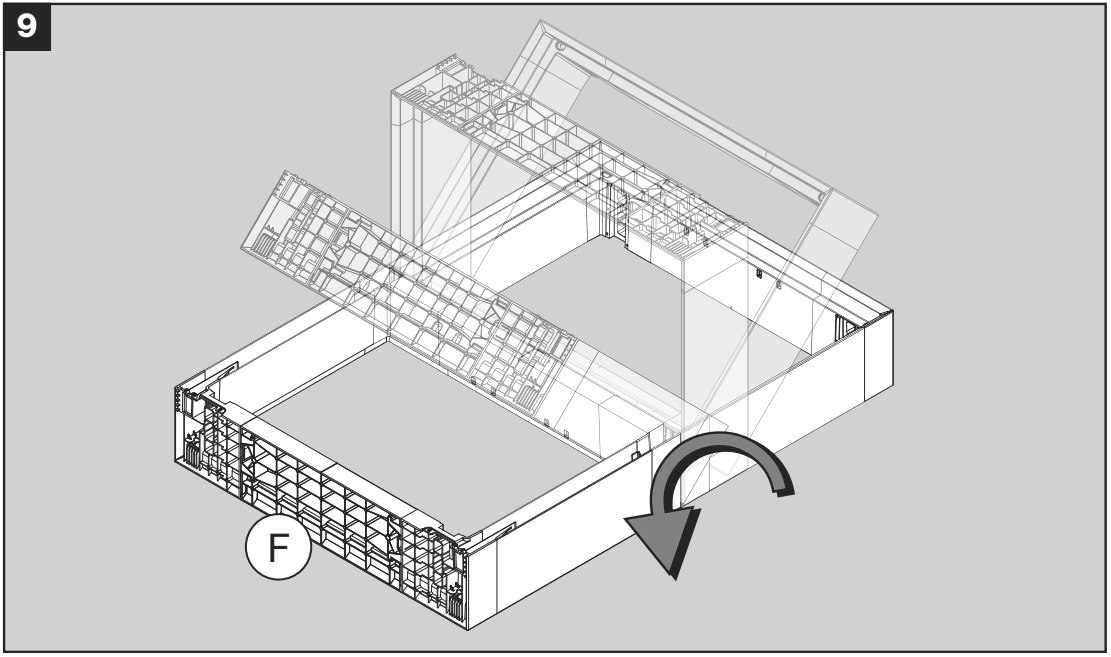

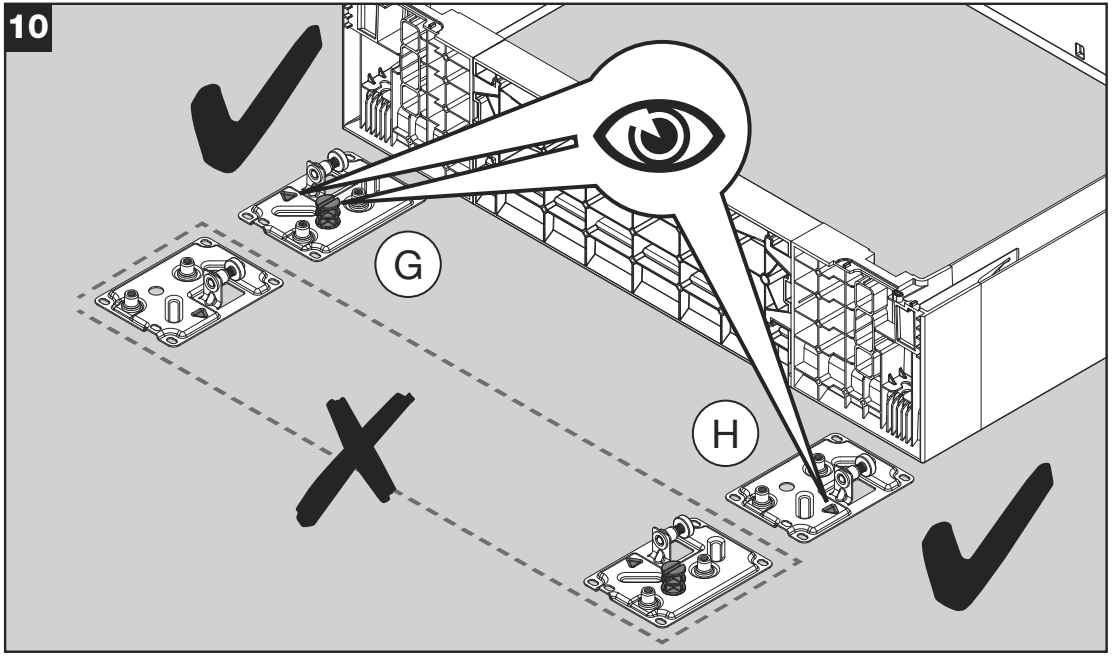
10
G
H

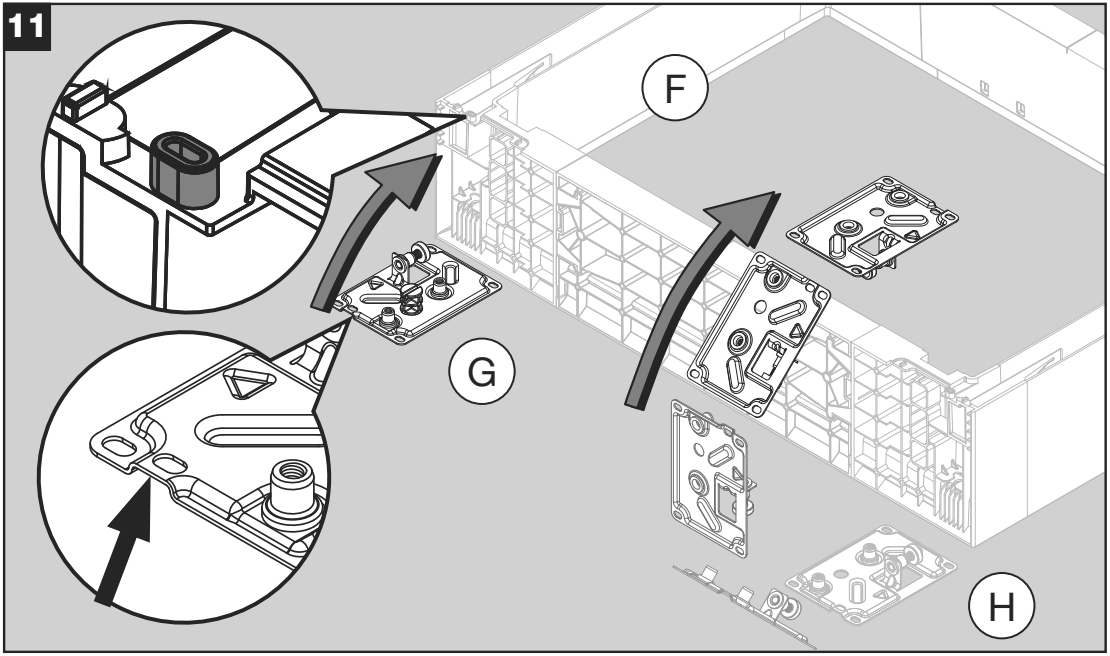
11
F
G
H

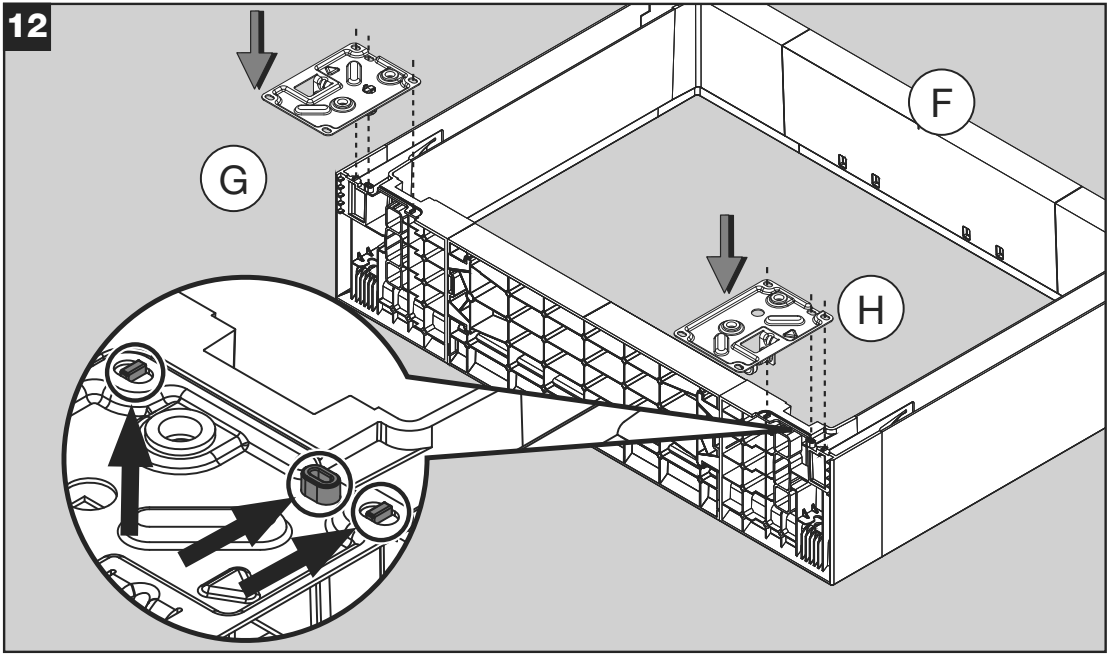
12
G
F
H

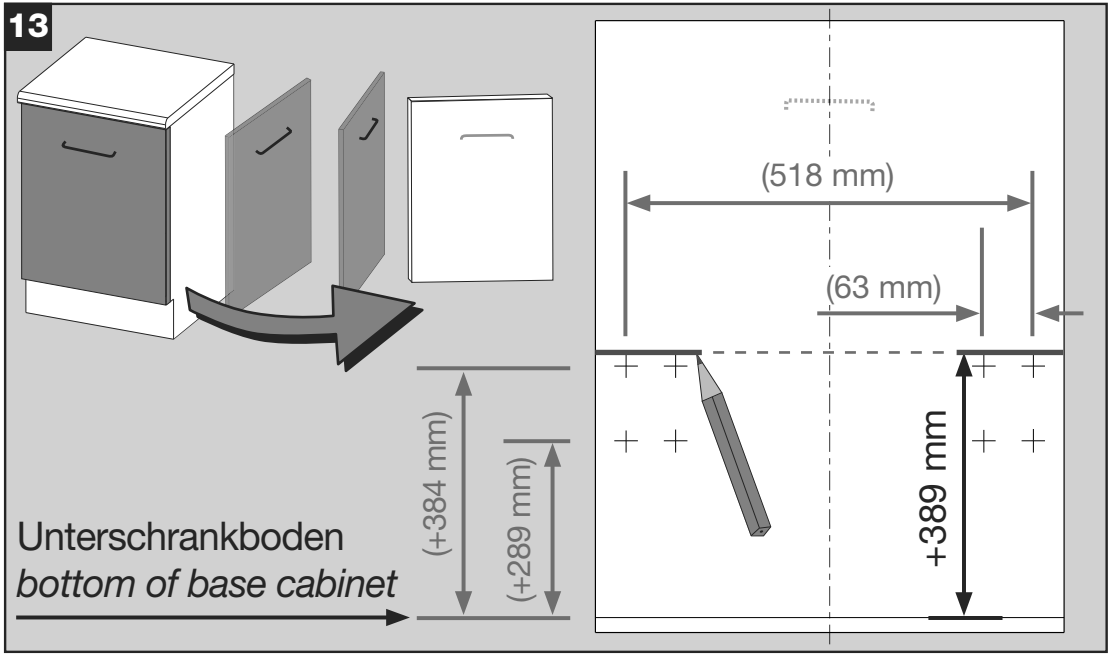
13
(518 mm)
(63 mm)
(+384 mm)
(+289 mm)
+389 mm
Unterschrankboden
bottom of base cabinet

14

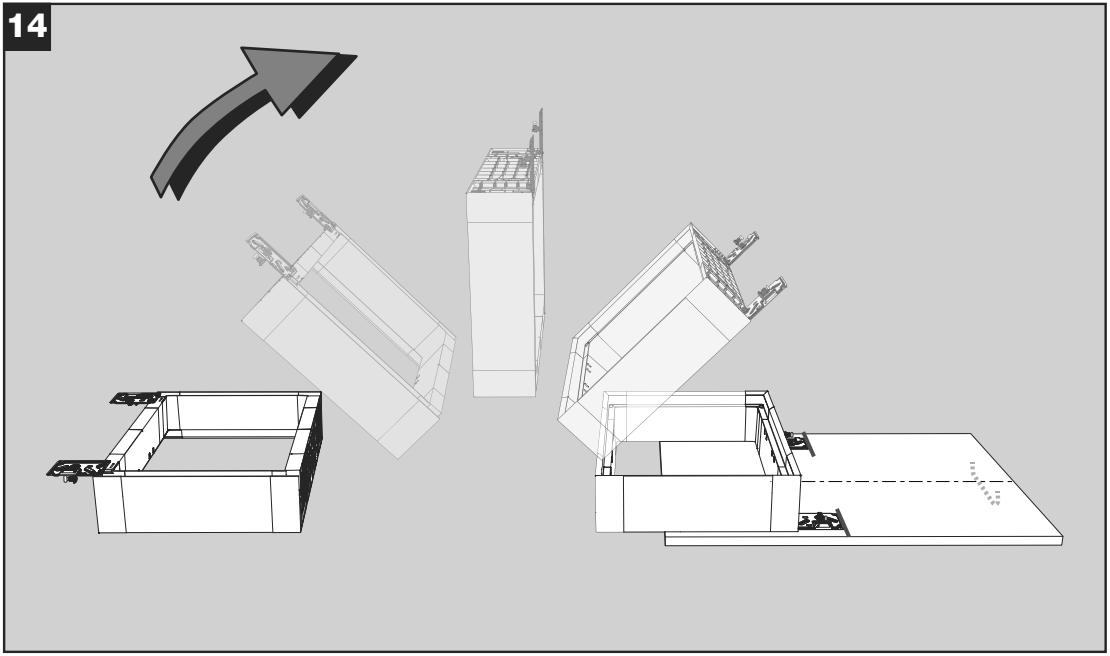

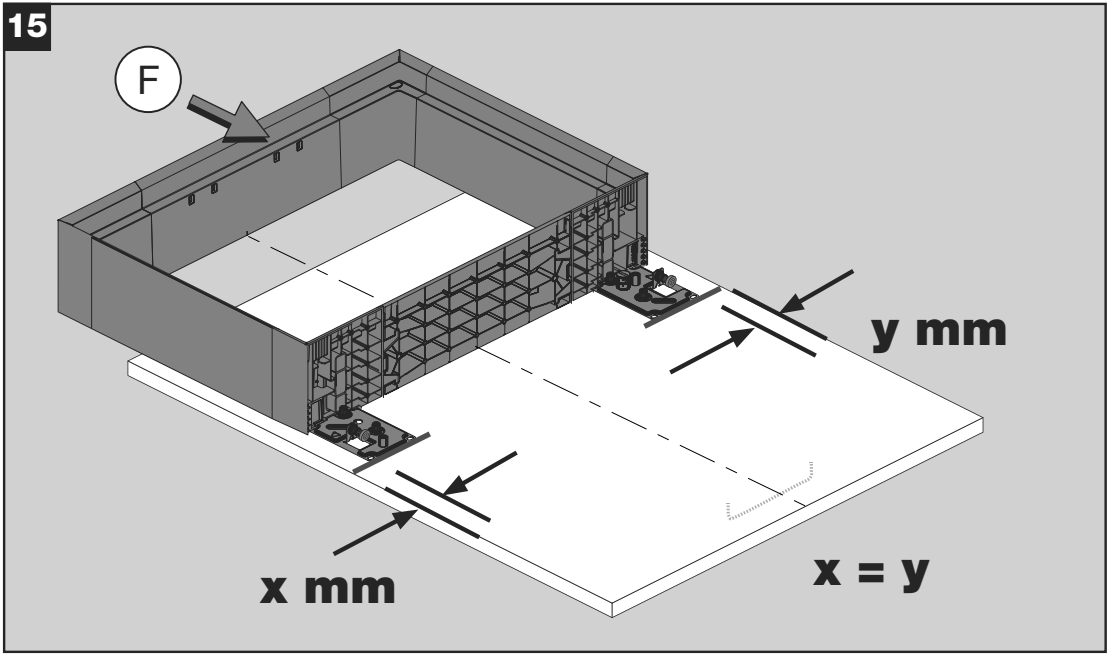
15
F
y mm
x mm
x = y

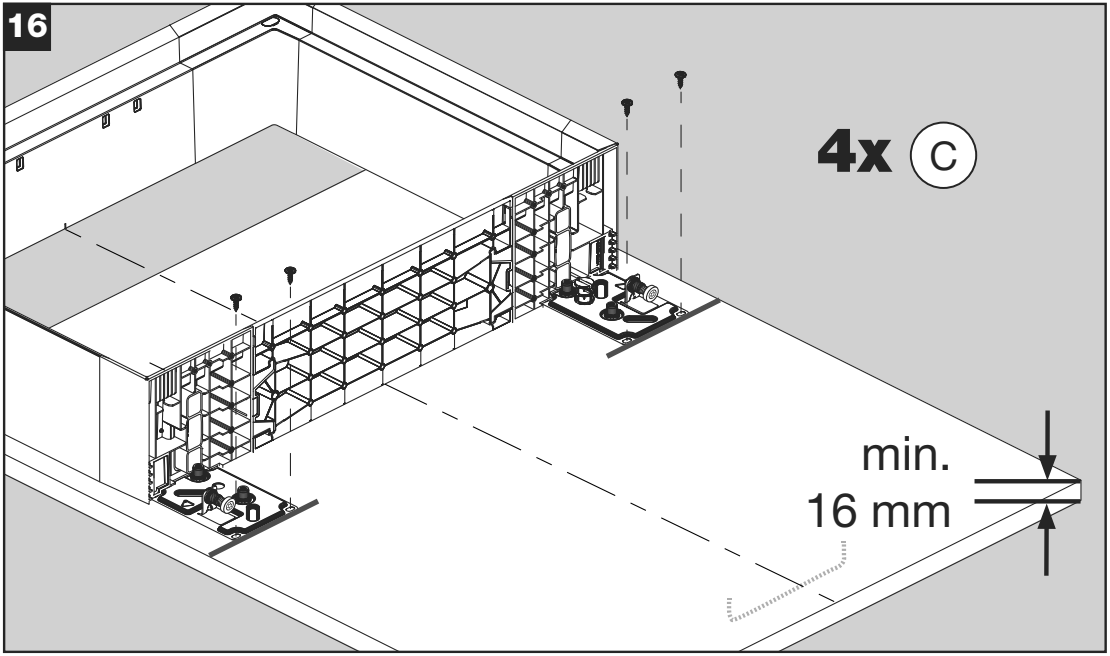
16
4x C
min.
16 mm

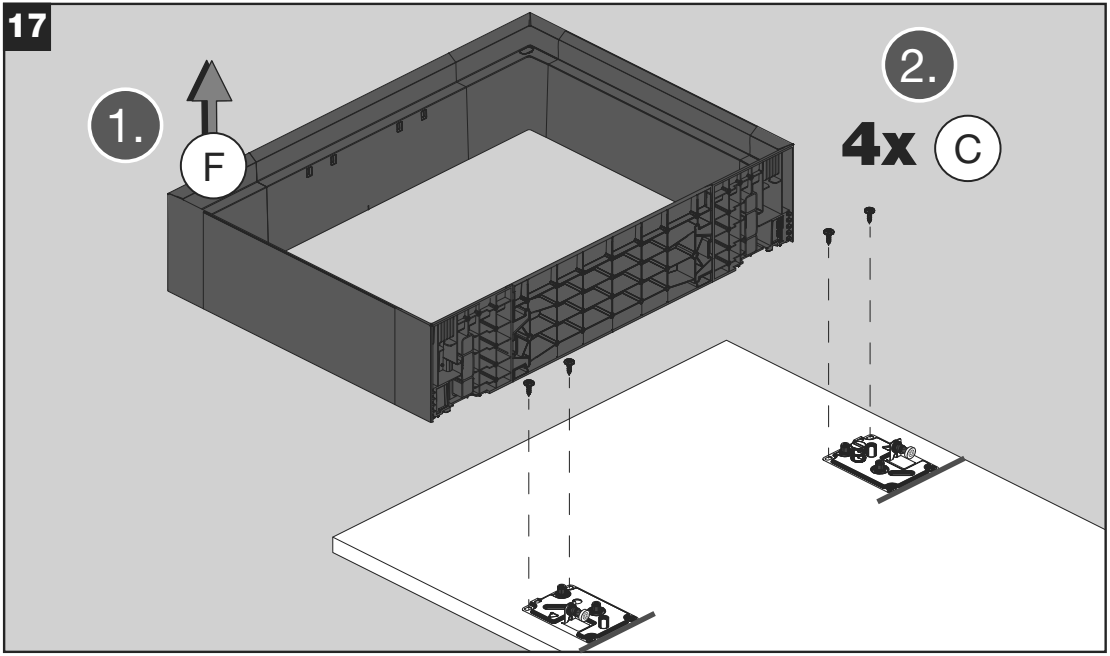
17
1.
F
2.
4x
C

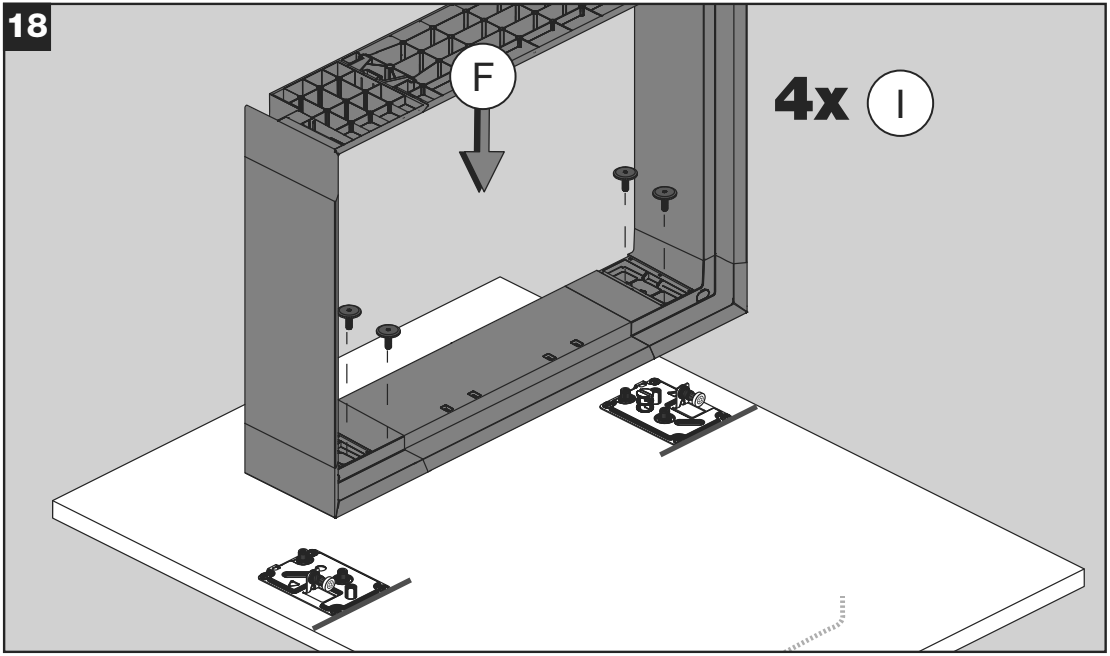
18
F
4x I

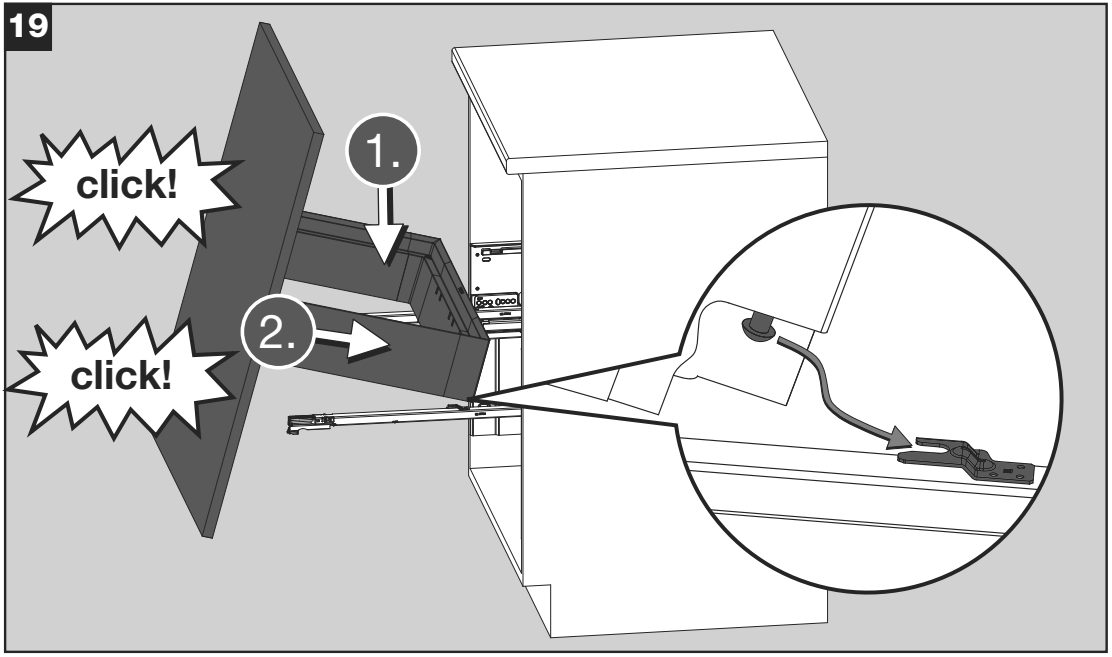
19
click!
1.
2.
click!

20

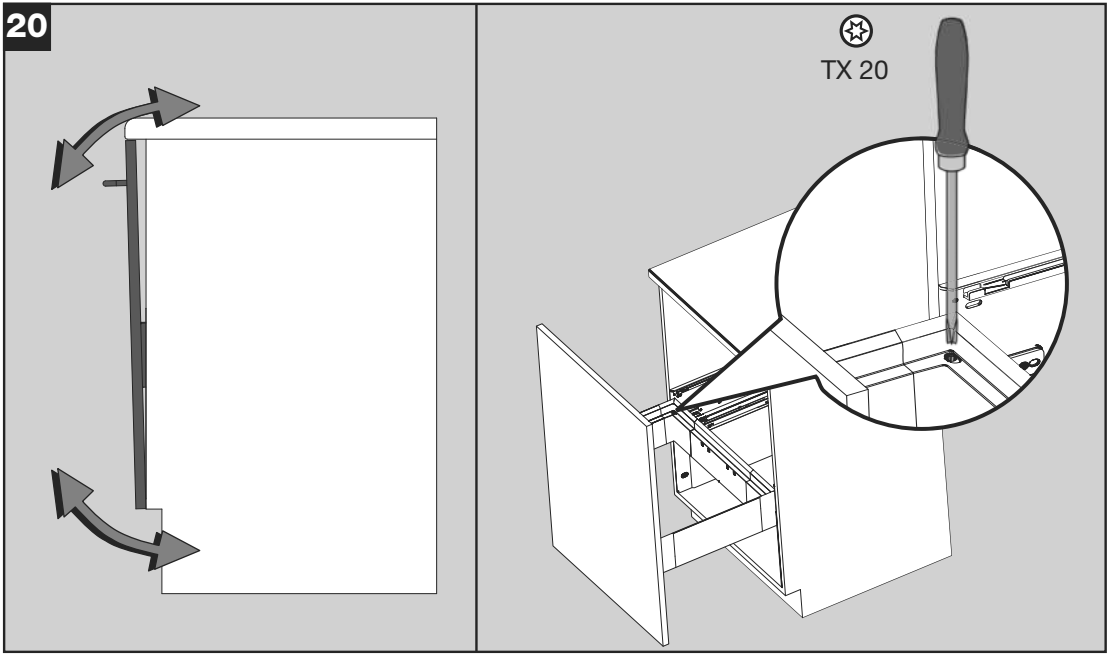

21

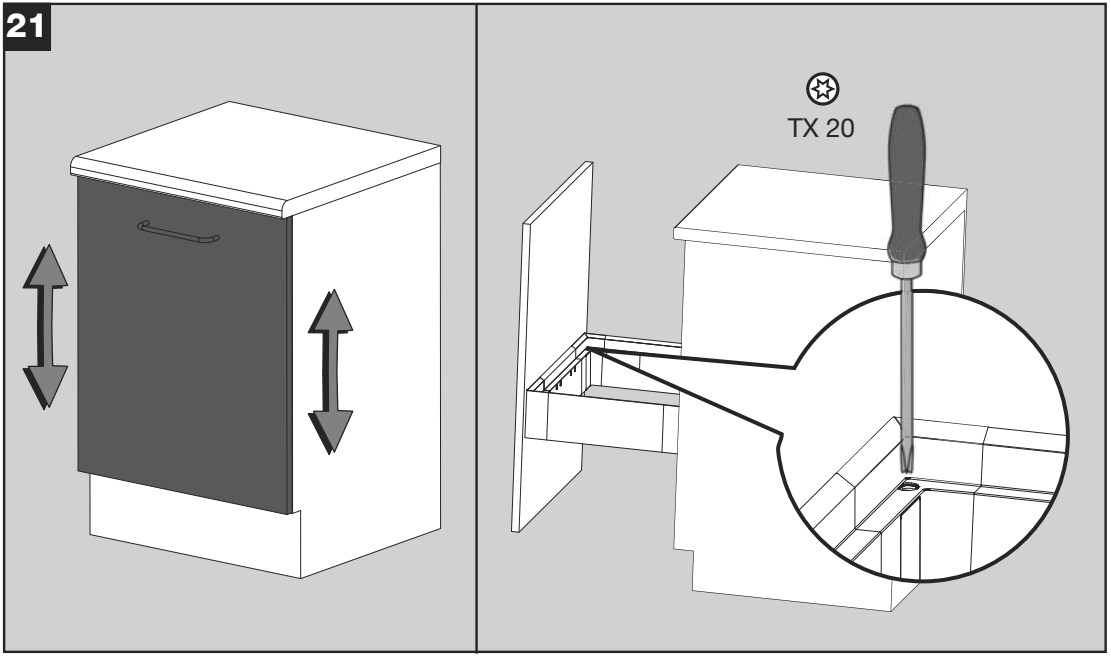

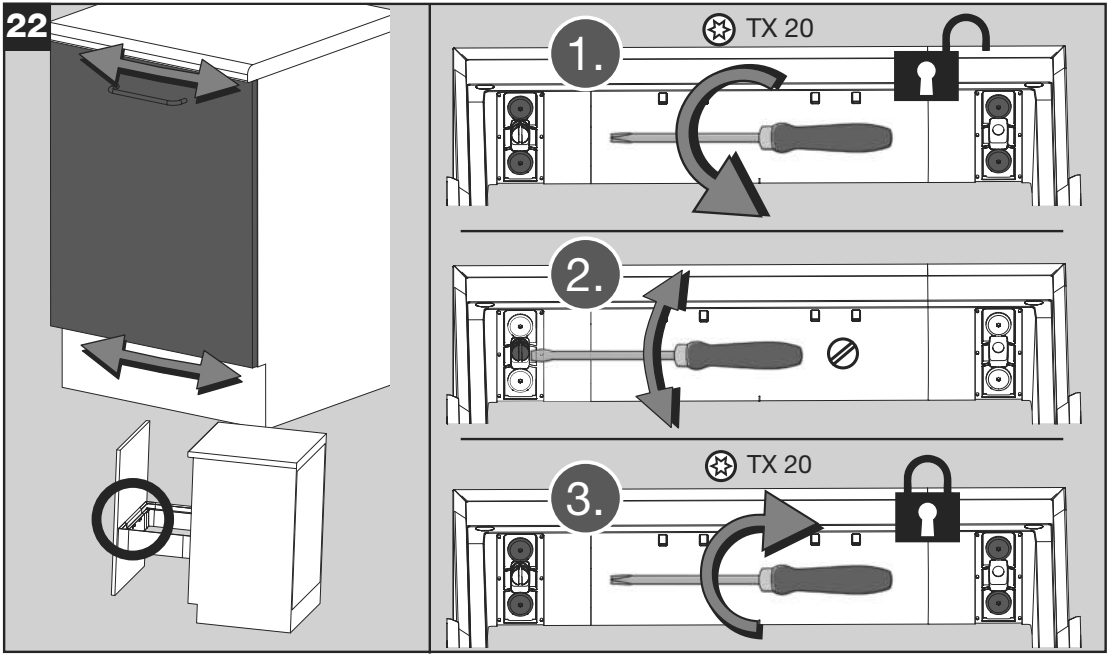
TX 20
1.
2.
TX 20
3.

23

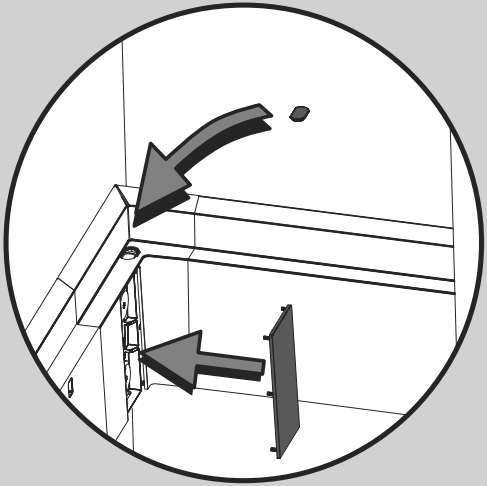

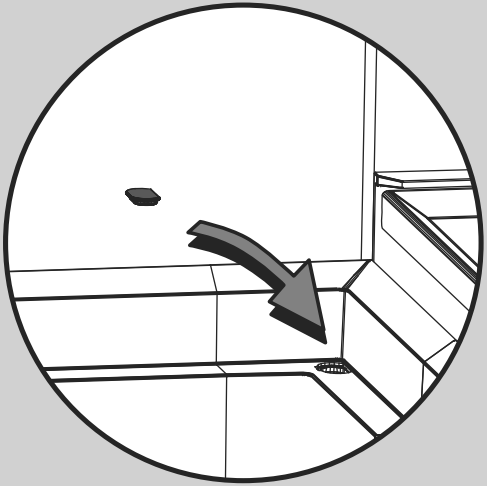

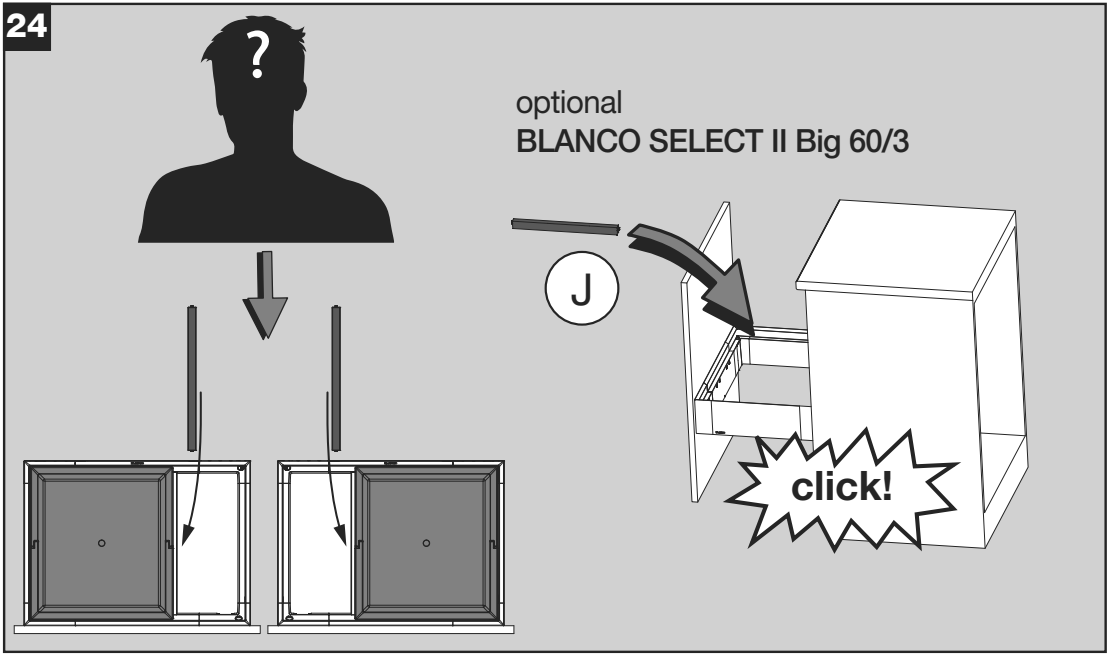
?
optional
BLANCO SELECT II Big 60/3
J
click!

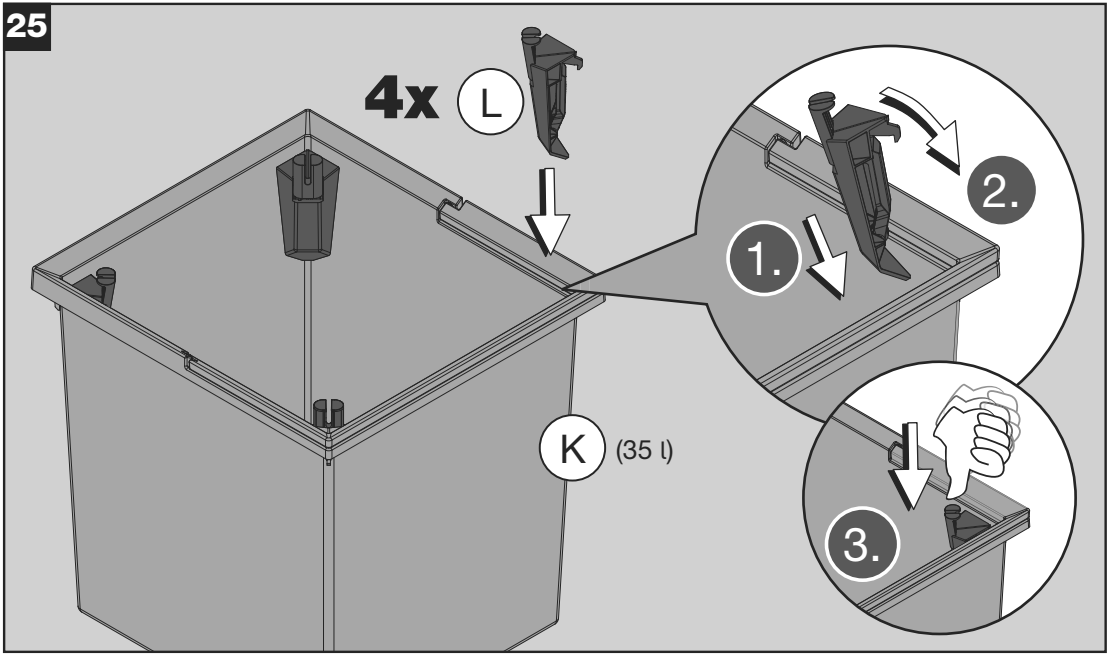
25
4x
L
K
(35 l)
1.
2.
3.

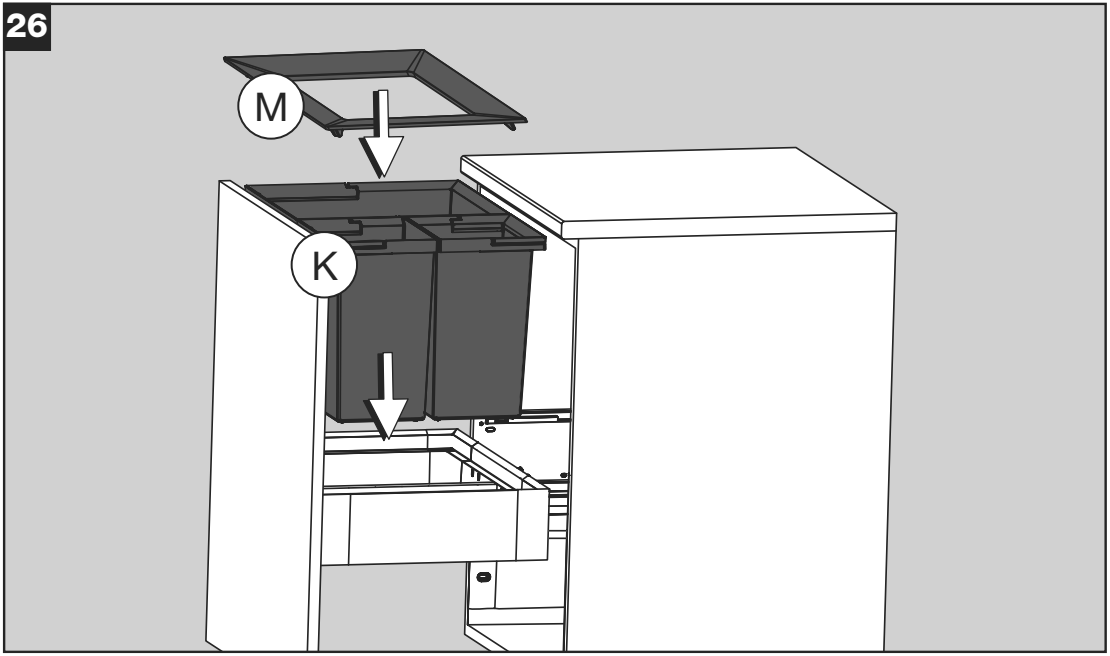
M
K

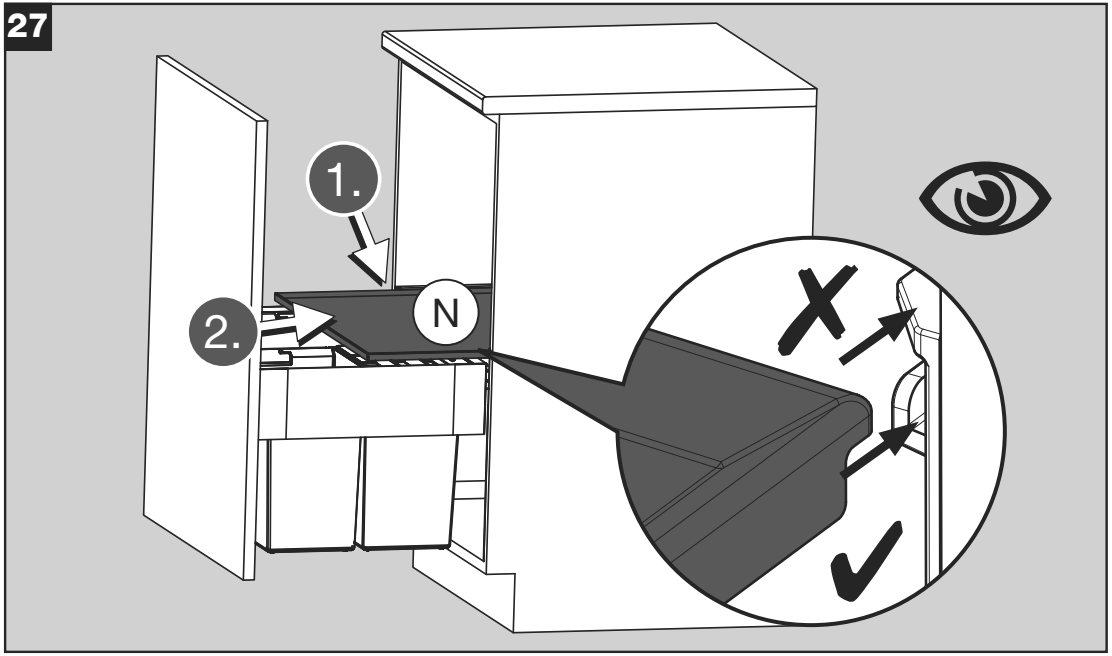
27
1.
2.
N

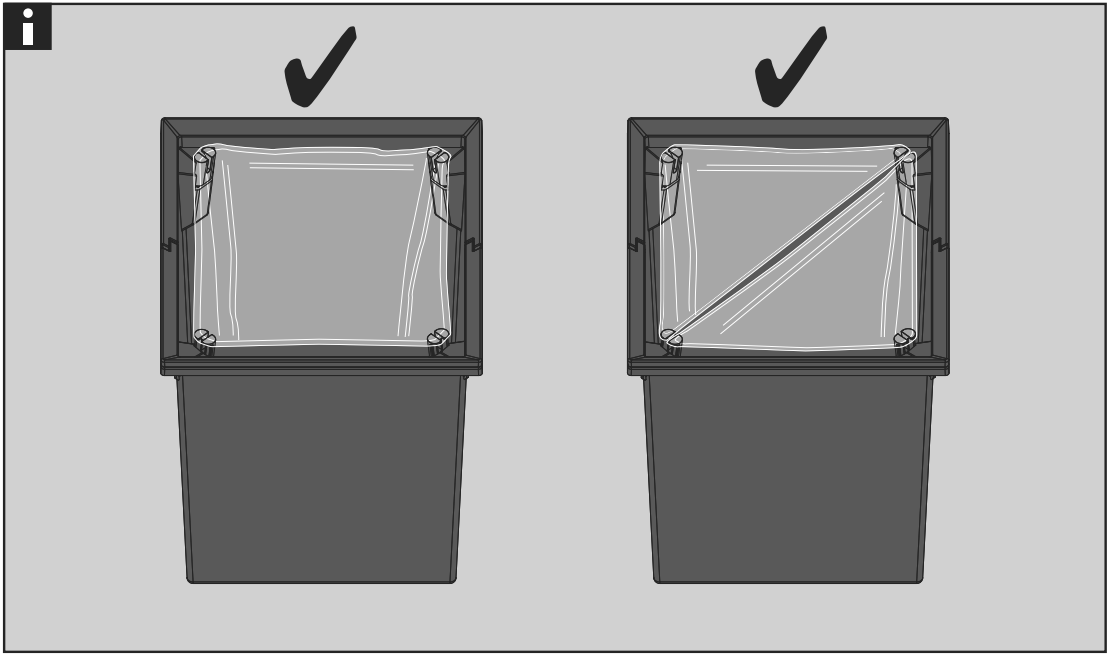

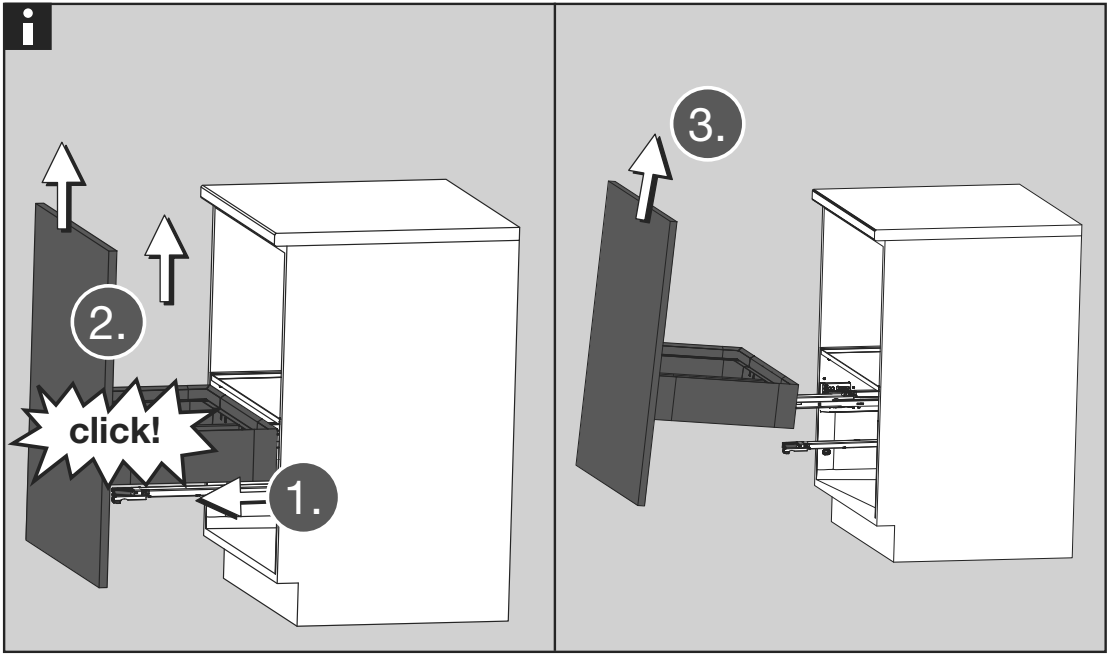
i
2.
click!
1.
3.

BLANCO

BLANCO GmbH + Co KG
Flehinger Str. 59
75038 Oberderdingen
GERMANY
Tel.: +49 7045 44-81 419
service@blanco.com

BLANCO UK Limited
1 Victor Way, Colney Street
St. Albans, AL2 2FL
GREAT BRITAIN
Phone: +44 1923 635 200
aftersales@blanco.co.uk

BLANCO CANADA Inc.
100 Corporation Drive
Brampton, Ontario L6S 6B5
Phone: 1-877-425-2626
service.ca@blanco.com

BLANCO AMERICA Inc.
110 Mount Holly Bypass
Lumberton, New Jersey 08048
Phone: 1-800-451-5782
service.us@blanco.com

BLANCO AUSTRALIA Pty Ltd
C/- Schweizer Kobras
Level 5, 23-25 O'Connell Street
SYDNEY, NSW 2000
Phone: +61 75 5960 894
customerservice.au@blanco.com

BLANCO Trading (Shanghai) Co., Ltd.
021-5835 5662
Room 215-216, Bldg 1, Zhangjiang E-Park,
No. 899 Dangui Road, Pudong, 201203
Shanghai, China
Phone: +86 400-788-2100
info-blancochina@blanco.de

blanco.com

FR TRIEZ RÉEMPLOYEZ RECYCLEZ

ASSOCIATION OU DISTRIBUTEUR OU DÉCHÈTERIE

Adresses sur quefairedemesdechets.fr

129 560 | Rev00 | 2025-12-10 | v09